I-95 Express Lanes – Opitz Boulevard Ramp ("Opitz") Project

Exhibit C-6

Technical Requirements

Attachment 1.0

Opitz Project Scope of Work

7/11/2022 8:59:58 AM
4589300100IAFC.DGN
Plotted By: jlopez-ornelas

LIMITED ACCESS HIGHWAY

By Resolution of the Highway Commission dated October 4, 1956.
By Resolution of the Highway Commission dated January 18, 1973
By Resolution of the Commonwealth Transportation Board dated April 19, 2022

FOR INDEX OF SHEETS SEE SHEET 1B

THIS PROJECT WAS DEVELOPED UTILIZING THE DEPARTMENT'S ENGINEERING DESIGN PACKAGE (OpenRoads).
OpenRoads Computer Identification No. 116663

COMMONWEALTH OF VIRGINIA

DEPARTMENT OF TRANSPORTATION

PLAN AND PROFILE OF PROPOSED STATE HIGHWAY

PRINCE WILLIAM COUNTY
I-95 EXPRESS LANES -
OPITZ BOULEVARD RAMP PROJECT
FROM: 1.323 MI. S. OPITZ BLVD
TO: 0.133 MI. N. OPITZ BLVD

STATE	FEDERAL AID PROJECT	ROUTE	STATE PROJECT	SHEET NO.
VA.	NHPP-095-2 ( ) (SEE TABULATION BELOW FOR SECTION NUMBERS)	95	(F0) 0095-076-299 (SEE TABULATION BELOW FOR SECTION NUMBERS)	1

FHWA 534 DATA 41103
UPC 116663

FUNCTIONAL CLASSIFICATION AND TRAFFIC DATA			
	I-95 SB GP LANES	OPITZ BLVD	I-95 EXPRESS LANES
	GS-INT-ROLLING-70MPH	GS-6-ROLLING-45MPH	GS-R-ROLLING-65MPH
	Fr: SLIP RAMP To: NORTH OF SLIP RAMP	Fr: TELEGRAPH ROAD To: RIVER ROCK WAY	Fr: SOUTH OF SLIP RAMP To: SLIP RAMP
ADT (2019)	66,400	44,200	27,300
ADT (2045)	73,500	52,000	33,400
DHV	3,810	4,070	2,570
D (%) (design hour)	N/A	44%	N/A
T (%) (design hour)	5%	1%	1%
V (MPH)	*	*	*

	OPITZ BLVD EB TO I-95 NB LOOP	I-95 EXPRESS LANES - OPITZ BLVD CONNECTOR RAMP	I-95 SB GP TO EXPRESS LANES SB (SLIP RAMP)
	GS-R-ROLLING-30MPH	GS-R-ROLLING-50MPH	GS-R-ROLLING-50MPH
	Fr: OPITZ BLVD To: I-95 NB	Fr: OPITZ BLVD To: I-95 EXPRESS LANES	Fr: I-95 SB To: I-95 EXPRESS LANES
ADT (2019)	3,600	N/A	2,100
ADT (2045)	3,900	5,000	2,300
DHV	210	360	230
D (%) (design hour)	N/A	N/A	N/A
T (%) (design hour)	2%	1%	1%
V (MPH)	*	*	*

* SEE PLAN & PROFILE SHEET FOR HORIZONTAL AND VERTICAL CURVE DESIGN SPEEDS.

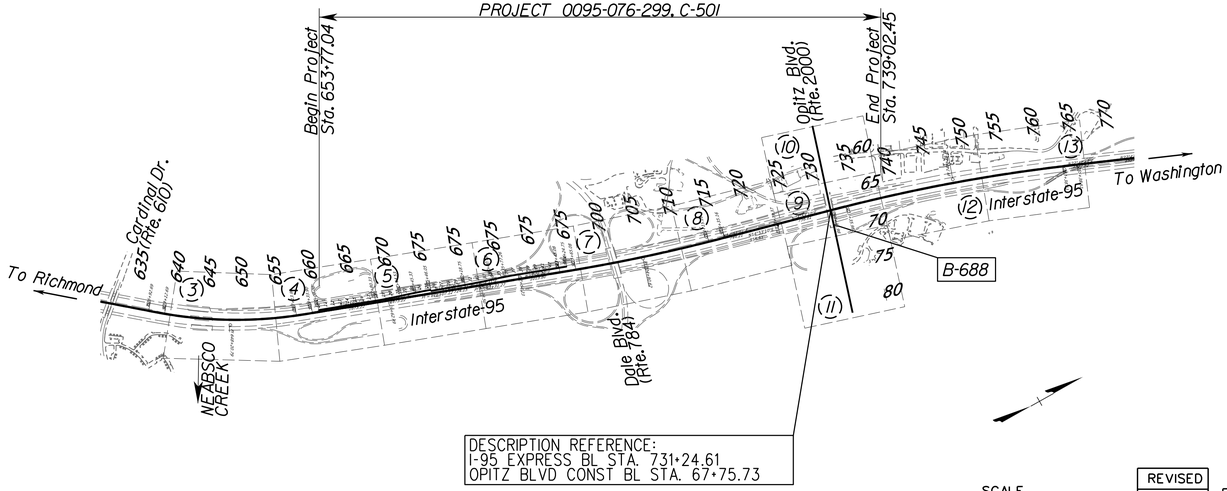

DESCRIPTION REFERENCE:
I-95 EXPRESS BL STA. 731+24.61
OPITZ BLVD CONST BL STA. 67+75.73

SCALE
0 1000' 2000'

A.F.C. PLANS

PROJECT MANAGER Rimpal Shah, P.E. (703) 259-2362 (NOVA District)
SURVEYED BY, DATE H&B Surveying and Mapping, LLC (804) 330-3781, 03/09/2021
DESIGN BY Whitman, Requardt, & Associates, LLP (804) 272-8700
SUBSURFACE UTILITY BY, DATE Accumack, Inc. (804) 550-2740, 07/07/2021

CONVENTIONAL SIGNS

STATE LINE
COUNTY LINE
CITY,TOWN OR VILLAGE
RIGHT OF WAY LINE
FENCE LINE
UNFENCED PROPERTY LINE
FENCED PROPERTY LINE
WATER LINE
SANITARY SEWER LINE
GAS LINE
ELECTRIC UNDERGROUND CABLE
TRAVELED WAY
GUARD RAIL
RETAINING WALL
RAILROADS
BASE OR SURVEY LINE

LEVEE OR EMBANKMENT
BRIDGES
CULVERTS
DROP INLET
POWER POLES
TELEPHONE OR TELEGRAPH POLES
TELEPHONE OR TELEGRAPH LINES
HEDGE
TREES
HEAVY WOODS
GROUND ELEVATION
GRADE ELEVATION

THE COMPLETE ELECTRONIC PDF VERSION OF THE PLAN ASSEMBLY AS AWARDED, HAS BEEN SEALED AND SIGNED USING DIGITAL SIGNATURES AND THE OFFICIAL PLAN ASSEMBLY IN ELECTRONIC FORMAT IS STORED IN THE VDOT CENTRAL OFFICE PLAN LIBRARY, INCLUDING ALL SUBSEQUENT REVISIONS, WILL BE THE OFFICIAL CONSTRUCTION PLANS. FOR INFORMATION RELATIVE TO ELECTRONIC FILES AND LAYERED PLANS, SEE THE GENERAL NOTES.

DESIGN FEATURES RELATING TO CONSTRUCTION OR TO REGULATION AND CONTROL OF TRAFFIC MAY BE SUBJECT TO CHANGE AS DEEMED NECESSARY BY THE DEPARTMENT.

THIS PROJECT IS TO BE CONSTRUCTED IN ACCORDANCE WITH THE DEPARTMENT'S 2020 ROAD AND BRIDGE SPECIFICATIONS, 2016 ROAD AND BRIDGE STANDARDS, 2009 MUTCD, 2011 VIRGINIA SUPPLEMENT TO THE MUTCD, 2011 VIRGINIA WORK AREA PROTECTION MANUAL AND AS AMENDED BY CONTRACT PROVISIONS AND THE COMPLETE ELECTRONIC PDF VERSION OF THE PLAN ASSEMBLY.

ALL CURVES ARE TO BE SUPERELEVATED, TRANSITIONED AND WIDENED IN ACCORDANCE WITH STANDARD TC - 5.11R, EXCEPT WHERE OTHERWISE NOTED.

THE ORIGINAL APPROVED TITLE SHEET(S), INCLUDING ORIGINAL SIGNATURES, ARE FILED IN THE VDOT CENTRAL OFFICE PLAN LIBRARY. ANY MISUSE OF ELECTRONIC FILES, INCLUDING SCANNED SIGNATURES, IS ILLEGAL AND ENFORCED TO THE FULL EXTENT OF THE LAW.

Prince William County Population 482,204 (2020 Census)

STATE PROJECT NO.	SECTION	FEDERAL AID PROJECT NO.	TYPE CODE	UPC NO.	EQUALITIES	LENGTH INCLUDING BRIDGE(S)		LENGTH EXCLUDING BRIDGE(S)		BRIDGE PROJECT NO.	TYPE PROJECT	DESCRIPTION
					FEET	FEET	MILES	FEET	MILES			
0095-076-299												
	C-501	NHPP-095-2(546)	1000	116663	N/A	7,691.05	1.457	7,691.05	1.456		CONSTR.	FR: 1.323 MI. S. OPITZ BLVD TO: 0.133 MI. N. OPITZ BLVD
	B-688	NHPP-095-2(546)	X771	116663	N/A	470	0.09			257-38A	BRIDGE	OPITZ BLVD OVER I-95

Project Lengths are based on I-95 Express Lanes Baseline.

REVISED

RECOMMENDED FOR APPROVAL FOR CONSTRUCTION	
DATE	95 EXPRESS LANES LLC PROJECT MANAGER JORDAN PITT, P.E.
DATE	VDOT PROJECT MANAGER BRIAN C. MORRISON, P.E.
DATE	VDOT MEGAPROJECTS DIRECTOR SUSAN N. SHAW, P.E.

APPROVED FOR CONSTRUCTION	
DATE	VDOT CHIEF ENGINEER BARTON A. THRASHER, P.E.

Copyright 2022, Commonwealth of Virginia

7/11/2022
8:46:50 AM

LIMITED ACCESS HIGHWAY

By Resolution of the Highway Commission dated October 4, 1956.
By Resolution of the Highway Commission dated January 18, 1973
By Resolution of the Commonwealth Transportation Board dated April 19, 2022

PROJECT MANAGER Bimpal Shah, P.E. (703) 259-2362 (NOVA District)
SURVEYED BY, DATE H&B Surveying and Mapping, LLC (804) 330-3781, 03/09/2021
DESIGN BY Whitman, Requardt, & Associates, LLP (804) 272-8700
SUBSURFACE UTILITY BY, DATE Accumark, Inc. (804) 550-7740, 07/07/2021

REVISED	STATE	STATE ROUTE	STATE PROJECT	SHEET NO.
	VA.	95	0095-076-299, C-501	IA

DESIGN FEATURES RELATING TO CONSTRUCTION OR TO REGULATION AND CONTROL OF TRAFFIC MAY BE SUBJECT TO CHANGE AS DEEMED NECESSARY BY THE DEPARTMENT

PROJECT LOCATION MAP

PRINCE WILLIAM COUNTY

AFC PLANS

NOT TO SCALE

PROJECT	SHEET NO.
0095-076-299	IA

LIMITED ACCESS HIGHWAY

By Resolution of the Highway Commission dated October 4, 1956.
By Resolution of the Highway Commission dated January 18, 1973.
By Resolution of the Commonwealth Transportation Board dated April 19, 2022

PROJECT MANAGER Rimpal Shah, P.E. (703) 259-2362 (NOVA District) _____
SURVEYED BY, DATE H&B Surveying and Mapping, LLC (804) 330-3781, 03/09/2021
DESIGN BY Whitman, Requardt, & Associates, LLP (804) 212-8700 _____.
SUBSURFACE UTILITY BY, DATE Accutrark, Inc. (804) 550-7740, 07/07/2021

INDEX OF SHEETS

REVISED	STATE	STATE ROUTE	STATE PROJECT	SHEET NO.
	VA.	95	0095-076-299,C-501	IB

DESIGN FEATURES RELATING TO CONSTRUCTION OR TO REGULATION AND CONTROL OF TRAFFIC MAY BE SUBJECT TO CHANGE AS DEEMED NECESSARY BY THE DEPARTMENT

SHEET NO.	DESCRIPTION	STATIONS
I	TITLE SHEET	
IA	LOCATION MAP	
IB	INDEX OF SHEETS	
IC	PRELIMINARY RIGHT OF WAY DATA SHEET	
ID	REVISION DATA SHEET	
IF	SURVEY ALIGNMENT DATA SHEET	
IG(1) thru IG(6)	CONSTRUCTION ALIGNMENT DATA SHEET	
IK(1) thru IK(5)	SEQUENCE OF CONSTRUCTION NOTES AND TYPICAL SECTIONS	
IL(1) thru IL(9)	TEMPORARY TRAFFIC CONTROL PLAN STAGE 1A	
IN(1) thru IN(8)	TEMPORARY TRAFFIC CONTROL PLAN STAGE 2A	
IP(1) thru IP(5)	TEMPORARY TRAFFIC CONTROL PLAN STAGE 3	
IQ(1) thru IQ(3)	TEMPORARY TRAFFIC CONTROL PLAN STAGE 4	
2	GENERAL NOTES	
2A(1) thru 2A(12)	TYPICAL SECTIONS	
2B(1) thru 2B(4)	DETAIL SHEETS	
2B(5) thru 2B(8)	CURB RAMP STAKING DETAILS	
2B(9)	GENERATOR HII8A SITE GRADING PLAN	
2B(9A) thru 2B(9F)	GENERATOR HII8A SITE CROSS SECTIONS	
2B(10)	GENERATOR HII7A SITE GRADING PLAN	
2B(10A) thru 2B(10J)	GENERATOR HII7A SITE CROSS SECTIONS	
2C(1) thru 2C(4)	SWPPP SHEETS	
2E	EXISTING DRAINAGE PIPE REHABILITATION SUMMARY	
3	PLAN SHEET (95 XBL)	640+25 to 654+25
4	PLAN SHEET (95 XBL)	654+25 to 668+25
4A	PROFILE SHEET (RAMP DBSR)	10+00 TO 17+50
4B	E&S CONTROL PLAN PHASE I (95 XBL)	654+25 to 668+25
5	PLAN SHEET (95 XBL)	668+25 TO 682+25
5A	PROFILE SHEET (RAMP DBSR)	17+50 TO 32+00
5B	E&S CONTROL PLAN PHASE I (95 XBL)	668+25 TO 682+25
6	PLAN SHEET (95 XBL)	682+25 TO 696+25
6A	PROFILE SHEET (RAMP DBSR)	32+00 TO 44+00
6B	E&S CONTROL PLAN PHASE I (95 XBL)	682+25 TO 696+25
7	PLAN SHEET (95 XBL)	696+25 TO 710+25
8	PLAN SHEET (95 XBL)	710+25 TO 724+25
8A	PROFILE SHEET (RAMP OBTR)	15+00 TO 28+25
8B	E&S CONTROL PLAN PHASE I (95 XBL)	710+25 TO 724+25
9	PLAN SHEET (95 XBL AND OPITZ BLVD)	724+25 TO 738+25 64+00 TO 71+00
9A	PROFILE SHEET (OPITZ BLVD)	64+00 TO 71+00
9B	E&S CONTROL PLAN PHASE I (95 XBL AND OPITZ BLVD)	724+25 TO 738+25 64+00 TO 71+00
9C	DETENTION BASIN MODIFICATION DETAILS	
10	PLAN SHEET (OPITZ BLVD)	56+00 TO 64+00
10A	PROFILE SHEET (OPITZ BLVD)	56+00 TO 64+00
10B	E&S CONTROL PLAN PHASE I (OPITZ BLVD)	56+00 TO 64+00
10RW	R/W PLAN SHEET (OPITZ BLVD)	
11	PLAN SHEET (OPITZ BLVD)	71+00 TO 82+00
11A	PROFILE SHEET (OPITZ BLVD)	71+00 TO 82+00
11B	PROFILE SHEET (95 XBL NB LOOP)	50+00 TO 52+77.88
11C	E&S CONTROL PLAN PHASE I (OPITZ BLVD)	71+00 TO 82+00
11RW	R/W PLAN SHEET (OPITZ BLVD)	
12	PLAN SHEET (I-95)	738+25 TO 752+25
13	PLAN SHEET (I-95)	752+25 TO 766+25
14(1) thru 14(2)	DRAINAGE DESCRIPTION SHEETS	
14(3) thru 14(9)	STORM SEWER PROFILES	
15(1) thru 15(13)	TRAFFIC MANAGEMENT SYSTEM (TMS) PLANS	
16(1) thru 16(21)	SIGNING AND PAVEMENT MARKING PLANS	
17(1) thru 17(10)	LIGHTING PLANS	
18(1) thru 18(5)	SIGNAL PLANS	
* 19(1) thru 19(_)	UTILITY PLANS	

TOTAL CROSS SECTION SHEETS 213 (SEE CROSS SECTION SHEET NUMBER 1 FOR INDEX OF SHEETS)

BRIDGE PLANS, B-688, PLAN NO.257-38A (125 SHEETS)
PROPOSED WIDENING ON OPITZ BOULEVARD OVER I-95, 95 EXPRESS LANES

* NOT INCLUDED IN THIS SUBMISSION

AFC PLANS

	PROJECT	SHEET NO.
	0095-076-299	IB

LIMITED ACCESS HIGHWAY By Resolution of the Highway Commission dated October 4, 1956.
By Resolution of the Highway Commission dated January 18, 1973.
By Resolution of the Commonwealth Transportation Board dated April 19, 2022

PROJECT MANAGER Rimpal Shah, P.E. (703) 259-2362 (NOVA District) _____
SURVEYED BY, DATE H&B Surveying and Mapping, LLC (804) 330-3781, 03/09/2021
DESIGN BY Whitman, Requardt, & Associates, LLP (804) 212-8700 _____.
SUBSURFACE UTILITY BY, DATE Accumark, Inc. (804) 550-7740, 07/07/2021

REVISED	STATE	STATE ROUTE	STATE PROJECT	SHEET NO.
	VA.	95	0095-076-299,C-501	IC

DESIGN FEATURES RELATING TO CONSTRUCTION OR TO REGULATION AND CONTROL OF TRAFFIC MAY BE SUBJECT TO CHANGE AS DEEMED NECESSARY BY THE DEPARTMENT

UPC # 116663

RIGHT OF WAY DATA SHEET

Parcel Information					Area: Areas greater than or equal to 1 acre will be shown in acres to 3 decimal places (x.xxx AC). Areas less than 1 acre will be shown in square feet (xx,xxx SF).														
					Fee Take Summary			Permanent Easements					Utility Easements				Temporary			Proffers
Number	Landowner Name	Sheet Number	Deed Acreage	Remainder	Total	Prescriptive	Non-Prescr.	(Dr)ainage	(Si)gn	(Si)gnal						VDOT	Construction			Yes/NO
001	POTOMAC FESTIVAL LIMITED PARTNERSHIP	10,10rw	21.9569 AC	21.9569 AC					100 SF	1772 SF										
002	COMMONWEALTH OF VIRGINIA	10,10rw	0.654 AC	0.515 AC	6070 SF		6070 SF										433 SF			
003	COMMONWEALTH OF VIRGINIA	10,10rw	3.745 AC	3.743 AC	100 SF		100 SF													
	DEPARTMENT OF HIGHWAY																			
004	POTOMAC HOSPITAL CORPORATION	11,11rw	47.9852 AC	47.9852 AC					50 SF											
	OF PRINCE WILLIAM																			
005	THE BOARD OF COUNTY SUPERVISORS	11,11rw																		
	OF PRINCE WILLIAM COUNTY, VIRGINIA																			

SCALE 0 50' 100' | PROJECT 0095-076-299 | SHEET NO. IC

7/11/2022 4589300100Id.DGN
4:04:31 PM Plotted By: jlopez-ornelas

LIMITED ACCESS HIGHWAY

By Resolution of the Highway Commission dated October 4, 1956.
By Resolution of the Highway Commission dated January 18, 1973.
By Resolution of the Commonwealth Transportation Board dated April 19, 2022

PROJECT MANAGER Rimpal Shah, P.E. (703) 259-2362 (NOVA District) _____
SURVEYED BY, DATE H&B Surveying and Mapping, LLC (804) 330-3781, 03/09/2021
DESIGN BY Whitman, Requardt, & Associates, LLP (804) 212-8700 _____.
SUBSURFACE UTILITY BY, DATE Accumark, Inc. (804) 550-7740, 07/07/2021

REVISION DATA SHEET

REVISED	STATE	STATE ROUTE	STATE PROJECT	SHEET NO.
	VA.	95	0095-076-299,C-501	ID

DESIGN FEATURES RELATING TO CONSTRUCTION
OR TO REGULATION AND CONTROL OF TRAFFIC
MAY BE SUBJECT TO CHANGE AS DEEMED
NECESSARY BY THE DEPARTMENT

State Project: 0095-076-299, C-501,B-688
Federal Project: NHPP-095-2 (546)
From: 1.323 MILES SOUTH OF OPITZ BOULEVARD
To: 0.133 MILES NORTH OF OPITZ BOULEVARD
UPC Number: 116663

AFC PLANS

	PROJECT	SHEET NO.
	0095-076-299	ID

Cell Revised 12/11/12

7/11/2022
8:47:39 AM

LIMITED ACCESS HIGHWAY

By Resolution of the Highway Commission dated October 4, 1956.
By Resolution of the Highway Commission dated January 18, 1973
By Resolution of the Commonwealth Transportation Board dated April 19, 2022

PROJECT MANAGER Bimpal Shah, P.E. (703) 259-2362 (NOVA District)
SURVEYED BY, DATE H&B Surveying and Mapping, LLC (804) 330-3781, 03/09/2021
DESIGN BY Whitman, Requardt, & Associates, LLP (804) 272-8700
SUBSURFACE UTILITY BY, DATE Accumark, Inc. (804) 550-7740, 07/07/2021

SURVEY ALIGNMENT DATA SHEET

REVISED	STATE	STATE ROUTE	STATE PROJECT	SHEET NO.
	VA.	95	0095-076-299, C-501	IF

DESIGN FEATURES RELATING TO CONSTRUCTION OR TO REGULATION AND CONTROL OF TRAFFIC MAY BE SUBJECT TO CHANGE AS DEEMED NECESSARY BY THE DEPARTMENT

LD-200 (REV. 8/2000)

Virginia Department of Transportation Horizontal Control

Control Station I.D. 076 - 2058 Project 0095-96A-107, P101 — V.D.O.T. Project Coordinates
Route: 95 City/County: Prince William Date: Sept. 2006
Established By B&N
Vertical Datum Based On NAVD 88 Geoid 03 (circle one)
Horizontal Datum Based On NAD 83(93) (circle one)
Azimuth to Station 076-2059: 282° 23' 39.59" 818,445' (Surface)
Latitude: 38° 39' 22.79194" N (5 decimal places)
Longitude: 77° 16' 43.29562" W (5 decimal places)
Geoid Separation (N): -32.1749
Ellipsoid Height (h): 45.9618 m (WGS 84)
Control Based on: Station (name or PID) or DG4541
Project (monument no.): Order: B
Virginia State Plane Coordinates - NAD 83 Metric Values
East (X) 3,606,298.6965 m
North (Y) 2,110,558.7083 m
Ortho. Elevation 78.367 m

East (X) 3,629,799.42 ft.
North (Y) 362,746.46 ft.
Elevation 256.35 ft.
Zone: North
Horizontal Closure:

To convert state plane metric units to VDOT project values, use the following formula.

1. Reduce the Easting Metric Values By 2.5 Million Meters. The South and North Zone Northing Metric Values By 1 and 2 Million Respectively.
2. Multiply These Values by the U.S. Survey Foot (3.280833333)
3. Multiply These Values by Combined Scale and Elevation Factor (1.000006) for the County.

Reverse This Proceedure to Transform VDOT Project Coordinates to NAD 83 Metric Plane Coordinates

Sketch and Detailed Description on Other Side

Detailed Description: The station is a standard VDOT Disk set in concrete flush with the ground and stamped 076-2058. To reach the station from I-95 South take Exit 158A to Prince William Parkway East. Proceed over overpass to station in the median.

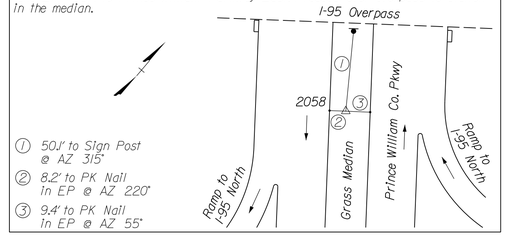

① 50.1' to Sign Post @ AZ 315°
② 8.2' to PK Nail In EP @ AZ 220°
③ 9.4' to PK Nail In EP @ AZ 55°

LD-200 (REV. 8/2000)

Virginia Department of Transportation Horizontal Control

Control Station I.D. 076 - 2059 Project 0095-96A-107, P101 — V.D.O.T. Project Coordinates
Route: 95 City/County: Prince William Date: Sept. 2006
Established By B&N
Vertical Datum Based On NAVD 88 Geoid 03 (circle one)
Horizontal Datum Based On NAD 83(93) (circle one)
Azimuth to Station 076-2058: 102° 23' 39.59" 818,445' (Surface)
Latitude: 38° 39' 24.63919" N (5 decimal places)
Longitude: 77° 16' 53.34215" W (5 decimal places)
Geoid Separation (N): -32.1694
Ellipsoid Height (h): 41.6405 m (WGS 84)
Control Based on: Station (name or PID) or DG4541
Project (monument no.): Order: B
Virginia State Plane Coordinates - NAD 83 Metric Values
East (X) 3,606,055.0632 m
North (Y) 2,110,612.2493 m
Ortho. Elevation 73.8099 m

East (X) 3,629,000.05 ft.
North (Y) 362,922.13 ft.
Elevation 242.16 ft.
Zone: North
Horizontal Closure:

To convert state plane metric units to VDOT project values, use the following formula.

1. Reduce the Easting Metric Values By 2.5 Million Meters. The South and North Zone Northing Metric Values By 1 and 2 Million Respectively.
2. Multiply These Values by the U.S. Survey Foot (3.280833333)
3. Multiply These Values by Combined Scale and Elevation Factor (1.000006) for the County.

Reverse This Proceedure to Transform VDOT Project Coordinates to NAD 83 Metric Plane Coordinates

Sketch and Detailed Description on Other Side

Detailed Description: The station is a standard VDOT Disk set in concrete flush with the ground and stamped 076-2059. To reach the station from I-95 South take Exit 158B to end of ramp at Prince William Parkway. The station is on the left in the grass median.

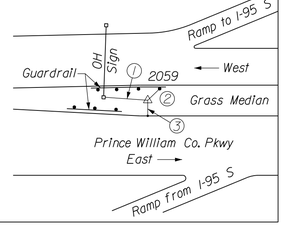

① 50.1' to Overhead Sign Post @ AZ 270°
② 8.2' to PK Nail In Guardrail Post @ AZ 45°
③ 9.1' to PK Nail In EP @ AZ 180°

LD-200 (REV. 8/2000)

Virginia Department of Transportation Horizontal Control

Control Station I.D. 076 - 2060 Project 0095-96A-107, P101 — V.D.O.T. Project Coordinates
Route: 95 City/County: Prince William Date: Sept. 2006
Established By B&N
Vertical Datum Based On NAVD 88 Geoid 03 (circle one)
Horizontal Datum Based On NAD 83(93) (circle one)
Azimuth to Station 076-2061: 108° 27' 02.75" 778.95' (Surface)
Latitude: 38° 34' 45.93572" N (5 decimal places)
Longitude: 77° 19' 19.60224" W (5 decimal places)
Geoid Separation (N): -32.2849
Ellipsoid Height (h): 18.9246 m (WGS 84)
Control Based on: Station (name or PID) or DG4541
Project (monument no.): Order: B
Virginia State Plane Coordinates - NAD 83 Metric Values
East (X) 3,602,629.4268 m
North (Y) 2,101,973.2546 m
Ortho. Elevation 51.2095 m

East (X) 3,617,760.44 ft.
North (Y) 334,577.33 ft.
Elevation 168.01 ft.
Zone: North
Horizontal Closure:

To convert state plane metric units to VDOT project values, use the following formula.

1. Reduce the Easting Metric Values By 2.5 Million Meters. The South and North Zone Northing Metric Values By 1 and 2 Million Respectively.
2. Multiply These Values by the U.S. Survey Foot (3.280833333)
3. Multiply These Values by Combined Scale and Elevation Factor (1.000006) for the County.

Reverse This Proceedure to Transform VDOT Project Coordinates to NAD 83 Metric Plane Coordinates

Sketch and Detailed Description on Other Side

Detailed Description: The station is a standard VDOT Disk set in concrete flush with the ground and stamped 076-2060. To reach the station from I-95 South take Exit 152B. The station is located at the end of the ramp and Route 234 on the left.

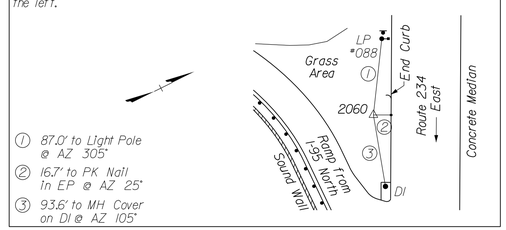

① 87.0' to Light Pole @ AZ 305°
② 16.7' to PK Nail In EP @ AZ 25°
③ 93.6' to MH Cover on DI @ AZ 105°

LD-200 (REV. 8/2000)

Virginia Department of Transportation Horizontal Control

Control Station I.D. 076 - 2061 Project 0095-96A-107, P101 — V.D.O.T. Project Coordinates
Route: 95 City/County: Prince William Date: Sept. 2006
Established By B&N
Vertical Datum Based On NAVD 88 Geoid 03 (circle one)
Horizontal Datum Based On NAD 83(93) (circle one)
Azimuth to Station 076-2060: 288° 27' 02.75" 778.95' (Surface)
Latitude: 38° 34' 43.40537" N (5 decimal places)
Longitude: 77° 19' 10.33816" W (5 decimal places)
Geoid Separation (N): -32.2907
Ellipsoid Height (h): 14.8479 m (WGS 84)
Control Based on: Station (name or PID) or DG4541
Project (monument no.): Order: B
Virginia State Plane Coordinates - NAD 83 Metric Values
East (X) 3,602,854.6343 m
North (Y) 2,101,898.1188 m
Ortho. Elevation 47.1386 m

East (X) 3,618,499.35 ft.
North (Y) 334,330.80 ft.
Elevation 154.65 ft.
Zone: North
Horizontal Closure:

To convert state plane metric units to VDOT project values, use the following formula.

1. Reduce the Easting Metric Values By 2.5 Million Meters. The South and North Zone Northing Metric Values By 1 and 2 Million Respectively.
2. Multiply These Values by the U.S. Survey Foot (3.280833333)
3. Multiply These Values by Combined Scale and Elevation Factor (1.000006) for the County.

Reverse This Proceedure to Transform VDOT Project Coordinates to NAD 83 Metric Plane Coordinates

Sketch and Detailed Description on Other Side

Detailed Description: The station is a standard VDOT Disk set in concrete flush with the ground and stamped 076-2061. The station is located at the intersection of Route 234 and Green Tree Lane in the grass island for I-95 ramps.

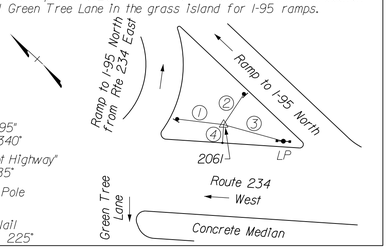

① 43.2' to "To -95" Sign @ AZ 340°
② 37.5' to "Adopt Highway" Sign @ AZ 85°
③ 93.6' to Light Pole @ AZ 145°
④ 24.2' to PK Nail In EP @ AZ 225°

VDOT Project Coordinates : NAD 83 - Feet - Traverse "1

Point ID	Bearing & Distance	Northing	Easting	Elevation	Description
1		356,291.250	3,624,049.193	248.410	T-Bar
	S 65°03'23" E 1,257.57'				
2		355,760.899	3,625,189.456	225.618	T-Bar
	S 70°56'35" E 279.14'				
10		355,669.757	3,625,453.299	221.074	T-Bar
	S 72°55'15" E 268.46'				
11		355,590.911	3,625,709.923	213.952	T-Bar
	S 70°31'51" E 246.62'				
12		355,508.713	3,625,942.441	211.134'	T-Bar
	S 81°38'33" E 472.07'				
13		355,440.096	3,626,409.503	217.051	T-Bar
	S 73°22'17" E 277.75'				
5		355,360.606	3,626,675.622	217.417	Drill Hole
	S 72°00'24" E 209.79'				
14		355,295.807	3,626,875.171	213.018	T-Bar
	S 63°10'52" E 307.45'				
15		355,157.094	3,627,149.549	202.426	T-Bar
	S 75°19'17" E 307.06'				
16		355,079.287	3,627,446.586	193.977	T-Bar
	S 81°04'53" E 258.91'				
17		355,039.148	3,627,702.368	188.236	Rod & Cap
	S 81°46'07" E 378.66'				
3		354,984.935	3,628,077.128	182.044	T-Bar
	S 63°44'43" E 622.34'				
4		354,709.656	3,628,635.229	170.936	T-Bar

AFC PLANS

PROJECT	SHEET NO.
0095-076-299	IF

LIMITED ACCESS HIGHWAY By Resolution of the Highway Commission dated October 4, 1956.
By Resolution of the Highway Commission dated January 18, 1973.
By Resolution of the Commonwealth Transportation Board dated April 19, 2022

PROJECT MANAGER Rimpal Shah, P.E. (703) 259-2362 (NOVA District) _____
SURVEYED BY, DATE H&B Surveying and Mapping, LLC (804) 330-3781, 03/09/2021
DESIGN BY Whitman, Requardt, & Associates, LLP (804) 212-8700 _____.
SUBSURFACE UTILITY BY, DATE Accumark, Inc. (804) 550-2740, 07/07/2021

COMMONWEALTH OF VIRGINIA
MITCHELL F. JOHNSON
Lic. No. 023838
PROFESSIONAL ENGINEER

Mitchell F Johnson
2022.07.13 18:51:10 -04'00'

Whitman, Requardt & Associates
Richmond, Virginia
ROADWAY ENGINEER

REVISED	STATE	STATE ROUTE	STATE PROJECT	SHEET NO.
	VA.	95	0095-076-299,C-501	IG(1)

DESIGN FEATURES RELATING TO CONSTRUCTION OR TO REGULATION AND CONTROL OF TRAFFIC MAY BE SUBJECT TO CHANGE AS DEEMED NECESSARY BY THE DEPARTMENT

CURVE DATA SUMMARY

Curve No. / POT	Location	Delta	R	T	L	Tangent Bearing		Begin Curve	Coordinates		PI Station	Coordinates		End Curve	Coordinates		V	SE
						Back	Forward	Station	North	East		North	East	Station	North	East	(mph)	(ft/ft)
POB							N40°11'55.01"E				253+26.89	344239.3040	3621130.8380					
I-95 SBL-1	I-95 SB	20°09'59.04"	5729.58	1018.86	2016.64	N40°11'55.01"E	N20°01'55.97"E	287+10.38	346823.6536	3623314.6757	297+29.24	347601.8711	3623972.2882	307+27.02	348559.0906	3624321.2972		
I-95 SBL-2		5°09'37.02"	22861.51	1030.20	2059.00	N20°01'55.97"E	N14°52'18.96"E	342+58.68	351877.0841	3625531.0612	352+88.88	352844.9526	3625883.9529	363+17.68	353840.6381	3626148.3622		
I-95 SBL-3		7°55'19.06"	23030.99	1594.72	3184.36	N14°52'18.96"E	N22°47'38.02"E	380+45.43	355510.5136	3626591.8058	396+40.15	357051.8167	3627001.1065	412+29.79	358521.9992	3627618.9299		
POE						N22°47'38.02"E					478+83.61	364656.1780	3630196.7320					
POB							N40°11'55.00"E				251+32.85	344006.1510	3621242.7940					
I-95 NBL-1	I-95 NB	20°09'59.01"	5729.58	1018.86	2016.64	N40°11'55.00"E	N20°01'55.99"E	284+90.08	346570.4440	3623409.6830	295+08.94	347348.6612	3624067.2952	305+06.72	348305.8803	3624416.3041		
I-95 NBL-2		05°09'36.94"	23037.51	1038.12	2074.84	N20°01'55.99"E	N14°52'19.04"E	342+43.75	351816.8259	3625696.4201	352+81.87	352792.1416	3626052.0272	363+18.59	353795.4883	3626318.4713		
I-95 NBL-3		07°55'18.96"	22854.94	1582.53	3160.01	N14°52'19.04"E	N22°47'38.01"E	380+46.33	355465.3575	3626761.9141	396+28.86	356994.8735	3627168.0853	412+06.34	358453.8129	3627781.1839		
POE						N22°47'38.01"E					479+75.91	364694.7040	3630403.8300					
XBL-1	95XPL	18°00'43.49"	5729.58	908.10	1801.21	N39°06'00.29"E	N21°05'16.79"E	639+12.70	346784.4935	3623433.5218	648+20.79	347489.2170	3624006.2367	657+13.90	348336.4964	3624332.9707		
XBL-2		04°37'08.11"	22949.51	925.54	1850.08	N19°44'53.55"E	N15°07'45.43"E	695+65.08	351954.6879	3625652.1237	704+90.62	352825.7964	3625964.8528	714+15.16	353719.2594	3626206.4176		
XBL-3		07°24'54.68"	23200.00	1503.36	3002.53	N15°07'59.16"E	N22°32'53.84"E	733+35.98	355575.5833	3626699.9792	748+39.34	357026.8145	3627092.4510	763+38.51	358415.2573	3627668.9342		
OBTR-1	OBTR	00°45'01.98"	22925.51	150.16	300.31	N16°08'06.58"E	N15°23'04.61"E	6+99.66	353337.9389	3626074.7990	8+49.82	353482.1830	3626116.5288	9+99.97	353626.9613	3626156.3656	50	NC
OBTR-2		03°52'06.35"	6000.00	202.63	405.10	N15°23'04.61"E	N11°30'58.26"E	9+99.97	353626.9613	3626156.3656	12+02.60	353822.3281	3626210.1221	14+05.07	354020.8764	3626250.5756	50	0.0200
OBTR-3		02°37'50.62"	8000.00	183.69	367.32	N11°30'58.26"E	N14°08'48.87"E	14+05.07	354020.8764	3626250.5756	15+88.77	354200.8700	3626287.2487	17+72.39	354378.9908	3626332.1446	50	NC
OBTR-4		01°00'35.16"	8150.00	71.82	143.63	N14°08'48.87"E	N13°08'13.72"E	17+72.39	354378.9908	3626332.1446	18+44.21	354448.6313	3626349.6977	19+16.03	354518.5703	3626366.0208	50	NC
OBTR-5		01°44'05.24"	8175.00	123.77	247.52	N13°08'13.72"E	N14°52'18.96"E	19+16.03	354518.5703	3626366.0208	20+39.80	354639.1010	3626394.1515	21+63.55	354758.7248	3626425.9182	50	NC
PI						N14°52'18.96"E					22+00.00	354793.9557	3626435.2740					
PI							N14°52'18.96"E				22+00.00	354790.8758	3626446.8720					
POE						N14°52'18.96"E					28+13.77	355384.0841	3626604.4014					
POT	I-95 NB Ramp						S72°47'08.00"E				50+00.00	355239.1901	3626869.0413					
I-95 NB LOOP-1		25°30'10.63"	330.00	74.68	146.89	S72°47'08.00"E	S47°16'57.37"E	51+30.99	355200.4224	3626994.1678	52+05.67	355178.3209	3627065.5027	52+77.88	355127.6590	3627120.3710	35	0.0400
POB	DBSR						N19°59'16.79"E				10+00.00	348638.2830	3624418.7002					
DBSR-1		03°28'13.10"	6013.00	182.15	364.20	N19°59'16.79"E	N16°31'03.69"E	17+80.33	349371.6136	3624685.4368	19+62.49	349542.7956	3624747.7014	21+44.53	349717.4327	3624799.4899	50	0.0200
DBSR-2		02°49'01.91"	8166.00	200.80	401.52	N16°31'03.69"E	N19°20'05.60"E	21+44.53	349717.4327	3624799.4899	23+45.33	349909.9451	3624856.5793	25+46.05	350099.4189	3624923.0616	50	NC
PI						N19°20'05.60"E	N19°20'05.60"E				25+46.05	350094.1215	3624938.1592					
DBSR-3		02°40'34.53"	8166.00	190.75	381.43	N19°20'05.60"E	N16°39'31.06"E	30+18.75	350540.1665	3625094.6669	32+09.50	350720.1578	3625157.8221	34+00.18	350902.9017	3625212.5041	50	NC
DBSR-4		03°22'24.91"	6013.00	177.07	354.05	N16°39'31.06"E	N20°01'55.97"E	34+00.18	350902.9017	3625212.5041	35+77.26	351072.5443	3625263.2658	37+54.23	351238.9057	3625323.9224	50	0.0200
POE						N20°01'55.97"E					44+24.75	351868.8629	3625553.6092					
POB	OPITZ BLVD						S72°47'08.00"E				56+00.00	355719.3363	3625522.3424				50	
POE						S72°47'08.00"E					82+00.00	354949.8692	3628005.8722				50	

AFC PLANS

	PROJECT	SHEET NO.
	0095-076-299	IG(1)

LIMITED ACCESS HIGHWAY

By Resolution of the Highway Commission dated October 4, 1956.
By Resolution of the Highway Commission dated January 18, 1973.
By Resolution of the Commonwealth Transportation Board dated April 19, 2022

PROJECT MANAGER Rimpal Shah, P.E. (703) 259-2362 (NOVA District) _____
SURVEYED BY, DATE H&B Surveying and Mapping, LLC (804) 330-3781, 03/09/2021
DESIGN BY Whitman, Requardt, & Associates, LLP (804) 212-8700 _____.
SUBSURFACE UTILITY BY, DATE Accumark, Inc. (804) 550-7740, 07/07/2021

COMMONWEALTH OF VIRGINIA
MITCHELL F. JOHNSON
Lic. No. 023838
PROFESSIONAL ENGINEER

Mitchell F Johnson
2022.07.13 18:52:26 -04'00

Whitman, Requardt & Associates
Richmond, Virginia
ROADWAY ENGINEER

REVISED	STATE	STATE ROUTE	STATE PROJECT	SHEET NO.
	VA.	95	0095-076-299,C-501	IG(2)

DESIGN FEATURES RELATING TO CONSTRUCTION OR TO REGULATION AND CONTROL OF TRAFFIC MAY BE SUBJECT TO CHANGE AS DEEMED NECESSARY BY THE DEPARTMENT

SPIRAL CURVE DATA SUMMARY

Curve No. / PI	Location	Delta	Spiral Length	Long Tangent	Short Tangent	Tangent Bearing		Begin Spiral	Coordinates		Spiral PI Station	Coordinates		End Spiral Station	Coordinates		V (mph)	SE (ft/ft)
						Back	Forward		North	East		North	East		North	East		
PI	95XPL						N40°12'00.28"E				605+37.54	344205.6661	3621256.0809					
XBL-1		01°06'00.00"	220.00	146.67	73.34	N40°12'00.28"E	N39°06'00.29"E	636+92.70	346615.5560	3623292.6014	638+39.36	346727.5815	3623387.2705	639+12.70	346784.4935	3623433.5218		
XBL-1		01°06'00.00"	220.00	146.67	73.34	N21°05'16.79"E	N19°59'16.79"E	657+13.90	348336.4964	3624332.9707	657+87.24	348404.9210	3624359.3571	659+33.90	348542.7557	3624409.4921		
PI						N19°59'16.79"E	N20°04'31.30"E				676+07.12	350115.1875	3624981.4375					
PI						N20°04'31.30"E	N20°01'22.20"E				683+31.27	350795.3390	3625230.0060					
XBL-2		00°16'28.65"	220.00	146.67	73.33	N20°01'22.20"E	N19°44'53.55"E	693+45.08	351747.8656	3625577.1273	694+91.74	351885.6674	3625627.3452	695+65.08	351954.6879	3625652.1237		
XBL-2		00°16'28.65"	220.00	146.67	73.33	N15°07'45.43"E	N14°51'16.78"E	714+15.16	353719.2594	3626206.4176	714+88.49	353790.0511	3626225.5575	716+35.16	353931.8163	3626263.1582		
PI						N14°51'16.78"E	N14°53'10.08"E				723+79.37	354651.1510	3626453.9490					
XBL-3		00°14'49.07"	200.00	133.33	66.67	N14°53'10.08"E	N15°07'59.16"E	731+35.98	355382.3698	3626648.3218	732+69.31	355511.2283	3626682.5750	733+35.98	355575.5833	3626699.9792		
XBL-3		00°14'49.07"	200.00	133.33	66.67	N22°32'53.84"E	N22°47'42.91"E	763+38.51	358415.2573	3627668.9342	764+05.18	358476.8278	3627694.4984	765+38.51	358599.7473	3627746.1570		
PI						N22°47'42.91"E	N22°43'25.03"E				780+66.04	360007.9653	3628337.9801					
PI						N22°43'25.03"E					790+80.79	360943.9531	3628729.9657					

AFC PLANS

	PROJECT	SHEET NO.
	0095-076-299	IG(2)

LIMITED ACCESS HIGHWAY

By Resolution of the Highway Commission dated October 4, 1956.
By Resolution of the Highway Commission dated January 18, 1973
By Resolution of the Commonwealth Transportation Board dated April 19, 2022

PROJECT MANAGER Bimpal Shah, P.E. (703) 259-2362 (NOVA District)
SURVEYED BY, DATE H&B Surveying and Mapping, LLC (804) 330-3781, 03/09/2021
DESIGN BY Whitman, Requardt, & Associates, LLP (804) 272-8700
SUBSURFACE UTILITY BY, DATE Accumark, Inc. (804) 550-7740, 07/07/2021

COMMONWEALTH OF VIRGINIA
MITCHELL F. JOHNSON
Lic. No. 023838
PROFESSIONAL ENGINEER

Mitchell F Johnson
2022.07.13 19:07:56 -04'00'

Whitman, Requardt & Associates
Richmond, Virginia
ROADWAY ENGINEER

REVISED	STATE	STATE ROUTE	STATE PROJECT	SHEET NO.
	VA.	95	0095-076-299, C-501	IG(3)

DESIGN FEATURES RELATING TO CONSTRUCTION OR TO REGULATION AND CONTROL OF TRAFFIC MAY BE SUBJECT TO CHANGE AS DEEMED NECESSARY BY THE DEPARTMENT

CONSTRUCTION ALIGNMENT DATA SHEET

CURVE I-95 SBL-1
PI = 297+29.24
DELTA = 20°09'59.04" (LT)
D = 01°00'00"
T = 1,018.86'
L = 2,016.64'
R = 5,729.58'
PC = 287+10.38
PT = 307+27.02
V= 70 mph

CURVE 95 NBL-1
PI = 295+08.94
DELTA = 20°09'59.01" (LT)
D = 01°00'00"
T = 1,018.86'
L = 2,016.64'
R = 5,729.58'
PC = 284+90.08
PT = 305+06.72
V= 70 mph

CURVE 95 XBL-1
PI = 648+20.79
DELTA = 18°00'43.49" (LT)
D = 01°00'00"
T = 908.10'
L = 1,801.21'
R = 5,729.58'
PC = 639+12.70
PT = 657+13.90
Ls = 220.00
Θs = 01°06'00"
P = 0.35
K = 110.00
Xs = 219.99
Ys = 1.41
LT = 146.67
ST = 73.34
LC = 220.00
V= 65 MPH

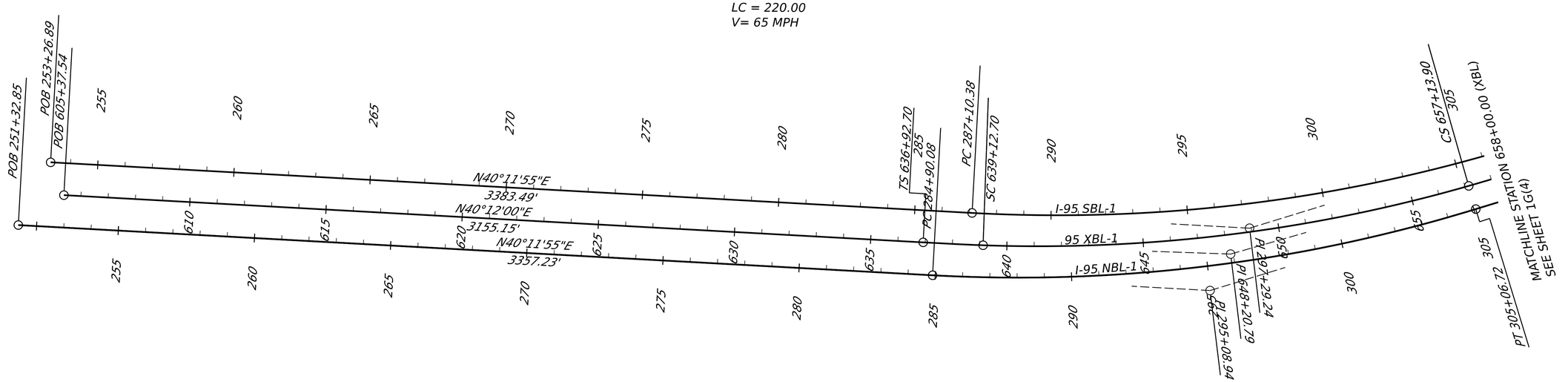

AFC PLANS

SCALE
0 200' 400'

PROJECT	SHEET NO.
0095-076-299	IG(3)

7/11/2022
8:48:48 AM

LIMITED ACCESS HIGHWAY

By Resolution of the Highway Commission dated October 4, 1956.
By Resolution of the Highway Commission dated January 18, 1973
By Resolution of the Commonwealth Transportation Board dated April 19, 2022

PROJECT MANAGER Bimpal Shah, P.E. (703) 259-2362 (NOVA District)
SURVEYED BY, DATE H&B Surveying and Mapping, LLC (804) 330-3781, 03/09/2021
DESIGN BY Whitman, Requardt, & Associates, LLP (804) 272-8700
SUBSURFACE UTILITY BY, DATE Accumark, Inc. (804) 550-7740, 07/07/2021

CONSTRUCTION ALIGNMENT DATA SHEET

REVISED	STATE	STATE ROUTE	STATE PROJECT	SHEET NO.
	VA.	95	0095-076-299, C-501	IG(4)

MITCHELL F. JOHNSON
Lic. No. 023838
COMMONWEALTH OF VIRGINIA
PROFESSIONAL ENGINEER

Mitchell F Johnson
2022.07.13 19:08:50 -04'00'

Whitman, Requardt & Associates
Richmond, Virginia
ROADWAY ENGINEER

DESIGN FEATURES RELATING TO CONSTRUCTION OR TO REGULATION AND CONTROL OF TRAFFIC MAY BE SUBJECT TO CHANGE AS DEEMED NECESSARY BY THE DEPARTMENT

CURVE I-95 SBL-2
PI = 352+88.88
DELTA = 05°09'37.02" (LT)
D = 00°49'20"
T = 1,030.20'
L = 2,059.00'
R = 22,861.51'
PC = 342+58.68
PT = 363+17.68
V= 70 mph

CURVE I-95 NBL-2
PI = 352+81.87
DELTA = 05°09'36.94" (LT)
D = 00°48'57"
T = 1,038.12'
L = 2,074.84'
R = 23,037.51'
PC = 342+43.75
PT = 363+18.59
V= 70 mph

CURVE 95 XBL-2
PI = 704+90.62
DELTA = 04°37'08.11" (LT)
D = 00°14'59"
T = 925.54'
L = 1,850.08'
R = 22,949.51'
PC = 695+65.08
PT = 714+15.16
Ls = 220.00
Θs = 00°16'29"
P = 0.88
K = 110.00
Xs = 220.00
Ys = 0.35
LT = 146.67
ST = 73.33
LC = 220.00
V= 65 mph

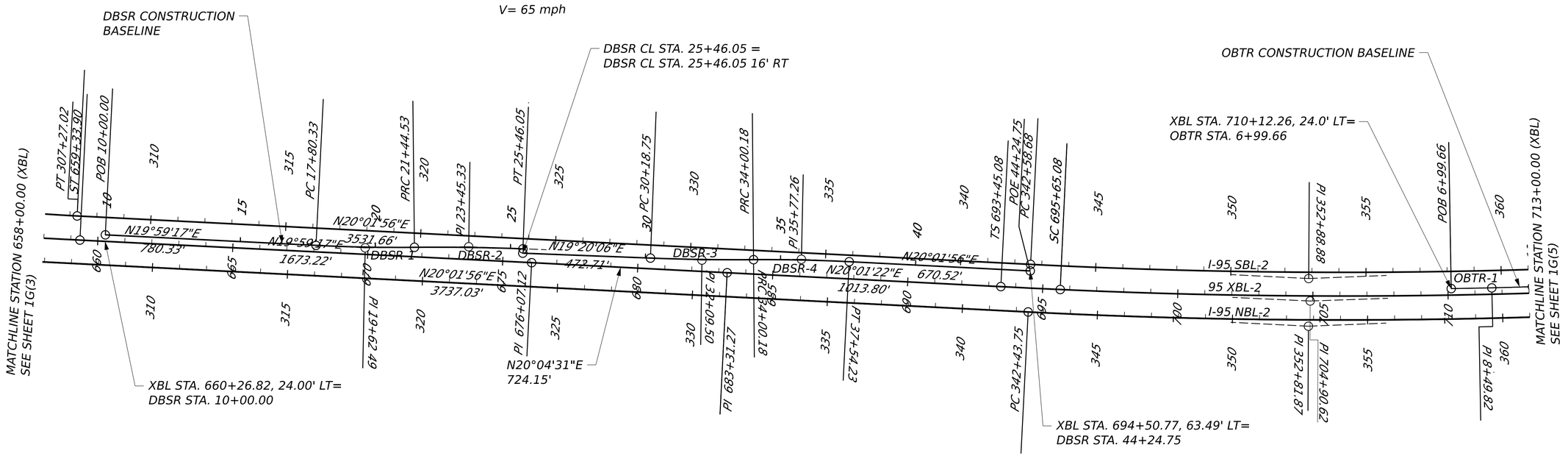

CURVE DBSR-1
PI = 19+62.49
DELTA = 03°28'13.10" (LT)
D = 00°57'10"
T = 182.15'
L = 364.20'
R = 6,013.00'
PC = 17+80.33
PT = 21+44.53
e = 2.0%
V = 50 MPH

CURVE DBSR-2
PI = 23+45.33
DELTA = 02°49'01.91" (RT)
D = 00°42'06"
T = 200.80'
L = 401.52'
R = 8,166.00'
PC = 21+44.53
PT = 25+46.05
e = NC
V = 50 MPH

CURVE DBSR-3
PI = 32+09.50
DELTA = 02°40'34.53" (LT)
D = 00°42'06"
T = 190.75'
L = 381.43'
R = 8,166.00'
PC = 30+18.75
PT = 34+00.18
e = NC
V = 50 MPH

CURVE DBSR-4
PI = 35+77.26
DELTA = 03°22'24.91" (RT)
D = 00°57'10"
T = 177.07'
L = 354.05'
R = 6,013.00'
PC = 34+00.18
PT = 37+54.23
e = 2.0%
V = 50 MPH

CURVE OBTR-1
PI = 8+49.82
DELTA = 00°45'01.98" (LT)
D = 00°15'00"
T = 150.16'
L = 300.31'
R = 22,925.51'
PC = 6+99.66
PT = 9+99.97
e = NC
V = 50 MPH

AFC PLANS

SCALE
0 200' 400'

PROJECT	SHEET NO.
0095-076-299	IG(4)

7/11/2022
8:49:21 AM

LIMITED ACCESS HIGHWAY

By Resolution of the Highway Commission dated October 4, 1956.
By Resolution of the Highway Commission dated January 18, 1973
By Resolution of the Commonwealth Transportation Board dated April 19, 2022

PROJECT MANAGER Bimpal Shah, P.E. (703) 259-2362 (NOVA District)
SURVEYED BY, DATE H&B Surveying and Mapping, LLC (804) 330-3781, 03/09/2021
DESIGN BY Whitman, Requardt, & Associates, LLP (804) 212-8700
SUBSURFACE UTILITY BY, DATE Accumark, Inc. (804) 550-7740, 07/07/2021

CONSTRUCTION ALIGNMENT DATA SHEET

REVISED	STATE	STATE ROUTE	STATE PROJECT	SHEET NO.
	VA.	95	0095-076-299, C-501	IG(5)

COMMONWEALTH OF VIRGINIA
MITCHELL F. JOHNSON
Lic. No. 023838
PROFESSIONAL ENGINEER

Mitchell F Johnson
2022.07.13 19:12:48 -04'00'
Whitman, Requardt & Associates
Richmond, Virginia
ROADWAY ENGINEER

DESIGN FEATURES RELATING TO CONSTRUCTION OR TO REGULATION AND CONTROL OF TRAFFIC MAY BE SUBJECT TO CHANGE AS DEEMED NECESSARY BY THE DEPARTMENT

CURVE I-95 SBL-3
PI = 396+40.15
DELTA = 07°55'19.06" (RT)
D = 00°14'56"
T = 1,594.72'
L = 3,184.36'
R = 23,030.99'
PC = 380+45.43
PT = 412+29.79
V= 70 mph

CURVE I-95 NBL-3
PI = 396+28.86
DELTA = 07°55'18.96" (RT)
D = 00°15'03"
T = 1,582.53'
L = 3,160.01'
R = 22,854.94'
PC = 380+46.33
PT = 412+06.34
V= 70 mph

CURVE 95 XBL-3
PI = 748+39.34
DELTA = 07°24'54.68" (RT)
D = 00°14'49"
T = 1,503.36'
L = 3,002.53'
R = 23,200.00'
PC = 733+35.98
PT = 763+38.51
Ls = 200.00
Θs = 00°14'49"
P = 0.07
K = 100.00
Xs = 200.00
Ys = 0.29
LT = 133.33
ST = 66.67
LC = 200.00
V= 65 MPH

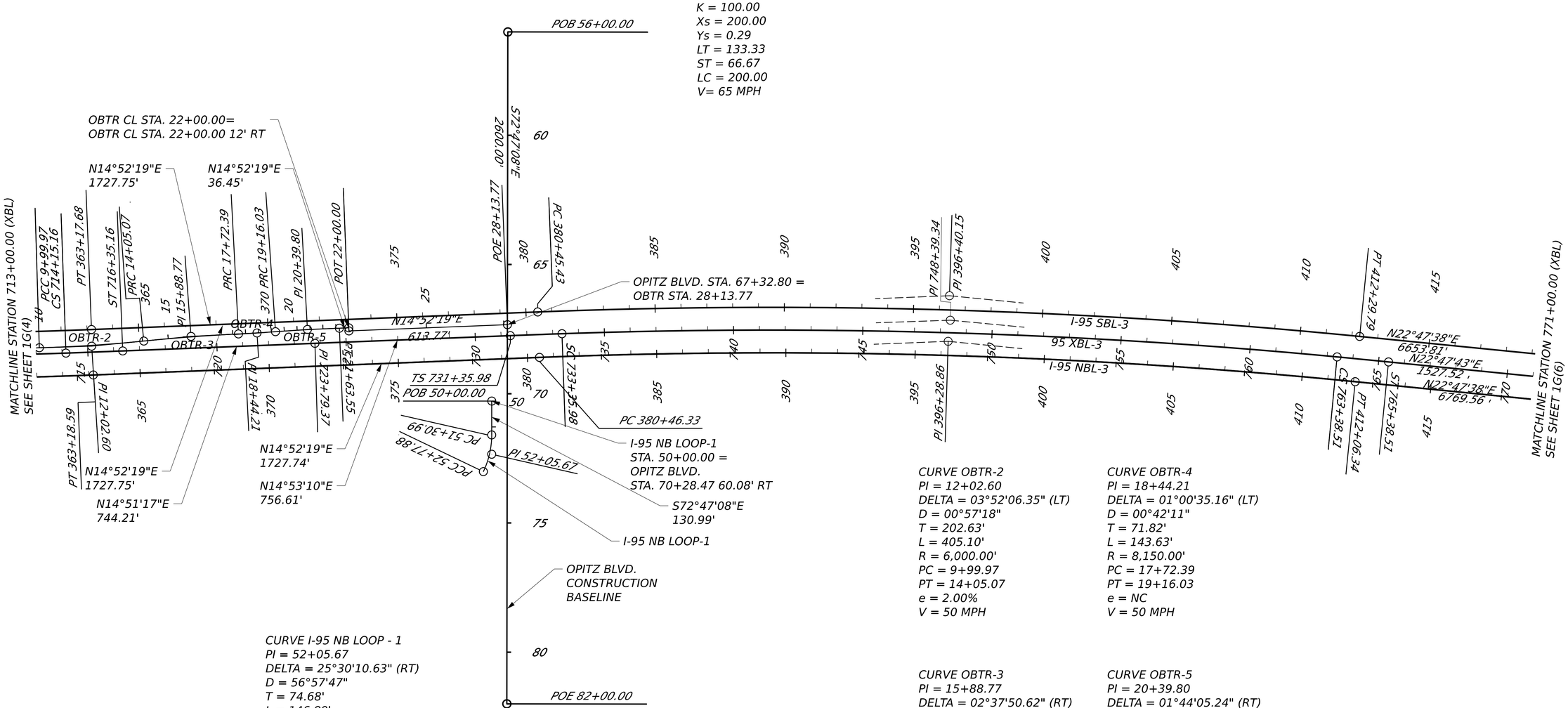

CURVE I-95 NB LOOP - 1
PI = 52+05.67
DELTA = 25°30'10.63" (RT)
D = 56°57'47"
T = 74.68'
L = 146.89'
R = 330.00'
PC = 51+30.99
PT = 52+77.88
e = 4.00%
V = 35 MPH

CURVE OBTR-2
PI = 12+02.60
DELTA = 03°52'06.35" (LT)
D = 00°57'18"
T = 202.63'
L = 405.10'
R = 6,000.00'
PC = 9+99.97
PT = 14+05.07
e = 2.00%
V = 50 MPH

CURVE OBTR-4
PI = 18+44.21
DELTA = 01°00'35.16" (LT)
D = 00°42'11"
T = 71.82'
L = 143.63'
R = 8,150.00'
PC = 17+72.39
PT = 19+16.03
e = NC
V = 50 MPH

CURVE OBTR-3
PI = 15+88.77
DELTA = 02°37'50.62" (RT)
D = 00°42'59"
T = 183.69'
L = 367.32'
R = 8,000.00'
PC = 14+05.07
PT = 17+72.39
e = NC
V = 50 MPH

CURVE OBTR-5
PI = 20+39.80
DELTA = 01°44'05.24" (RT)
D = 00°42'03"
T = 123.77'
L = 247.52'
R = 8,175.00'
PC = 19+16.03
PT = 21+63.55
e = NC
V = 50 MPH

AFC PLANS

SCALE
0 200' 400'

PROJECT	SHEET NO.
0095-076-299	IG(5)

7/11/2022
8:49:40 AM

LIMITED ACCESS HIGHWAY

By Resolution of the Highway Commission dated October 4, 1956.
By Resolution of the Highway Commission dated January 18, 1973
By Resolution of the Commonwealth Transportation Board dated April 19, 2022

PROJECT MANAGER Bimpal Shah, P.E. (703) 259-2362 (NOVA District)
SURVEYED BY, DATE H&B Surveying and Mapping, LLC (804) 330-3781, 03/09/2021
DESIGN BY Whitman, Requardt, & Associates, LLP (804) 272-8700
SUBSURFACE UTILITY BY, DATE Accumark, Inc. (804) 550-7740, 07/07/2021

IG(4)

CONSTRUCTION ALIGNMENT DATA SHEET

COMMONWEALTH OF VIRGINIA
MITCHELL F. JOHNSON
Lic. No. 023838
PROFESSIONAL ENGINEER

Mitchell F Johnson
2022.07.13 19:13:10 -04'00'

Whitman, Requardt & Associates
Richmond, Virginia
ROADWAY ENGINEER

REVISED	STATE	STATE ROUTE	STATE PROJECT	SHEET NO.
	VA.	95	0095-076-299, C-501	IG(6)

DESIGN FEATURES RELATING TO CONSTRUCTION OR TO REGULATION AND CONTROL OF TRAFFIC MAY BE SUBJECT TO CHANGE AS DEEMED NECESSARY BY THE DEPARTMENT

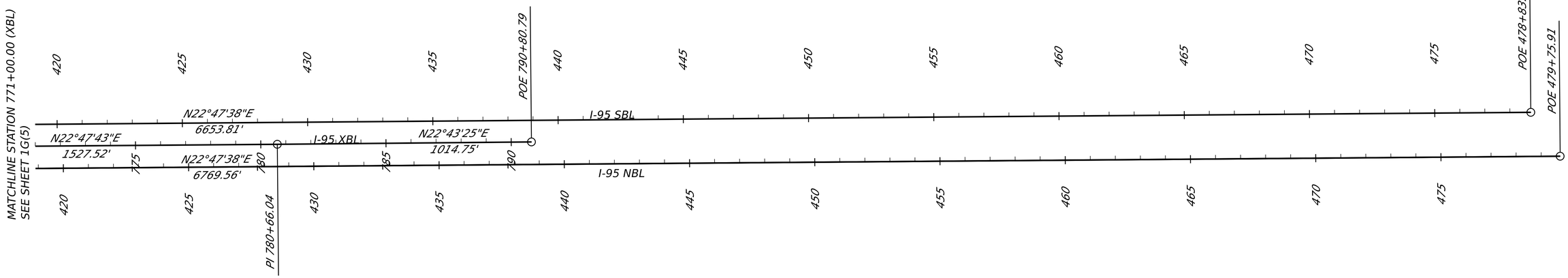

AFC PLANS

SCALE
0 200' 400'

PROJECT	SHEET NO.
0095-076-299	IG(6)

LIMITED ACCESS HIGHWAY

By Resolution of the Highway Commission dated October 4, 1956.
By Resolution of the Highway Commission dated January 18, 1973
By Resolution of the Commonwealth Transportation Board dated April 19, 2022

PROJECT MANAGER Bimpal Shah, P.E. (703) 259-2362 (NOVA District)
SURVEYED BY, DATE H&B Surveying and Mapping, LLC (804) 330-3781, 03/09/2021
DESIGN BY Whitman, Requardt, & Associates, LLP (804) 272-8700
SUBSURFACE UTILITY BY, DATE Accumark, Inc. (804) 550-7740, 07/07/2021

TRANSPORTATION MANAGEMENT PLAN & SEQUENCE OF CONSTRUCTION

COMMONWEALTH OF VIRGINIA
MITCHELL F. JOHNSON
Lic. No. 023838
PROFESSIONAL ENGINEER

Mitchell F Johnson
2022.07.19 10:15:50 -04'00'

Whitman, Requardt & Associates
Richmond, Virginia
ROADWAY ENGINEER

REVISED	STATE	STATE ROUTE	STATE PROJECT	SHEET NO.
	VA.	95	0095-076-299, C-501	IK(1)

DESIGN FEATURES RELATING TO CONSTRUCTION OR TO REGULATION AND CONTROL OF TRAFFIC MAY BE SUBJECT TO CHANGE AS DEEMED NECESSARY BY THE DEPARTMENT

TRANSPORTATION MANAGEMENT PLAN (TMP)

THIS TRANSPORTATION MANAGEMENT PLAN HAS BEEN DEVELOPED IN ACCORDANCE WITH VDOT IIM-LD-241.5 REQUIREMENTS FOR A TYPE C, CATEGORY V PROJECT.

TRANSPORTATION OPERATIONS PLAN

THIS TRANSPORTATION OPERATIONS PLAN CONTAINS PROCEDURES AND PROCESSES TO RESPOND TO INCIDENTS IN THE WORK ZONE, AND TO MODIFY TEMPORARY TRAFFIC CONTROL PLANS TO IMPROVE OPERATIONS IF NECESSARY. PROCESSES FOR PUBLIC OUTREACH, INCLUDING COORDINATION WITH THE VDOT NORTHERN REGION OPERATIONS TRAFFIC OPERATIONS CENTER (NRO TOC) ARE FOUND IN THE PUBLIC COMMUNICATIONS PLAN SECTION.

INCIDENT MANAGEMENT PLAN

1) TIMELY RESPONSE TO AN INCIDENT IS EXTREMELY IMPORTANT TO ACHIEVE SWIFT EMERGENCY RESPONSE AND TO RESTORE TRAFFIC OPERATIONS. IN THE EVENT OF A TRAFFIC CRASH OR OTHER EMERGENCY SITUATION IN THE PROJECT AREA, THE CONTRACTOR SHALL IMMEDIATELY NOTIFY THE EMERGENCY RESPONSE AGENCIES NOTED BELOW. THE CONTRACTOR SHALL ASSIST IN MAKING THE INCIDENT AREA ACCESSIBLE TO EMERGENCY VEHICLES, AND SHALL FOLLOW DIRECTIONS OF THE POLICE IN ORDER TO RESTORE NORMAL OPERATIONS.

2) VDOT HAS THE RIGHT TO DIRECT THE CONTRACTOR TO MODIFY, ADJUST, OR REMOVE LANE CLOSURES AT ANY TIME. THE VDOT CONSTRUCTION MANAGER MAY NOTIFY ADDITIONAL VDOT PERSONNEL AND AGENCIES OF THE INCIDENT AND THE RESULTING TRAFFIC DELAYS AS APPROPRIATE. DURING INCIDENTS THAT CLOSE ONE OR MORE LANES ON INTERSTATE 95, ALL LANE CLOSURES SHALL BE REMOVED AND ALL TRAVEL LANES FULLY OPENED TO TRAFFIC IN THE SAME DIRECTION AS THE INCIDENT ON INTERSTATE 95, 95 EXPRESS LANES, AND THE INTERCHANGE RAMPS. AN INCIDENT SHALL BE DEFINED AS ANY CONDITION (INCLUDING CONTRACTOR WORK OPERATIONS) THAT CAUSE A TRAFFIC QUEUE EXTENDING GREATER THAN FIVE (5) MILES ON INTERSTATE 95 BETWEEN THE HOURS OF 5:00AM TO 9:00PM OR GREATER THAN SIX (6) MILES ON INTERSTATE 95 DURING ALL OTHER HOURS. THE QUEUE LENGTH SHALL BE MEASURED STARTING AT THE ROAD WORK AHEAD SIGNS.

THE CONTACT LIST FOR LOCAL EMERGENCY RESPONSE AGENCIES IS AS FOLLOWS:

A. EMERGENCY - 911
B. NON-EMERGENCY - *77 OR 112
C. VA STATE POLICE - DISPATCH (540) 829-7766
D. VA STATE POLICE - AREA 11 (703) 791-3101
E. PRINCE WILLIAM COUNTY SHERIFF'S OFFICE (703) 792-6070
F. PRINCE WILLIAM COUNTY FIRE AND RESCUE (703) 792-6800
G. NOVA TRAFFIC OPERATIONS CENTER (800) 367-7623
H. NORTHERN VIRGINIA TRAFFIC OPERATIONS CENTER (703) 877-3449
I. TRANSURBAN'S EXPRESS OPERATIONS CENTER (571) 419-6046

WRECKER SERVICE

THE CONTRACTOR SHALL COORDINATE WITH THE STATE POLICE CONCERNING THE DESIGNATED WRECKER SERVICE COMPANY ASSIGNED TO THE WORK AREA. THIS COORDINATION SHALL TAKE PLACE UPON COMMENCEMENT OF THE CONSTRUCTION OPERATIONS, AND AT MINIMUM 3 MONTH INTERVALS, IN ORDER TO ENSURE PROMPT DISABLED VEHICLE REMOVAL SERVICE DURING ACTUAL INCIDENT AND EMERGENCY SITUATIONS.

INCIDENT REVIEW AND TRAFFIC CONTROL PLAN MODIFICATION

APPROPRIATE ACCIDENT REPORTS WILL BE COMPLETED IN ACCORDANCE WITH THE CONTRACTOR'S HEALTH, SAFETY, AND WELFARE PLAN, STATE POLICE PROCEDURES, OR STANDARD VDOT PROCEDURES. THE ACCIDENT REPORT SHALL BE THOROUGHLY REVIEWED BY STAKEHOLDER'S FOR THE PURPOSES OF MODIFYING THE TEMPORARY TRAFFIC CONTROL PLANS TO REDUCE THE FREQUENCY AND SEVERITY OF FUTURE INCIDENTS. RECOMMENDATIONS MADE SHALL BE IMPLEMENTED BY THE CONTRACTOR.

PUBLIC COMMUNICATIONS PLAN

A PROACTIVE COMMUNICATIONS AND OUTREACH PLAN IS IMPERATIVE TO KEEP ALL STAKEHOLDERS AWARE OF CHANGING ROADWAY CONDITIONS AND ROADWAY DISRUPTIONS (SUCH AS LANE CLOSURES OR TEMPORARY STOPPAGES). IN ORDER TO ATTAIN THIS AWARENESS, NOTIFICATION PROCESSES NEED TO BE IMPLEMENTED BETWEEN ALL PARTIES. THESE STAKEHOLDERS INCLUDE TRANSURBAN, THE CONTRACTOR'S WORK ZONE TRAFFIC CONTROL COORDINATOR, VDOT CONSTRUCTION MANAGER, VDOT TRAFFIC OPERATIONS, VDOT PUBLIC AFFAIRS, FHWA, LOCAL GOVERNMENT, COUNTY POLICE, STATE POLICE, FIRE AND RESCUE, SCHOOLS, TRANSIT AGENCIES, LOCAL BUSINESSES, LOCAL RESIDENTS, AND LOCAL AND LONG DISTANCE TRAVELERS.

CONTRACTOR'S NOTIFICATION PROCESS

1. BEFORE IMPLEMENTING COMPLETE ROADWAY CLOSURES, CHANGING TRAFFIC PATTERNS, OR ANY OTHER ACTIVITY ANTICIPATED TO HAVE A SIGNIFICANT IMPACT TO TRAFFIC, THE CONTRACTOR SHALL PLACE PORTABLE CHANGEABLE MESSAGE SIGNS (PCMS) ON AFFECTED ROADWAYS A MINIMUM OF SEVEN (7) DAYS PRIOR TO THE EVENT.

2. TOTAL CLOSURES OF I-95 FOR SUCH WORK AS INSTALLATION AND REMOVAL OF OVERHEAD SIGN PANELS AND STRUCTURES WITH SUBSTANTIATION OF NEED BY THE CONTRACTOR WILL REQUIRE COORDINATION WITH APPROPRIATE STAKEHOLDERS AND PUBLIC NOTICE. THE CONTRACTOR SHALL PROVIDE A MINIMUM OF SIX (6) WEEKS ADVANCE NOTICE TO VDOT. THIS ADVANCE NOTICE WILL ALLOW THE CONTRACTOR AND VDOT TO COORDINATE ON A PUBLIC OUTREACH CAMPAIGN AND/OR ADVERTISING TO REACH AFFECTED MOTORISTS AND TARGET AUDIENCES. ALTERNATE DATES CAN BE ADVERTISED IN THE EVENT OF INCLEMENT WEATHER.

PUBLIC NOTIFICATION PROCESS

THE FOLLOWING PROACTIVE STRATEGIES WILL BE USED IN ORDER TO KEEP THE PUBLIC INFORMED OF LANE CLOSURES AND CHANGING TRAFFIC PATTERNS THROUGHOUT CONSTRUCTION:

1. THE CONTRACTOR WILL COORDINATE WITH VDOT ON THE USE OF THE DEPARTMENTS EXISTING PORTABLE CHANGEABLE MESSAGE SIGNS (PCMS) WITHIN THE PROJECT LIMITS TO COMMUNICATE CONSTRUCTION RELATED INFORMATION TO TRAVELERS AS DESCRIBED IN THE CONTRACTOR'S NOTIFICATION PROCESS. IN THE EVENT THE DEPARTMENTS PCMS ARE NOT AVAILABLE, OR AT THE DIRECTION OF VDOT, THE CONTRACTOR SHALL PROVIDE ADDITIONAL PCMS FOR USE IN PROVIDING CONSTRUCTION RELATED INFORMATION TO TRAVELERS AS DESCRIBED IN THE CONTRACTOR'S NOTIFICATION PROCESS. IT IS ALSO SUGGESTED THAT VDOT TRAFFIC OPERATIONS CENTER USE ITS INTELLIGENT TRANSPORTATION SYSTEM DEVICES TO COMMUNICATE CONSTRUCTION RELATED INFORMATION TO TRAVELERS.

RESTRICTION OF OPERATIONS

EXPRESS LANES

1) FOR WORK WITHIN THE 95 EXPRESS LANES, ACCESS SHALL BE APPROVED BY TRANSURBAN USA OPERATIONS IN ADVANCE IN ACCORDANCE WITH TRANSURBAN'S AUTHORITY TO ACCESS (ATA) CONTRACTOR PROCEDURE - PERMITTED. REQUESTS FOR AN ATA (ALSO REFERRED TO AS A WORK AUTHORITY PERMIT, WAP) SHALL BE SUBMITTED A MINIMUM 10 BUSINESS DAYS IN ADVANCE OF THE INTENDED ACCESS DATE.

HOLIDAY

1) IN ADDITION TO THE SUNDAY OR HOLIDAY WORK LIMITATIONS, MOBILE, SHORT DURATION, SHORT-TERM STATIONARY, OR INTERMEDIATE-TERM STATIONARY TEMPORARY TRAFFIC CONTROL ZONE LANE CLOSURES ON MAINLINE LANES, SHOULDERS, OR RAMPS SHALL NOT BE PERFORMED DURING THE FOLLOWING HOLIDAY TIME PERIODS WITHOUT THE WRITTEN PERMISSION OF THE ENGINEER. ADDITIONALLY, A LONG-TERM STATIONARY TEMPORARY TRAFFIC CONTROL ZONE SHALL NOT BE INITIALLY PUT IN PLACE, ADJUSTED, OR REMOVED DURING THE FOLLOWING HOLIDAY TIME PERIODS WITHOUT THE WRITTEN PERMISSION OF THE ENGINEER (VDOT 2020 ROAD AND BRIDGE SPECIFICATIONS):

   A. JANUARY 1: FROM NOON ON THE PRECEDING DAY UNTIL NOON ON THE FOLLOWING DAY, EXCEPT AS INDICATED BELOW.
   B. INAUGURATION DAY: FROM NOON ON THE PRECEDING DAY UNTIL NOON ON THE FOLLOWING DAY.
   C. MARTIN LUTHER KING, JR. DAY: FROM NOON ON THE PRECEDING FRIDAY TO NOON ON THE FOLLOWING TUESDAY.
   D. PRESIDENTS DAY: FROM NOON ON THE PRECEDING FRIDAY TO NOON ON THE FOLLOWING TUESDAY.
   E. EASTER: FROM NOON ON THE PRECEDING FRIDAY TO NOON ON THE FOLLOWING MONDAY.
   F. MEMORIAL DAY: FROM NOON ON THE PRECEDING FRIDAY TO NOON ON THE FOLLOWING TUESDAY.
   G. JUNETEENTH: FROM NOON ON THE PRECEDING DAY UNTIL NOON ON THE FOLLOWING DAY, EXCEPT AS INDICATED BELOW.
   H. JULY 4: FROM NOON ON THE PRECEDING DAY UNTIL NOON ON THE FOLLOWING DAY, EXCEPT AS INDICATED BELOW.
   I. LABOR DAY: FROM NOON ON THE PRECEDING FRIDAY TO NOON ON THE FOLLOWING TUESDAY
   J. SEPTEMBER 11: NO DAYTIME CLOSURES.
   K. INDIGENOUS PEOPLES' DAY: FROM NOON ON THE PRECEDING FRIDAY TO NOON ON THE FOLLOWING TUESDAY.
   L. ELECTION DAY (THE TUESDAY FOLLOWING THE FIRST MONDAY NOVEMBER): NO DAYTIME CLOSURES.
   M. VETERANS DAY: FROM NOON ON THE PRECEDING DAY UNTIL NOON ON THE FOLLOWING DAY, EXCEPT AS INDICATED BELOW.
   N. THANKSGIVING DAY: FROM NOON ON THE WEDNESDAY PRECEDINGTHANKSGIVING DAY UNTIL NOON ON THE FOLLOWING MONDAY.
   O. CHRISTMAS DAY: FROM NOON ON THE PRECEDING DAY UNTIL NOON ON THE FOLLOWING DAY, EXCEPT AS INDICATED BELOW.

2) IF THE HOLIDAY OCCURS ON A FRIDAY OR SATURDAY: FROM NOON ON THE PRECEDING THURSDAY TO NOON ON THE FOLLOWING MONDAY.

3) IF THE HOLIDAY OCCURS ON A SUNDAY OR MONDAY: FROM NOON ON THE PRECEDING FRIDAY TO NOON ON THE FOLLOWING TUESDAY.

AFC PLANS

PROJECT	SHEET NO.
0095-076-299	IK(1)

7/19/2022
9:22:48 AM

LIMITED ACCESS HIGHWAY

By Resolution of the Highway Commission dated October 4, 1956.
By Resolution of the Highway Commission dated January 18, 1973
By Resolution of the Commonwealth Transportation Board dated April 19, 2022

PROJECT MANAGER Bimpal Shah, P.E. (703) 259-2362 (NOVA District)
SURVEYED BY, DATE H&B Surveying and Mapping, LLC (804) 330-3781, 03/09/2021
DESIGN BY Whitman, Requardt, & Associates, LLP (804) 212-8700
SUBSURFACE UTILITY BY, DATE Accumark, Inc. (804) 550-7740, 07/07/2021

TRANSPORTATION MANAGEMENT PLAN & SEQUENCE OF CONSTRUCTION

COMMONWEALTH OF VIRGINIA
MITCHELL F. JOHNSON
Lic. No. 023838
PROFESSIONAL ENGINEER

Mitchell F Johnson
2022.07.19 10:16:57 -04'00'

Whitman Requardt & Associates
Richmond, Virginia
ROADWAY ENGINEER

REVISED	STATE	STATE ROUTE	STATE PROJECT	SHEET NO.
	VA.	95	0095-076-299, C-501	IK(2)

DESIGN FEATURES RELATING TO CONSTRUCTION OR TO REGULATION AND CONTROL OF TRAFFIC MAY BE SUBJECT TO CHANGE AS DEEMED NECESSARY BY THE DEPARTMENT

ALLOWABLE LANE CLOSURE HOURS

INTERSTATE 95				
WEEKDAY	NORTHBOUND			
	SINGLE-LANE CLOSURES OR SHOULDER••	TWO-LANE CLOSURES	MULTIPLE-LANE CLOSURES	COMPLETE ROAD• CLOSURE
	9:30AM TO 3:30PM 9:00PM TO 5:00AM	10:00PM TO 4:30AM	11:00PM TO 4:00AM	12:00AM TO 4:00AM
WEEKDAY	SOUTHBOUND			
	SINGLE-LANE CLOSURES OR SHOULDER••	TWO-LANE CLOSURES	MULTIPLE-LANE CLOSURES	COMPLETE ROAD• CLOSURE
	9:00AM TO 2:00PM 9:30PM TO 6:00AM	10:00PM TO 5:00AM	11:00PM TO 5:00AM	12:00AM TO 4:00AM
WEEKEND	NORTHBOUND/SOUTHBOUND••••			
	SINGLE-LANE CLOSURES OR SHOULDER••	MULTIPLE-LANE CLOSURES		COMPLETE ROAD• CLOSURE
FRIDAY TO SATURDAY	10:00PM TO 7:00AM	11:00PM TO 6:00AM		12:00AM TO 5:00AM
SATURDAY TO SUNDAY	10:00PM TO 7:00AM	11:00PM TO 6:00AM		12:00AM TO 5:00AM
SUNDAY TO MONDAY	10:00PM TO 5:00AM	11:00PM TO 4:00AM		12:00AM TO 4:00AM
•••• FOR SPECIAL OPERATIONS, DEPENDING ON THE TIME OF YEAR, ADDITIONAL HOURS MAY BE ALLOWED WITH PROPER ADA/ROD APPROVAL.				

SINGLE-LANE CLOSURES OR SHOULDER••					
ARTERIAL	WEEKDAY		WEEKEND		
	MONDAY TO THURSDAY	FRIDAY	FRIDAY TO SATURDAY	SATURDAY TO SUNDAY	SUNDAY TO MONDAY
OPITZ BOULEVARD	9:30AM TO 3:00PM 10:00PM TO 5:00AM	9:30PM TO 2:00AM	10:00PM TO 9:00AM	10:00PM TO 8:00AM	10:00PM TO 5:00AM
ALL OTHER ROADWAYS	9:00AM TO 3:30PM 9:00PM TO 5:00AM	9:00AM TO 2:00PM	10:00PM TO 9:00AM	9:00PM TO 9:00AM	10:00PM TO 5:00AM

MULTIPLE-LANE CLOSURES					
ARTERIAL	WEEKDAY		WEEKEND		
	MONDAY TO THURSDAY	FRIDAY	FRIDAY TO SATURDAY	SATURDAY TO SUNDAY	SUNDAY TO MONDAY
OPITZ BOULEVARD	10:00PM TO 5:00AM	NOT ALLOWED UNTIL 11:00PM	11:00PM TO 5:00AM	11:00PM TO 6:00AM	11:00PM TO 5:00AM
ALL OTHER ROADWAYS	9:00PM TO 5:00AM	NOT ALLOWED UNTIL 10:00PM	10:00PM TO 6:00AM	10:00PM TO 6:00AM	10:00PM TO 5:00AM

•COMPLETE ROAD CLOSURES: 20 MINUTES MAXIMUM OR A TIME FRAME APPROVED BY VDOT TO FACILITATE THE ERECTION OR REMOVAL OF BRIDGE BEAMS AND OVERHEAD SIGN PANELS.
•• SINGLE - LANE CLOSURES ARE ONLY PERMITTED FOR MULTIPLE - LANE ROADWAYS; LONG - TERM CLOSURES OF THE SHOULDERS ADJACENT TO THE GP LANES ARE ALLOWABLE PURSUANT TO VDOT APPROVAL.
•••OTHER ROADWAY CLOSURES WILL REQUIRE COORDINATION AND POSSIBLY PERMITTING WITH THE AGENCY HAVING JURISDICTION OVER THE ROADWAY. MAJOR ARTERIALS ARE DEFINED AS PRIMARY ROUTES AND ALL OTHER ROUTES THAT CONNECT DIRECTLY TO INTERSTATE I-95.

95 EXPRESS LANES - ALLOWABLE LANE CLOSURE TIMES•		
REVERSIBLE LANES (95 EXPRESS LANES)		
DAY	SINGLE-LANE CLOSURES OR SHOULDER	COMPLETE ROAD CLOSURE••
WEEKDAY	9:30PM (SUNDAY TO THURSDAY) to 4:00AM (MONDAY TO FRIDAY)	11:00PM to 4:00AM
WEEKEND	11:00PM (FRIDAY TO SATURDAY) to 9:00AM (SATURDAY TO SUNDAY)	11:00PM to 4:00AM

• DIRECTION OF TRAFFIC CONTROL FOR ALL LANE CLOSURES IN REVERSIBLE LANES WILL NEED TO BE ADJUSTED AS NECESSARY TO FACE DIRECTION OF TRAFFIC.
•• COMPLETE ROAD CLOSURE ON EXPRESS LANES LIMITED TO 30 MINUTES OR LESS.

1) THESE ALLOWABLE HOURS SHALL BE APPLICABLE TO BOTH STATIONARY AND MOBILE LANE CLOSURES, AS WELL AS SHOULDER CLOSURES. VDOT WILL CONSIDER CHANGES TO THE ALLOWABLE LANE CLOSURE HOURS ONLY IF THE CONTRACTOR CAN DEMONSTRATE WHY THE PROPOSED WORK CANNOT BE COMPLETED WITHIN THE CONTRACT ALLOWABLE LANE CLOSURE HOURS. ALL REQUESTS SHALL INCLUDE AN ASSESSMENT OF THE WORK ZONE TRAFFIC IMPACTS USING A SKETCH PLANNING TRAFFIC ANALYSIS TOOL AND/OR AN OPERATIONAL LEVEL TRAFFIC ANALYSIS SOFTWARE PROGRAM AS APPROPRIATE FOR APPROVAL BY VDOT AT LEAST 30 DAYS PRIOR TO THE OPERATION IMPACTING THE LANES.

2) TOTAL CLOSURES OF I-95 FOR SUCH WORK AS INSTALLATION AND REMOVAL OF OVERHEAD SIGN PANELS AND STRUCTURES WITH SUBSTANTIATION OF NEED BY THE CONTRACTOR WILL REQUIRE COORDINATION WITH APPROPRIATE STAKEHOLDERS AND PUBLIC NOTICE. THE CONTRACTOR SHALL PROVIDE A MINIMUM OF SIX (6) WEEKS ADVANCE NOTICE TO VDOT. THIS ADVANCE NOTICE WILL ALLOW THE CONTRACTOR AND VDOT TO COORDINATE ON A PUBLIC OUTREACH CAMPAIGN AND/OR ADVERTISING TO REACH AFFECTED MOTORISTS AND TARGET AUDIENCES. ALTERNATE DATES CAN BE ADVERTISED IN THE EVENT OF INCLEMENT WEATHER.

3) THE CONTRACTOR SHALL BE RESPONSIBLE FOR SUBMITTING ALL LANE AND/OR SHOULDER CLOSURES INTO LCAMS AT LEAST TEN (10) DAYS IN ADVANCE OF THE PROPOSED LANE AND/OR SHOULDER CLOSURE(S) AND NO LATER THAN CLOSE OF BUSINESS WEDNESDAY THE WEEK PRIOR TO THE CLOSURE STATING THE LOCATION, PURPOSE, SPECIFIC LANE(S) TO BE CLOSED, TIME AND DURATION OF CLOSURE. ANY CONFLICTS GENERATED FROM LCAMS SHALL BE RESOLVED NO LATER THAN CLOSE OF BUSINESS THURSDAY THE WEEK PRIOR TO THE CLOSURE TO AVOID CANCELLATION OF THE LANE CLOSURE REQUEST. THE CONTRACTOR SHALL ALSO BE RESPONSIBLE FOR ENTERING LANE CLOSURE REQUESTS IN VDOT SYSTEMS SUCH AS VATRAFFIC, LCAMS, AND VA511.

4) THE CONTRACTOR IS RESPONSIBLE FOR PROVIDING ADVANCE NOTIFICATION VIA VARIABLE MESSAGE AND REQUIRED STATIC SIGNING FOR LANE AND/OR SHOULDER AND COMPLETE ROAD CLOSURES IN ACCORDANCE WITH THE 2011 (REVISION 2.1, NOVEMBER 1, 2020) VIRGINIA WORK AREA PROTECTION MANUAL AND THE MANUAL ON UNIFORM TRAFFIC CONTROL DEVICES (MUTCD). ONCE A CLOSING IS IN PLACE, WORK SHALL COMMENCE IMMEDIATELY AND SHALL PROGRESS ON A CONTINUOUS BASIS TO COMPLETION OR TO A DESIGNATED TIME.

5) VDOT RESERVES THE RIGHT TO MONITOR TRAFFIC CONDITIONS IMPACTED BY THE WORK AND TO MAKE RESTRICTIONS FOR OTHER HOLIDAYS OR SPECIAL LOCAL EVENTS MAY BE NECESSARY, HOWEVER, IN THESE SITUATIONS VDOT WILL ENDEAVOR TO INFORM THE CONTRACTOR AT THE EARLIEST AND IN NO CASE LESS THAN FORTY-EIGHT (48) HOURS PRIOR TO THE EVENT.

6) PROJECT PERSONNEL MUST HAVE SUFFICIENT MANPOWER AND RESOURCES AVAILABLE TO RESPOND TO ANY ONSITE EMERGENCY, INCLUDING ANY WORK ZONE INCIDENTS.

AFC PLANS

PROJECT	SHEET NO.
0095-076-299	IK(2)

7/11/2022
8:50:16 AM

LIMITED ACCESS HIGHWAY

By Resolution of the Highway Commission dated October 4, 1956.
By Resolution of the Highway Commission dated January 18, 1973
By Resolution of the Commonwealth Transportation Board dated April 19, 2022

PROJECT MANAGER Bimpal Shah, P.E. (703) 259-2362 (NOVA District)
SURVEYED BY, DATE H&B Surveying and Mapping, LLC (804) 330-3781, 03/09/2021
DESIGN BY Whitman, Requardt, & Associates, LLP (804) 272-8700
SUBSURFACE UTILITY BY, DATE Accumark, Inc. (804) 550-7740, 07/07/2021

TRANSPORTATION MANAGEMENT PLAN & SEQUENCE OF CONSTRUCTION

COMMONWEALTH OF VIRGINIA
MITCHELL F. JOHNSON
Lic. No. 023838
PROFESSIONAL ENGINEER

Mitchell F Johnson
2022.07.13 19:14:28 -04'00'

Whitman Requardt & Associates
Richmond, Virginia
ROADWAY ENGINEER

REVISED	STATE	STATE ROUTE	STATE PROJECT	SHEET NO.
	VA.	95	0095-076-299, C-501	IK(3)

DESIGN FEATURES RELATING TO CONSTRUCTION OR TO REGULATION AND CONTROL OF TRAFFIC MAY BE SUBJECT TO CHANGE AS DEEMED NECESSARY BY THE DEPARTMENT

GENERAL NOTES

1) UNLESS OTHERWISE APPROVED OR DIRECTED BY THE ENGINEER, THE CONTRACTOR SHALL PLAN AND PROSECUTE THE WORK IN ACCORDANCE WITH THIS TRANSPORTATION MANAGEMENT PLAN.

2) ALL TRAFFIC MAINTENANCE SHALL CONFORM WITH THE FOLLOWING AND THE LATEST REVISIONS THERETO:
   A. MANUAL ON UNIFORM TRAFFIC CONTROL DEVICES
   B. 2011 VIRGINIA SUPPLEMENT TO THE 2009 MUTCD (REV. 1)
   C. 2011 VIRGINIA WORK AREA PROTECTION MANUAL (REV. 2.1: NOVEMBER 1, 2020)
   D. 2016 VDOT ROAD AND BRIDGE STANDARDS (LATEST REVISION)
   E. 2020 VDOT ROAD AND BRIDGE SPECIFICATIONS (LATEST REVISION)

3) IT IS NOT THE INTENT OF THE MAINTENANCE OF TRAFFIC PLAN TO ENUMERATE EVERY DETAIL WHICH MUST BE CONSIDERED IN CONSTRUCTION, BUT ONLY TO SHOW THE GENERAL HANDLING OF TRAFFIC UNLESS OTHERWISE APPROVED OR DIRECTED BY THE VDOT ENGINEER.

4) THE CONTRACTOR SHALL SUBMIT TRAFFIC CONTROL PLANS TO VDOT FOR APPROVAL. THE CONTRACTOR SHOULD REFER TO THE VIRGINIA WORK AREA PROTECTION MANUAL, SPECIFICALLY THE FOLLOWING STANDARDS:

   TTC-1.1 - WORK BEYOND THE SHOULDER OPERATION
   TTC-4.2 - STATIONARY OPERATION ON A SHOULDER
   TTC-6.2 - SHOULDER CLOSURE WITH BARRIER OPERATION
   TTC-7.1 - SHOULDER CLOSURE WITH BARRIER AND LANE SHIFT OPERATION
   TTC-13.2 - MOVING/MOBILE OPERATIONS ON A MULTI-LANE ROADWAY
   TTC-16.2 - OUTSIDE LANE CLOSURE OPERATION ON A FOUR-LANE ROADWAY
   TTC-17.2 - INSIDE LANE CLOSURE OPERATION ON A FOUR-LANE ROADWAY
   TTC-18.2 - MULTI-LANE CLOSURE OPERATION
   TTC-26.2 - LANE CLOSURE OPERATION - NEAR SIDE OF AN INTERSECTION
   TTC-27.2 - LANE CLOSURE OPERATION - FAR SIDE OF AN INTERSECTION
   TTC-29.2 - TURN LANE CLOSURE OPERATION
   TTC-30.2 - FLAGGING OPERATION AT A SIGNALIZED INTERSECTION
   TTC-38.1 - PARTIAL EXIT RAMP CLOSURE OPERATION
   TTC-39.1 - WORK OPERATION IN THE VICINITY OF AN ENTRANCE RAMP
   TTC-40.2 - MULTI-LANE SHIFT OPERATION
   TTC-50.2 - DISRUPTION OPERATION ON A MULTI-LANE ROADWAY
   TTC-53.0 - SIGNING FOR PROJECT LIMITS
   TTC-55.1 - ERADICATION OF PAVEMENT MARKINGS IN A WORK ZONE
   TTC-57.2 - END OF DAY SIGNING FOR PARTIAL PAVING OPERATIONS ON A MULTI-LANE ROADWAY
   TTC-58.1 - END OF DAY SIGNING FOR FULL PAVING OPERATIONS ON A MULTI-LANE ROADWAY
   TTC-59.1 - END OF DAY SIGNING FOR PAVING OPERATIONS ON A TWO-LANE ROADWAY
   TTC-60.0 - TEMPORARY PAVEMENT MARKING AND MARKER GUIDELINES
   TTC-66.1 - SLOW ROLL OPERATION ON A MULTI-LANE ROADWAY

5) AT THE CONCLUSION OF EACH WORKDAY, EQUIPMENT AND MATERIALS SHALL NOT BE STORED WITHIN THE ESTABLISHED PROJECT CLEAR ZONES (32' FOR I-95 EXPRESS LANES, 37' FOR I-95 GP LANES, AND 15' FOR OPITZ BOULEVARD) AND/OR DEFLECTION ZONE OF PHYSICAL BARRIERS IN ACCORDANCE WITH THE CONTRACT DOCUMENTS. ANY AREAS EXCAVATED BELOW THE EXISTING PAVEMENT SURFACE AND WITHIN THE CLEAR ZONE, SHALL BE BACKFILLED WITH APPROVED MATERIAL TO FORM AN APPROXIMATE 6:1 WEDGE AGAINST THE EXISTING PAVEMENT SURFACE FOR THE SAFETY AND PROTECTION OF VEHICULAR TRAFFIC.

6) ALL SIGNS, GROUP 2 CHANNELIZING DEVICES, AND ANY OTHER DEVICES USED IN THE CONSTRUCTION ZONE SHALL BE FURNISHED BY THE CONTRACTOR AND SHALL BE KEPT CLEAN AND PROPERLY ALIGNED AT ALL TIMES.

7) WHEN UTILIZED, TRAFFIC BARRIER SERVICE SHALL BE INSTALLED AND REMOVED SO AS NOT TO PRESENT ANY BLUNT END OR HAZARD TO THE MOTORING PUBLIC. THE PLACEMENT AND REMOVAL OF THE TRAFFIC BARRIER SERVICE AND BARRICADES ARE TO BE COORDINATED BY THE PROJECT SAFETY OFFICER.

8) THE EXISTING POSTED SPEED LIMITS SHALL BE MAINTAINED DURING CONSTRUCTION UNLESS OTHERWISE APPROVED BY THE ENGINEER.

9) THE CONTRACTOR SHALL MAINTAIN ALL SIGNAGE WITHIN THE LIMITS OF CONSTRUCTION, SHOWN OR OTHERWISE, UNLESS DIRECTED BY THE ENGINEER. IF REMOVAL IS ALLOWED, CONTRACTOR SHALL STORE THE SIGNS PER VDOT STANDARDS, AND IF DIRECTED, REPLACE THEM AT THE COMPLETION OF THE PROJECT.

10) THE CONTRACTOR SHALL ENSURE POSITIVE DRAINAGE FOR THE DURATION OF THE PROJECT. ADDITIONAL TEMPORARY MEASURES MAY BE NEEDED TO FACILITATE PROPER POSITIVE DRAINAGE.

11) THE CONTRACTOR SHALL SCHEDULE ALL PHASES OF CONSTRUCTION IN SUCH A MANNER THAT WATER, SEWER, CABLE, POWER, AND ANY OVERHANGING OR UNDERGROUND UTILITY SERVICES WILL NOT BE INTERRUPTED. THE COST OF ANY TEMPORARY CONNECTION, IN PART OR WHOLE, SHALL BE INCIDENTAL TO THE UTILITY RELOCATION/CONSTRUCTION. THE CONTRACTOR SHALL COORDINATE THEIR UTILITY ADJUSTMENTS/RELOCATION ACTIVITIES WITH THE OWNER OF THE UTILITY.

GENERAL NOTES (CONT'D)

12) IF REQUIRED, ALL EROSION AND SEDIMENT CONTROL MEASURES AND TEMPORARY DRAINAGE SHALL BE IN PLACE PRIOR TO THE BEGINNING OF CONSTRUCTION.

13) ALL PAVEMENT MARKINGS AND TRAFFIC FLOW ARROWS ARE SCHEMATIC ONLY. THE ACTUAL LOCATION AND APPLICATION OF PAVEMENT MARKINGS SHALL BE INSTALLED PER THE SIGNING AND PAVEMENT MARKINGS PLANS & IN ACCORDANCE WITH SECTION 704 OF THE VDOT ROAD AND BRIDGE SPECIFICATIONS; THE MUTCD 2009 EDITION; THE 2016 ROAD AND BRIDGE STANDARDS; OR AS DIRECTED BY THE ENGINEER.

14) THE CONTRACTOR IS RESPONSIBLE FOR COORDINATING THE CONSTRUCTION, SIGNING, AND TRAFFIC MANAGEMENT PLAN WITH OTHER ADJACENT PROJECTS UNDER CONSTRUCTION.

15) THE ENGINEER SHALL BE NOTIFIED IN WRITING A MINIMUM OF SEVEN WORKING DAYS PRIOR TO IMPLEMENTATION OF ANY WORK REQUIRING SHOULDER CLOSURES AND/OR PHASE CHANGES.

16) THE CONTRACTOR SHALL MAINTAIN ACCESS TO ALL BUSINESSES, RESIDENTIAL COMMUNITIES, AND PRIVATE ENTRANCES AT ALL TIMES.

17) TRAFFIC SHALL BE MAINTAINED ALONG I-95 NORTHBOUND AND SOUTHBOUND IN THE EXISTING LANE CONFIGURATION AT ALL TIMES UNLESS OTHERWISE APPROVED BY THE ENGINEER. CONCRETE BARRIER PLACED ALONG THE SHOULDER OF I-95 SHALL BE SET A MINIMUM 1' BETWEEN THE FACE OF THE CONCRETE BARRIER AND THE EDGE OF THE ADJACENT TRAVEL LANE.

18) ACCESS TO THE WORK ZONE SHALL BE ALLOWED ONLY FROM DESIGNATED ACCESS POINTS AS DETAILED ON THE MAINTENANCE OF TRAFFIC PLANS. ADDITIONAL ACCESS POINTS NOT SHOWN ON THE PLANS, OR RELOCATION OF ACCESS POINTS SHOWN HEREIN, SHALL BE APPROVED BY THE ENGINEER PRIOR TO INSTALLATION.

19) ALL CONSTRUCTION GUIDE SIGNS, WARNING SIGNS, AND REGULATORY SIGNS SHALL BE SIZED TO CONFORM TO THE DESIGN SPEED OF THE ROADWAY.

20) CONTRACTOR SHALL ERADICATE EXISTING AND/OR TEMPORARY LANE MARKINGS BETWEEN CONSTRUCTION STAGES TO THE MINIMUM REQUIRED TO RESTORE ORIGINAL LANE MARKINGS OR TO REVISE TEMPORARY LANE MARKINGS TO NEXT CONSTRUCTION STAGE. FOR FINAL PAVEMENT MARKINGS SHOWN IN SIGNING AND PAVEMENT MARKING PLANS, CONTRACTOR SHALL MILL ENTIRE PAVEMENT SURFACE TO LIMITS INDICATED IN THE PLANS AND TYPICAL SECTIONS PRIOR TO PLACEMENT OF FINAL PAVEMENT MARKINGS.

21) THIS TRAFFIC MANAGEMENT PLAN WAS PREPARED BY MITCHELL F. JOHNSON, P.E. WHO SUCCESSFULLY COMPLETED THE ADVANCED WZTC ON 06/18/2021.

DETAIL 1 (NTS)
Typical Barrier Terminal Offset

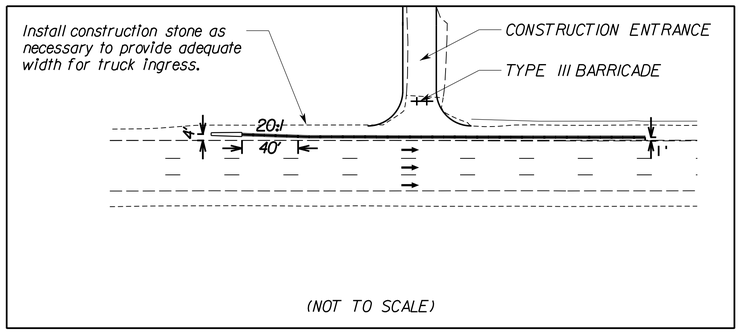

(NOT TO SCALE)

ADVANCED WORK ZONE TRAFFIC CONTROL TRAINING CERTIFICATION

MITCHELL F. JOHNSON

06182190
VERIFICATION NUMBER

06/30/2025
EXPIRATION DATE

AFC PLANS

PROJECT	SHEET NO.
0095-076-299	IK(3)

LIMITED ACCESS HIGHWAY By Resolution of the Highway Commission dated October 4, 1956.
By Resolution of the Highway Commission dated January 18, 1973
By Resolution of the Commonwealth Transportation Board dated April 19, 2022

PROJECT MANAGER Bimpal Shah, P.E. (703) 259-2362 (NOVA District)
SURVEYED BY, DATE H&B Surveying and Mapping, LLC (804) 330-3781, 03/09/2021
DESIGN BY Whitman, Requardt, & Associates, LLP (804) 212-8700
SUBSURFACE UTILITY BY, DATE Accumark, Inc. (804) 550-7740, 07/07/2021

TRANSPORTATION MANAGEMENT PLAN & SEQUENCE OF CONSTRUCTION

REVISED	STATE	STATE ROUTE	STATE PROJECT	SHEET NO.
	VA.	95	0095-076-299, C-501	IK(4)

COMMONWEALTH OF VIRGINIA
MITCHELL F. JOHNSON
Lic. No. 023838
PROFESSIONAL ENGINEER

Mitchell F Johnson
2022.07.14 08:17:22 -04'00'

Whitman, Requardt & Associates
Richmond, Virginia
ROADWAY ENGINEER

DESIGN FEATURES RELATING TO CONSTRUCTION OR TO REGULATION AND CONTROL OF TRAFFIC MAY BE SUBJECT TO CHANGE AS DEEMED NECESSARY BY THE DEPARTMENT

SEQUENCE OF CONSTRUCTION

STAGE 1A: SHEETS IL(1) - IL(9)

RAMP DBSR

1. PRIOR TO STAGE 1A CONSTRUCTION, MILL AND OVERLAY SBL OUTSIDE SHOULDER RUMBLE STRIP FOR THE ENTIRE LENGTH OF BARRIER AND LANE TAPER IN THIS STAGE (WITH TTC-16.2) AND SHOULDER STRENGTHEN SBL INSIDE SHOULDER (WITH TTCP-17.2).
2. SHIFT VEHICULAR TRAFFIC ONTO THE OUTSIDE SHOULDER OF I-95 SB GP LANES AND WESTERN SHOULDER OF I-95 EXPRESS LANES (WITH TTC-7.1 (SHOULDER CLOSURE WITH BARRIER AND LANE SHIFT OPERATION).
3. CONSTRUCT MEDIAN DRAINAGE.
4. CONSTRUCT RAMP DBSR. CONSTRUCT SIGNING, LIGHTING, AND ITS ITEMS.

OPITZ BOULEVARD

1. STRENGTHEN OPITZ BOULEVARD WB SHOULDER TO A MINIMUM OF 6" ASPHALT SECTION. CONTRACTOR SHALL CUT BACK AND REMOVE EXISTING SHOULDER UNTIL A MINIMUM OF 6" ASPHALT DEPTH IS REACHED. THIS WORK SHALL BE COMPLETED USING A SINGLE OUTSIDE LANE CLOSURE ON OPITZ BLVD WB.
2. SHIFT OPITZ BOULEVARD WB LANES ONTO EXISTING SHOULDER. REDUCE WB LANES FROM THREE TO TWO LANES. HOLD EXISTING OUTSIDE EDGE OF TRAVELED WAY.
3. DEMOLISH EXISTING RAISED MEDIAN. CONSTRUCT NEW MEDIAN BARRIER WITH ITS GATES ON EAST SIDE OF OPITZ BRIDGE AND BOULEVARD (SEE ROADWAY, BRIDGE, AND ITS PLANS FOR LOCATIONS). INSTALL IMPACT ATTENUATOR ON EAST END. REMAINING RAISED MEDIAN SHALL BE CONSTRUCTED IN STAGE 4 (CANNOT BE INSTALLED IN STAGE 1A DUE TO TEMPORARY LANE WIDTH REQUIREMENTS OF STAGE 2).
4. CONSTRUCT ROADWAY MEDIAN PAVEMENT AND MEDIAN APPROACH SLABS FOR OPITZ BRIDGE.
5. DEMOLISH AND RECONSTRUCT MEDIAN NOSE NEAR STATION 60+50 IN PREPARATION FOR PEDESTRIAN CROSSING IN STAGE 2.

(NOTE: TURN LANE TO RAMP OBTR MUST REMAIN CLOSED UNTIL EB OPITZ BOULEVARD AND RAMP OBTR IS COMPLETED AND READY FOR OPERATION AS DETERMINED BY THE ENGINEER. USE GROUP 2 DEVICES FOR CLOSURE.)

STAGE 1B:

RAMP DBSR (NOT OPERATIONAL THIS STAGE)

1. RESTORE ORIGINAL LANE MARKINGS ON I-95 GP AND EXPRESS LANES (USING TTC-16.2, TTC-17.2, OR TTC 18.2) AND RESUME NORMAL OPERATION OF TRAVELED WAY. MOVE TEMPORARY TRAFFIC CONTROL BARRIER TO SHOULDER TO BLOCK TRAFFIC FROM ENTERING RAMP DBSR UNTIL ALL SIGNAGE, LIGHTING, AND ITS DEVICES REQUIRED FOR RAMP DBSR OPERATION HAVE BEEN CONSTRUCTED. ANY BARRIER TERMINATED WITHIN CLEAR ZONE SHALL HAVE IMPACT ATTENUATOR MOUNTED TO ITS END.
2. CONSTRUCT OVERHEAD SIGN LOCATIONS 2, 4, 6, 7, 9, AND 12 USING VARIOUS CLOSURES DESCRIBED ON THIS PAGE.
3. CLOSE I-95 SB CD LANE OUTSIDE SHOULDER (WITH TTC-6.2 [SHOULDER CLOSURE WITH BARRIER OPERATION]) TO INSTALL GENERATOR SITE H118A. SEE ITS PLANS FOR DETAILS.

STAGE 2A: SHEETS IN(1) - IN(8)

RAMP DBSR

1. OPEN RAMP DBSR TO TRAFFIC. CLOSE EXISTING I-95 SB OPITZ BOULEVARD SLIP RAMP TO EXPRESS LANES.

   (NOTE: ALL SIGNING, LIGHTING, AND ITS FOR RAMP DBSR SHALL BE INSTALLED AND IN PLACE PRIOR TO OPENING THE NEW RAMP. THE EXISTING I-95 SB SLIP RAMP AT OPITZ BLVD. MAY NOT BE CLOSED UNTIL RAMP DBSR IS FULLY OPERATIONAL).

RAMP OBTR

1. PRIOR TO STAGE 2A CONSTRUCTION, MILL AND OVERLAY SBL OUTSIDE SHOULDER RUMBLE STRIP FOR THE ENTIRE LENGTH OF BARRIER AND LANE TAPER IN THIS STAGE (WITH TTCP-16.2).
2. SHIFT VEHICULAR TRAFFIC ONTO THE OUTSIDE SHOULDER OF I-95 SB GP LANES AND EASTERN SHOULDER OF I-95 EXPRESS LANES.
3. CONSTRUCT MEDIAN DRAINAGE, MSE WALL, AND RAMP OBTR BRIDGE ABUTMENT.
4. CONSTRUCT REMAINING PAVEMENT FOR RAMP OBTR, AND ALL SIGNING, LIGHTING, AND ITS ITEMS REQUIRED ALONG I-95 EXPRESS LANES FOR THE OPERATION OF RAMP OBTR AND OPITZ BOULEVARD. SIGNING, LIGHTING, AND ITS ITEMS MAY USE VARIOUS TTC'S DESCRIBED ON THIS PAGE.
5. CONSTRUCT MEDIAN GUARDRAIL, AND BARRIER REQUIRED ALONG I-95.
6. CONSTRUCT GENERATOR SITE H117A (SEE ITS PLANS FOR LOCATION).

OPITZ BOULEVARD

1. SHIFT OPITZ BOULEVARD WB LANES TOWARD INSIDE OF ROADWAY.
2. DEMOLISH EXISTING BRIDGE AS INDICATED IN BRIDGE PLANS. RECONSTRUCT EXISTING DECK AND APPROACH SLABS.

STAGE 2A: SHEETS IN(1) - IN(8) (CONT'D)

3. CLOSE EXISTING SIDEWALK TO PEDESTRIAN TRAFFIC EAST OF RIGHT TURN LANE FROM OPITZ BLVD TO TELEGRAPH ROAD (RIGHT TURN LANE) UP TO I-95 NB GP ENTRANCE RAMP FROM OPITZ WB. USE OVERNIGHT CLOSURES OF RIGHT TURN LANE/SLIP RAMP TO DEMOLISH AND RECONSTRUCT ADA RAMPS ON NORTHWEST QUADRANT OF TELEGRAPH ROAD INTERSECTION, TO INSTALL PEDESTRIAN PUSH BUTTONS AND SIGNAL, AND TO DEMOLISH AND RECONSTRUCT CURB LINE PER PLANS. RIGHT TURNING TRAFFIC WILL BE SHIFTED TO OUTER THROUGH LANE OF OPITZ BLVD TEMPORARILY DURING OVERNIGHT CLOSURE CONSTRUCTION PERIODS.

   DEMOLISH AND RECONSTRUCT REMAINING EXISTING SIDEWALK ON EACH SIDE OF BRIDGE APPROACH, CONSTRUCT CURB LINE AND RAMP ON EAST SIDE OF BRIDGE, AND INSTALL GUARDRAIL AND REMAINING PEDESTRIAN PUSH BUTTONS/SIGNALS AS SHOWN ON PLANS. DURING RIGHT TURN LANE CLOSURE, A PCMS MAY BE USED TO GUIDE TRAFFIC TO SIGNAL FOR RIGHT TURN TO TELEGRAPH ROAD NORTH.

   (NOTE: SIDEWALK EAST OF TELEGRAPH ROAD TURN LANE NORTHERN RAMP UP TO I-95 NB GP ENTRANCE RAMP FROM OPITZ WB SHALL NOT BE OPENED TO PEDESTRIAN TRAFFIC UNTIL ALL ASPECTS OF SIDEWALK ARE FULLY CONSTRUCTED AND ACCEPTED BY THE ENGINEER. SIDEWALK NORTH AND WEST OF TELEGRAPH ROAD SLIP RAMP SHALL OPEN UPON COMPLETION AND ACCEPTANCE BY THE ENGINEER TO REESTABLISH EXISTING PEDESTRIAN ACCESS ROUTE.)

STAGE 2B:

I-95 NB CD ROAD

1. CLOSE I-95 NB GP OUTSIDE SHOULDER AND I-95 NB CD LANE INSIDE SHOULDER USING VARIOUS TTC'S DESCRIBED ON THIS PAGE FOR SIGNING INSTALLATIONS. CONSTRUCT NEW SIGN BLISTER IN BARRIER AND RELOCATE OVERHEAD SIGN AT LOCATION 8.

STAGE 3: SHEETS IP(1) - IP(5)

OPITZ BOULEVARD

1. OPITZ BOULEVARD WB LANES RESUME NORMAL OPERATIONS. ENTRANCE TO RAMP OBTR WILL BE CLOSED UNTIL COMPLETION OF CONSTRUCTION. RAMP OBTR WILL REMAIN BEHIND BARRIER UNTIL CONCLUSION OF STAGE 4.
2. CONSTRUCT OPITZ BOULEVARD EB BRIDGE WIDENING INCLUDING ITS COMPONENTS, RAMP OBTR BRIDGE CONNECTION, EB LANE DRAINAGE AND ROADWAY WIDENING, I-95 NB ENTRANCE RAMP REALIGNMENT, AND RETAINING WALLS ON THE SE AND SW QUADRANTS OF THE INTERCHANGE. CONTRACTOR MAY USE OVERNIGHT OUTSIDE LANE CLOSURES FOR DRAINAGE STRUCTURE INSTALLATION PRIOR TO INSTALLATION OF BARRIER SERVICE.

   (NOTE: TURN LANE TO RAMP OBTR MUST REMAIN CLOSED UNTIL RAMP OBTR IS COMPLETED AND READY FOR OPERATION AS DETERMINED BY THE ENGINEER.)

OPITZ BRIDGE

1. USING SHOULDER CLOSURE ON I-95 SB CD LANE INSIDE SHOULDER AND I-95 SB GP OUTSIDE SHOULDER CLOSURE, CONSTRUCT PIER 1, BRIDGE PIER PROTECTION SYSTEM, AND NEW GUARDRAIL APPROACH.
2. USING SHOULDER CLOSURE ON I-95 EXPRESS LANES EASTERN SHOULDER AND I-95 NB GP LANES INSIDE SHOULDER, CONSTRUCT PIER 2 AND BRIDGE PIER PROTECTION SYSTEM.

OVERHEAD SIGN LOCATIONS 1, 3, AND 5

1. INSTALL SIGN LOCATIONS 1, 3, AND 5 USING VARIOUS TTC'S SHOWN ON THIS PAGE.

STAGE 4: SHEETS IQ(1) - IQ(3)

OPITZ BOULEVARD

1. USING OVERNIGHT SINGLE LANE CLOSURES ON OPITZ BOULEVARD EB AND WB, PERFORM FINAL CONSTRUCTION OPERATIONS INCLUDING MILL AND OVERLAY OF BRIDGE DECK, CONSTRUCT REMAINING MEDIAN CURB ON BRIDGE NOT CONSTRUCTED IN STAGE 1, RECONSTRUCT BRIDGE JOINTS, REMOVE PIER 3 JOINT, AND CONSTRUCT ABUTMENT MODIFICATIONS (SEE BRIDGE PLANS FOR ALL DETAILS OF BRIDGE CONSTRUCTION).
2. MILL AND OVERLAY FINAL PAVING ON OPITZ BOULEVARD. PROVIDE FINAL PROJECT PAVEMENT MARKINGS.
3. OPEN RAMP OBTR.

INSTALLATION & REMOVAL OF SIGNING, LIGHTING, AND ITS ITEMS

1) ALL PROPOSED SIGNING, LIGHTING, AND ITS EQUIPMENT WITHIN THE CLEAR ZONE AND NOT LOCATED BEHIND TEMPORARY BARRIER OR GUARDRAIL SHALL BE INSTALLED PER TTC 4.2 (STATIONARY OPERATION ON A SHOULDER). IF PROPOSED GUARDRAIL OR BARRIER IS SHOWN, THEN IT SHALL BE INSTALLED PRIOR TO INSTALLATION OF PROPOSED SIGN OR LIGHT FOUNDATION OR ITS STRUCTURE AND SHALL BE FULLY FUNCTIONAL AT THE END OF EACH WORK DAY. OTHERWISE TEMPORARY BARRIER SHALL BE PLACED AND PROPOSED PER THE CONTRACTOR'S APPROVED TRAFFIC CONTROL PLAN FOR THE ITEM TO BE INSTALLED. SIGN LOCATIONS WHERE THIS MAY APPLY INCLUDE SIGN LOCATIONS 1-12 AS SHOWN ON SIGNING PLANS.

2) ALL PROPOSED OVERHEAD SIGN STRUCTURE/PANEL INSTALLATION OR REMOVAL THAT REQUIRES SINGLE OR MULTIPLE LANE CLOSURES ALONG I-95 GENERAL PURPOSE LANES SHALL BE INSTALLED PER TTC-16.2 (OUTSIDE LANE CLOSURE OPERATION ON A FOUR-LANE ROADWAY), TTC-17.2 (INSIDE LANE CLOSURE OPERATION ON A FOUR-LANE ROADWAY), OR TTC-18.2 (MULTI-LANE CLOSURE OPERATION). LOCATIONS WHERE THIS MAY APPLY INCLUDE SIGN LOCATIONS 1-9 AND 11-12 AS SHOWN ON SIGNING PLANS.

3) ALL PROPOSED OVERHEAD SIGN STRUCTURE INSTALLATION OR REMOVAL THAT REQUIRE COMPLETE CLOSURE OF I-95 GENERAL PURPOSE LANES SHALL UTILIZE POLICE ASSISTANCE FOR A ROLLING CLOSURE THAT SHALL NOT EXCEED 20 MINUTES. CONTRACTOR SHALL COORDINATE CLOSURE WITH VDOT AT LEAST 4 WEEKS IN ADVANCE AS OUTLINED IN THE "ALLOWABLE LANE CLOSURE HOURS". SIGN LOCATIONS WHERE THIS MAY APPLY INCLUDE LOCATIONS 1-5 AND 7-8.

4) ALL SIGNAL EQUIPMENT AND PAVEMENT MARKING INSTALLATIONS AT THE INTERSECTION OF OPITZ BOULEVARD AND TELEGRAPH ROAD SHALL BE INSTALLED USING TTC-16.2 (OUTSIDE LANE CLOSURE OPERATION ON A FOUR-LANE ROADWAY), TTC-17.2 (INSIDE LANE CLOSURE OPERATION ON A FOUR-LANE ROADWAY), TTC-18.2 (MULTI-LANE CLSOURE OPERATION), TTC-26.2 (LANE CLOSURE OPERATION - NEAR SIDE OF AN INTERSECTION), TTC-27.2 (LANE CLOSURE OPERATION - FAR SIDE OF AN INTERSECTION), TTC-29.2 (TURN LANE CLOSURE OPERATION), OR TTC-30.2 (FLAGGING OPERATION AT A SIGNALIZED INTERSECTION) AS NECESSARY TO PERFORM SIGNAL AND PAVEMENT MARKING WORK AT THAT INTERSECTION.

NOTE: ALL PROPOSED SIGNING, LIGHTING, AND ITS EQUIPMENT INSTALLED OR REMOVED ALONG THE EXISTING EXPRESS LANES SHALL BE INSTALLED DURING NB EXPRESS LANES OPERATION AS DETAILED IN "RESTRICTION OF OPERATIONS" AND "ALLOWABLE LANE CLOSURE HOURS". SEE SIGNING, LIGHTING, AND ITS PLANS FOR LOCATIONS OF ALL ITEMS TO BE CONSTRUCTED AND/OR REMOVED FROM THE PROJECT LIMITS.

NOTICE TO CONTRACTOR: PRINCE WILLIAM COUNTY HAS AN ADJACENT PROJECT CONSTRUCTED BY OTHERS (PRINCE WILLIAM COUNTY NEABSCO / POTOMAC COMMUTER PARKING GARAGE) THAT WILL CONSTRUCT PEDESTRIAN AND LIGHTING FEATURES ALONG THE NORTH SIDE OF OPITZ BLVD EAST OF THE I-95 NB GP ENTRANCE RAMP. THAT PROJECT WILL INSTALL ALL PEDESTRIAN AND LIGHTING FEATURES IN THAT PROJECT AREA. THE LIGHTING WILL BE INSTALLED BY THAT PROJECT; HOWEVER, IT WILL NOT BE ACTIVATED. ACTIVATION OF ELECTRICAL SERVICE AND COMMISIONNING WILL BE THE RESPONSIBILITY OF THE CONTRACTOR FOR THE OPITZ BLVD PROJECT (THIS CONSTRUCTION PROJECT).

AFC PLANS

PROJECT	SHEET NO.
0095-076-299	IK(4)

7/11/2022
8:50:46 AM

LIMITED ACCESS HIGHWAY

By Resolution of the Highway Commission dated October 4, 1956.
By Resolution of the Highway Commission dated January 18, 1973
By Resolution of the Commonwealth Transportation Board dated April 19, 2022

PROJECT MANAGER Bimpal Shah, P.E. (703) 259-2362 (NOVA District)
SURVEYED BY, DATE H&B Surveying and Mapping, LLC (804) 330-3781, 03/09/2021
DESIGN BY Whitman, Requardt, & Associates, LLP (804) 272-8700
SUBSURFACE UTILITY BY, DATE Accumark, Inc. (804) 550-7740, 07/07/2021

COMMONWEALTH OF VIRGINIA
MITCHELL F. JOHNSON
Lic. No. 023838
PROFESSIONAL ENGINEER

Mitchell F Johnson
2022.07.13 19:17:35 -04'00'

Whitman, Requardt & Associates
Richmond, Virginia
ROADWAY ENGINEER

REVISED	STATE	STATE ROUTE	STATE PROJECT	SHEET NO.
	VA.	95	0095-076-299, C-501	IK(5)

DESIGN FEATURES RELATING TO CONSTRUCTION OR TO REGULATION AND CONTROL OF TRAFFIC MAY BE SUBJECT TO CHANGE AS DEEMED NECESSARY BY THE DEPARTMENT

TEMPORARY TRAFFIC CONTROL PLANS
TYPICAL SECTIONS

AFC PLANS

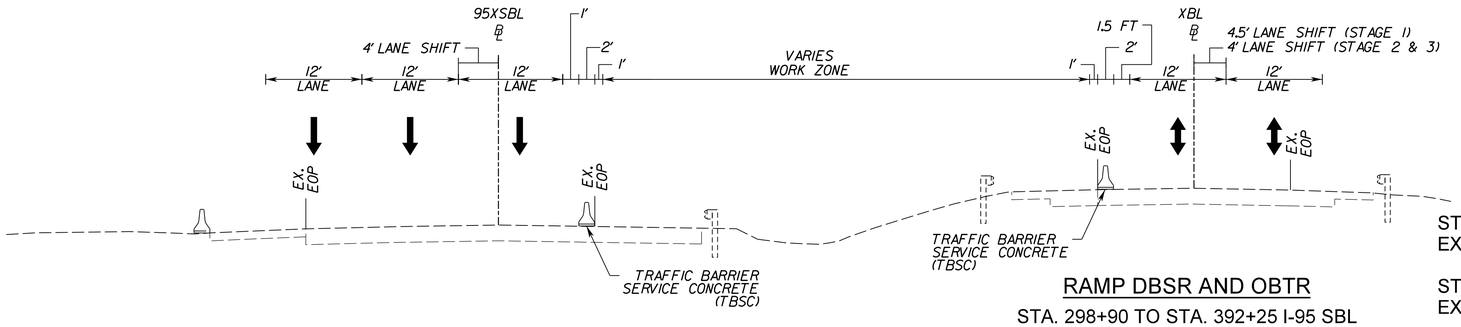

RAMP DBSR AND OBTR

STA. 298+90 TO STA. 392+25 I-95 SBL
STA. 650+70 TO STA. 744+25 I-95 XL

STAGE 1 - I -95 SBL INSIDE SHOULDER CLOSURE WITH 4' LANE SHIFT &
EXPRESS LANE RIGHT SHOULDER CLOSURE WITH 4' LANE SHIFT, CONSTRUCT RAMP DBSR.

STAGE 2 - I -95 SBL INSIDE SHOULDER CLOSURE WITH 4' LANE SHIFT &
EXPRESS LANE RIGHT SHOULDER CLOSURE WITH 4' LANE SHIFT, CONSTRUCT RAMP OBTR.

STAGE 3 - SHOULDER CLOSURES AS PER SEQUENCE OF CONSTRUCTION NOTES.

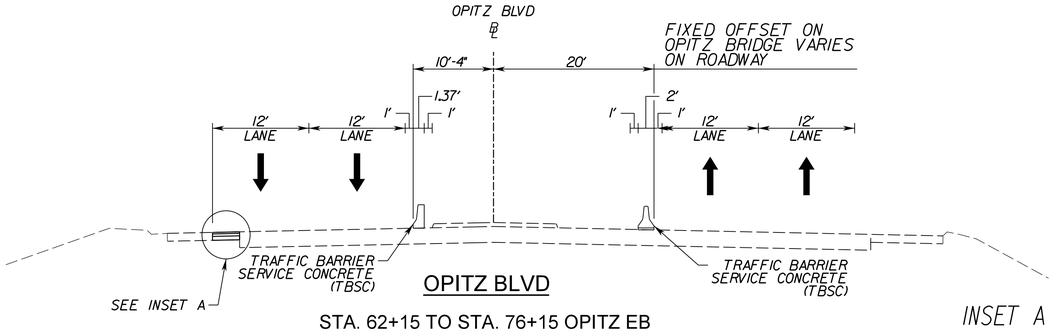

OPITZ BLVD

STA. 62+15 TO STA. 76+15 OPITZ EB
STA. 63+30 TO STA. 72+55 OPITZ WB
STAGE 1 - OPITZ BLVD SHIFT TRAFFIC TOWARDS OUTSIDE SHOULDER
DEMOLISH MEDIAN AND CONSTRUCT NEW MEDIAN COMPONENTS

INSET A

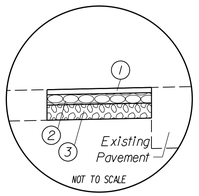

Pavement Legend

1. Asphalt Concrete Intermediate Course, Type 19.0A - 2 Inch Depth
2. Asphalt Concrete Base Course, Type BM-25.0A - 4 Inch Depth
3. Aggregate Base Material, Type 1, No. 21B - 6 Inch Depth

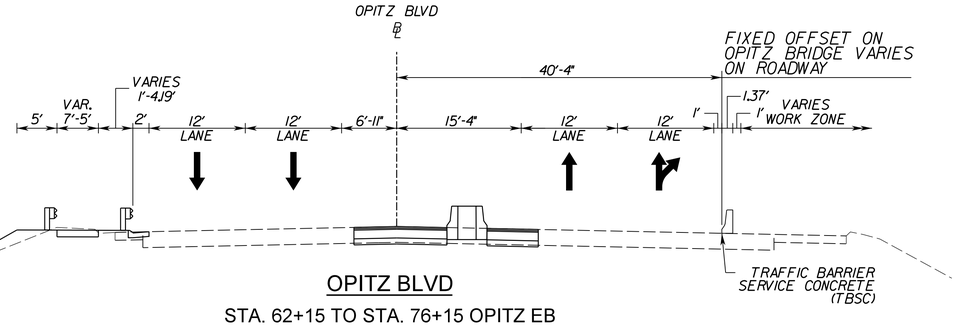

OPITZ BLVD

STA. 62+15 TO STA. 76+15 OPITZ EB
STA. 63+30 TO STA. 72+55 OPITZ WB
STAGE 3 - WIDEN OPITZ BLVD EB TOWARDS OUTSIDE CONSTRUCT SHOULDERS, CURBS, RETAINING WALL,
AND INSTALL GUARDRAIL; WIDEN BRIDGE ON SOUTH SIDE AND CONSTRUCT
OBTR-RAMP CONNECTION

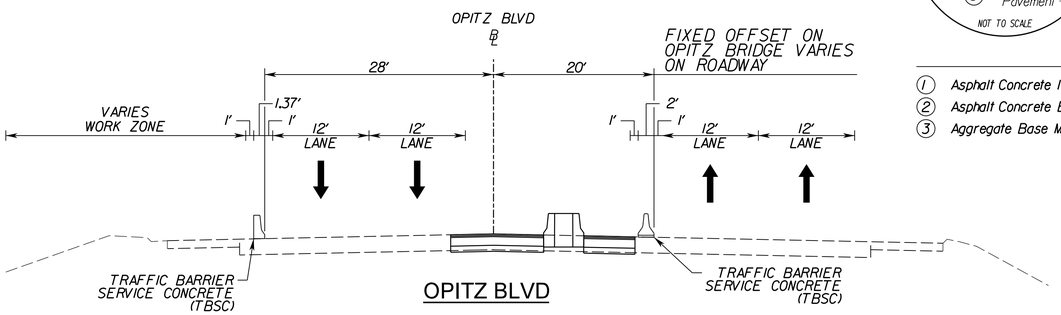

OPITZ BLVD

STA. 62+15 TO STA. 76+15 OPITZ EB
STA. 63+30 TO STA. 72+55 OPITZ WB
STAGE 2 - SHIFT OPITZ BLVD WB LANES TOWARD INSIDE
DEMOLISH AND RECONSTRUCT CURB, SIDEWALK, AND INSTALL
GUARDRAIL; WIDEN BRIDGE ON NORTH SIDE

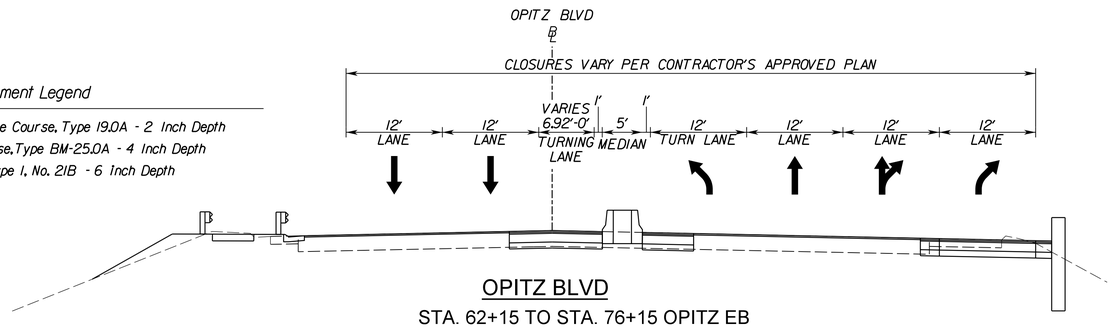

OPITZ BLVD

STA. 62+15 TO STA. 76+15 OPITZ EB
STA. 63+30 TO STA. 72+55 OPITZ WB
STAGE 4 - USE OVERNIGHT LANE CLOSURES
ON OPITZ BLVD EB & WB TO CONSTRUCT PERFORM BRIDGE DECK
MILL & OVERLAY, CONSTRUCT FINAL MEDIAN CURB, RECONSTRUCT
BRIDGE JOINTS, REMOVE PIER 3 JOINT, AND CONSTRUCT ABUTMENT MODIFICATIONS

NOT TO SCALE

PROJECT	SHEET NO.
0095-076-299	IK(5)

7/11/2022 4589300100IL(1).DGN
8:51:20 AM Plotted By: jlopez-ornelas

LIMITED ACCESS HIGHWAY By Resolution of the Highway Commission dated October 4, 1956.
By Resolution of the Highway Commission dated January 18, 1973.
By Resolution of the Commonwealth Transportation Board dated April 19, 2022

PROJECT MANAGER
SURVEYED BY, DATE
DESIGN BY
SUBSURFACE UTILITY BY, DATE

TEMPORARY TRAFFIC CONTROL PLANS
STAGE 1A

COMMONWEALTH OF VIRGINIA
MITCHELL F. JOHNSON
Lic. No. 023838
PROFESSIONAL ENGINEER

Mitchell F Johnson
2022.07.13 19:18:24 -04'00'

Whitman, Requardt & Associates
Richmond, Virginia
ROADWAY ENGINEER

REVISED	STATE	STATE ROUTE	STATE PROJECT	SHEET NO.
	VA.	95	0095-076-299,C-501	IL(1)

DESIGN FEATURES RELATING TO CONSTRUCTION OR TO REGULATION AND CONTROL OF TRAFFIC MAY BE SUBJECT TO CHANGE AS DEEMED NECESSARY BY THE DEPARTMENT

NOTES:

1. Group 2 channelizing devices shall be installed per Table 6F-2 of the Virginia Work Area Protection Manual.
2. All temporary traffic barrier shall be installed utilizing either single or double faced barrier as indicated on typical sections or as otherwise noted in plans.
3. Temporary traffic barrier shall be terminated per VWAPM Section 6F.97 and Appendix A. Appropriate blunt end protection,such as attenuators,shall be installed as required.
4. Temporary traffic barrier shall be placed a minimum 1' between the face of the concrete barrier and the edge of the travelway.
5. Construction egress shall be coordinated such that construction vehicles are not entering the highway on both the left and right side of traffic. When entrance is not in use,"TRUCKS ENTERING HIGHWAY" sign shall be completely covered.
6. Existing drainage shall be maintained within the staging areas. If existing ditches are to be filled,temporary pipes shall be designed to convey existing flow.
7. The contractor shall allow for dynamic deflection of the existing guardrail and /or traffic service barrier for placing any material or equipment.
8. Construction entrances shall be in conformance with EC-II at all applicable locations for the "active" work zone areas. The construction entrance shall include all appurtenances and materials necessary to ensure mud and debris shall be cleaned from construction equipment prior to exiting into the VDOT ROW (Travelway).

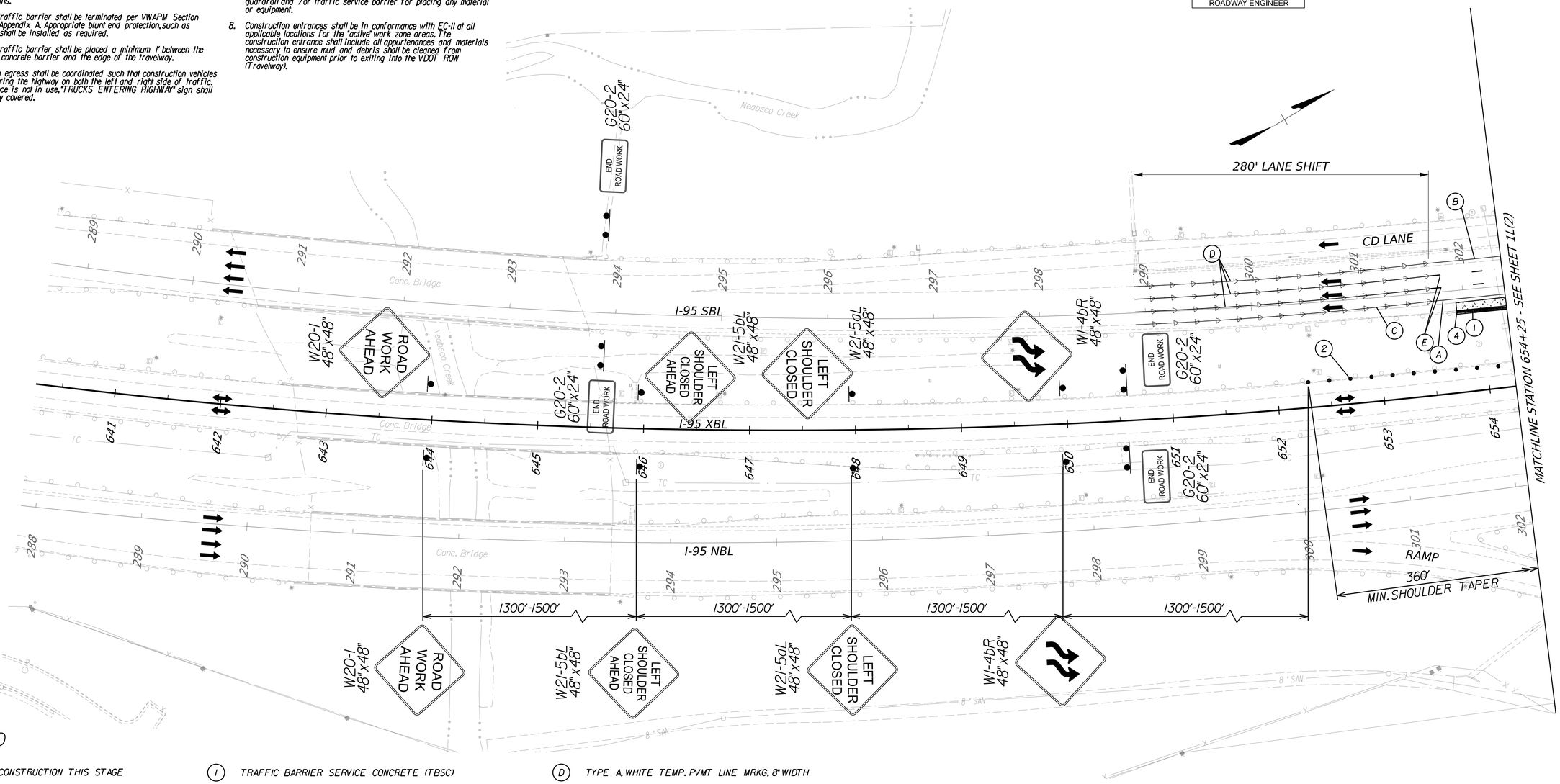

LEGEND

- CONSTRUCTION THIS STAGE
- CONSTRUCTION PREVIOUS STAGE
- SHOULDER STRENGTHENING
- TEMPORARY PAVEMENT
- TRAFFIC DIRECTION

(1) TRAFFIC BARRIER SERVICE CONCRETE (TBSC)
(2) GROUP 2 CHANNELIZING DEVICES
(3) IMPACT ATTEN. SERVICE TY.I
(4) FIXED OBJECT ATTACHMENT (TEMPORARY)
(A) TYPE A, YELLOW TEMP. PVMT LINE MRKG, 6" WIDTH
(B) TYPE A, WHITE TEMP. PVMT LINE MRKG, 6" WIDTH
(C) TYPE A, YELLOW TEMP. PVMT LINE MRKG, 8" WIDTH
(D) TYPE A, WHITE TEMP. PVMT LINE MRKG, 8" WIDTH
(E) TYPE A, WHITE TEMP. PVMT LINE MRKG, 6" WIDTH (10' LINE, 30' SPACE)
(F) TYPE A, WHITE TEMP. PVMT LINE MRKG, 8" WIDTH
(G) TYPE A, WHITE TEMP. PVMT LINE MRKG, 6" WIDTH (2' LINE, 13' SPACE)
(H) TEMPORARY STOP LINE
ONE-WAY TEMPORARY PAVEMENT MARKERS
TWO-WAY TEMPORARY PAVEMENT MARKERS
TYPE III BARRICADE

SCALE 0 50' 100'

AFC PLANS

PROJECT	SHEET NO.
0095-076-299	IL(1)

Cell Revised 12/1/12

7/11/2022 4589300100IL(2).DGN
8:51:46 AM Plotted By: jlopez-ornelas

LIMITED ACCESS HIGHWAY By Resolution of the Highway Commission dated October 4, 1956.
By Resolution of the Highway Commission dated January 18, 1973.
By Resolution of the Commonwealth Transportation Board dated April 19, 2022

PROJECT MANAGER
SURVEYED BY, DATE
DESIGN BY
SUBSURFACE UTILITY BY, DATE

TEMPORARY TRAFFIC CONTROL PLANS
STAGE 1A

COMMONWEALTH OF VIRGINIA
MITCHELL F. JOHNSON
Lic. No. 023838
PROFESSIONAL ENGINEER

Mitchell F Johnson
2022.07.13 19:18:48 -04'00'

Whitman, Requardt & Associates
Richmond, Virginia
ROADWAY ENGINEER

REVISED	STATE	STATE ROUTE	STATE PROJECT	SHEET NO.
	VA.	95	0095-076-299,C-501	IL(2)

DESIGN FEATURES RELATING TO CONSTRUCTION OR TO REGULATION AND CONTROL OF TRAFFIC MAY BE SUBJECT TO CHANGE AS DEEMED NECESSARY BY THE DEPARTMENT

NOTES:

1. Group 2 channelizing devices shall be installed per Table 6F-2 of the Virginia Work Area Protection Manual.
2. All temporary traffic barrier shall be installed utilizing either single or double faced barrier as indicated on typical sections or as otherwise noted in plans.
3. Temporary traffic barrier shall be terminated per VWAPM Section 6F.97 and Appendix A. Appropriate blunt end protection,such as attenuators,shall be installed as required.
4. Temporary traffic barrier shall be placed a minimum 1' between the face of the concrete barrier and the edge of the travelway.
5. Construction egress shall be coordinated such that construction vehicles are not entering the highway on both the left and right side of traffic. When entrance is not in use,"TRUCKS ENTERING HIGHWAY" sign shall be completely covered.
6. Existing drainage shall be maintained within the staging areas. If existing ditches are to be filled,temporary pipes shall be designed to convey existing flow.
7. The contractor shall allow for dynamic deflection of the existing guardrail and /or traffic service barrier for placing any material or equipment.
8. Construction entrances shall be in conformance with EC-11 at all applicable locations for the "active" work zone areas. The construction entrance shall include all appurtenances and materials necessary to ensure mud and debris shall be cleaned from construction equipment prior to exiting into the VDOT ROW (Travelway).

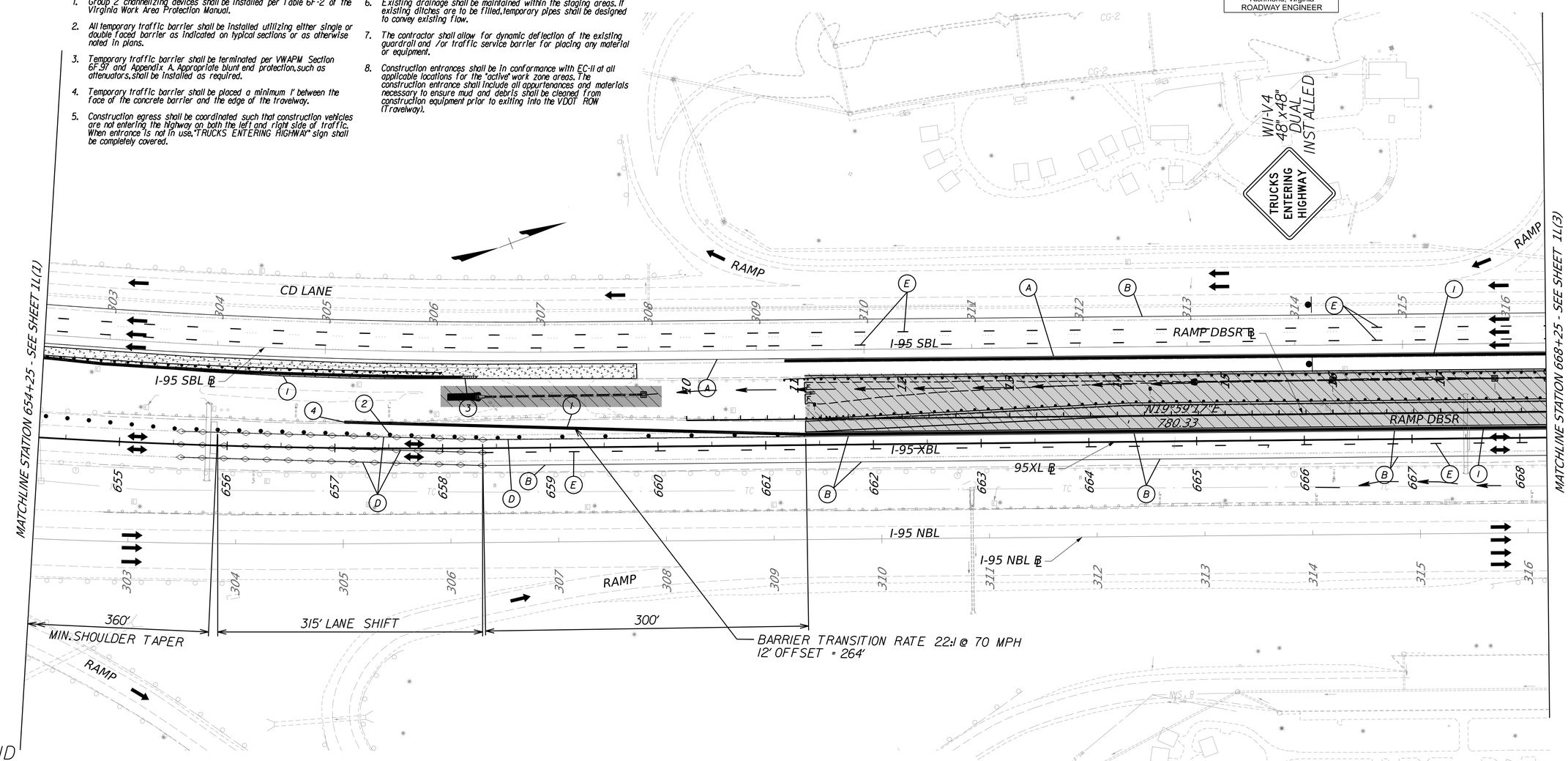

LEGEND

- CONSTRUCTION THIS STAGE
- CONSTRUCTION PREVIOUS STAGE
- SHOULDER STRENGTHENING
- TEMPORARY PAVEMENT
- TRAFFIC DIRECTION

(1) TRAFFIC BARRIER SERVICE CONCRETE (TBSC)
(2) GROUP 2 CHANNELIZING DEVICES
(3) IMPACT ATTEN. SERVICE TY.I
(4) FIXED OBJECT ATTACHMENT (TEMPORARY)
(A) TYPE A, YELLOW TEMP. PVMT LINE MRKG, 6" WIDTH
(B) TYPE A, WHITE TEMP. PVMT LINE MRKG, 6" WIDTH
(C) TYPE A, YELLOW TEMP. PVMT LINE MRKG, 8" WIDTH
(D) TYPE A, WHITE TEMP. PVMT LINE MRKG, 8" WIDTH
(E) TYPE A, WHITE TEMP. PVMT LINE MRKG, 6" WIDTH (10' LINE, 30' SPACE)
(F) TYPE A, WHITE TEMP. PVMT LINE MRKG, 8" WIDTH
(G) TYPE A, WHITE TEMP. PVMT LINE MRKG, 6" WIDTH (2' LINE, 13' SPACE)
(H) TEMPORARY STOP LINE
◁ ONE-WAY TEMPORARY PAVEMENT MARKERS
◇ TWO-WAY TEMPORARY PAVEMENT MARKERS
▨ TYPE III BARRICADE

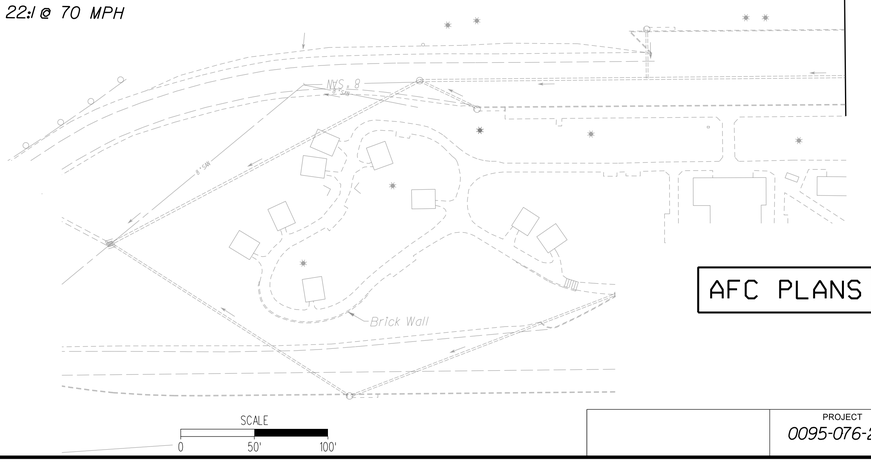

AFC PLANS

	PROJECT	SHEET NO.
	0095-076-299	IL(2)

Cell Revised 12/11/12

LIMITED ACCESS HIGHWAY

By Resolution of the Highway Commission dated October 4, 1956.
By Resolution of the Highway Commission dated January 18, 1973.
By Resolution of the Commonwealth Transportation Board dated April 19, 2022

PROJECT MANAGER
SURVEYED BY, DATE
DESIGN BY
SUBSURFACE UTILITY BY, DATE

TEMPORARY TRAFFIC CONTROL PLANS
STAGE 1A

COMMONWEALTH OF VIRGINIA
MITCHELL F. JOHNSON
Lic. No. 023836
PROFESSIONAL ENGINEER

Mitchell F Johnson
2022.07.13 19:19:09 -04'00'

Whitman, Requardt & Associates
Richmond, Virginia
ROADWAY ENGINEER

REVISED	STATE	STATE ROUTE	STATE PROJECT	SHEET NO.
	VA.	95	0095-076-299,C-501	IL(3)

DESIGN FEATURES RELATING TO CONSTRUCTION OR TO REGULATION AND CONTROL OF TRAFFIC MAY BE SUBJECT TO CHANGE AS DEEMED NECESSARY BY THE DEPARTMENT

NOTES:

1. Group 2 channelizing devices shall be installed per Table 6F-2 of the Virginia Work Area Protection Manual.
2. All temporary traffic barrier shall be installed utilizing either single or double faced barrier as indicated on typical sections or as otherwise noted in plans.
3. Temporary traffic barrier shall be terminated per VWAPM Section 6F.97 and Appendix A. Appropriate blunt end protection,such as attenuators,shall be installed as required.
4. Temporary traffic barrier shall be placed a minimum 1' between the face of the concrete barrier and the edge of the travelway.
5. Construction egress shall be coordinated such that construction vehicles are not entering the highway on both the left and right side of traffic. When entrance is not in use,"TRUCKS ENTERING HIGHWAY" sign shall be completely covered.
6. Existing drainage shall be maintained within the staging areas. If existing ditches are to be filled,temporary pipes shall be designed to convey existing flow.
7. The contractor shall allow for dynamic deflection of the existing guardrail and /or traffic service barrier for placing any material or equipment.
8. Construction entrances shall be in conformance with EC-II at all applicable locations for the "active" work zone areas. The construction entrance shall include all appurtenances and materials necessary to ensure mud and debris shall be cleaned from construction equipment prior to exiting into the VDOT ROW (Travelway).

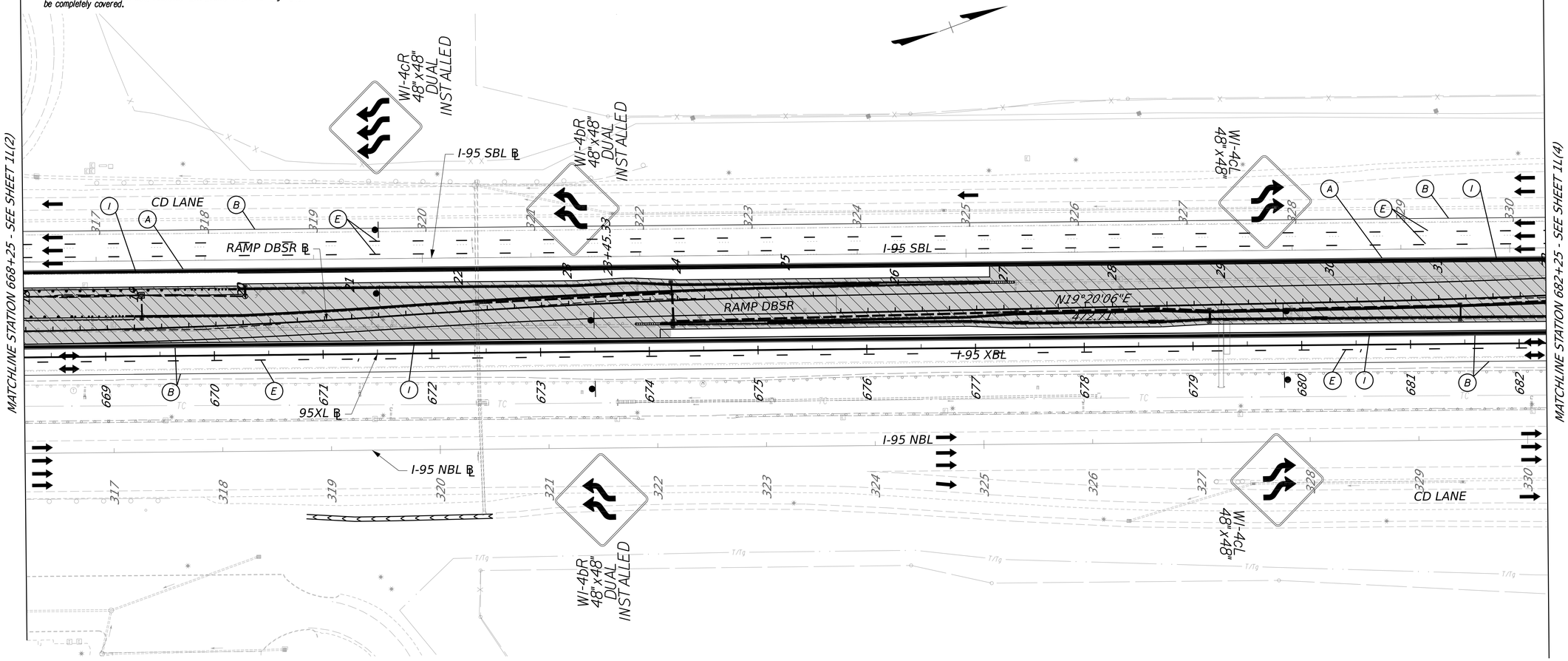

LEGEND

- CONSTRUCTION THIS STAGE
- CONSTRUCTION PREVIOUS STAGE
- SHOULDER STRENGTHENING
- TEMPORARY PAVEMENT
- TRAFFIC DIRECTION

(1) TRAFFIC BARRIER SERVICE CONCRETE (TBSC)
(2) GROUP 2 CHANNELIZING DEVICES
(3) IMPACT ATTEN. SERVICE TY.I
(4) FIXED OBJECT ATTACHMENT (TEMPORARY)
(A) TYPE A, YELLOW TEMP. PVMT LINE MRKG, 6" WIDTH
(B) TYPE A, WHITE TEMP. PVMT LINE MRKG, 6" WIDTH
(C) TYPE A, YELLOW TEMP. PVMT LINE MRKG, 8" WIDTH
(D) TYPE A, WHITE TEMP. PVMT LINE MRKG, 8" WIDTH
(E) TYPE A, WHITE TEMP. PVMT LINE MRKG, 6" WIDTH (10' LINE, 30' SPACE)
(F) TYPE A, WHITE TEMP. PVMT LINE MRKG, 8" WIDTH
(G) TYPE A, WHITE TEMP. PVMT LINE MRKG, 6" WIDTH (2' LINE, 13' SPACE)
(H) TEMPORARY STOP LINE
◁ ONE-WAY TEMPORARY PAVEMENT MARKERS
◇ TWO-WAY TEMPORARY PAVEMENT MARKERS
TYPE III BARRICADE

SCALE
0 50' 100'

AFC PLANS

PROJECT	SHEET NO.
0095-076-299	IL(3)

LIMITED ACCESS HIGHWAY

By Resolution of the Highway Commission dated October 4, 1956.
By Resolution of the Highway Commission dated January 18, 1973.
By Resolution of the Commonwealth Transportation Board dated April 19, 2022

PROJECT MANAGER
SURVEYED BY, DATE
DESIGN BY
SUBSURFACE UTILITY BY, DATE

TEMPORARY TRAFFIC CONTROL PLANS
STAGE 1A

COMMONWEALTH OF VIRGINIA
MITCHELL F. JOHNSON
Lic. No. 023838
PROFESSIONAL ENGINEER

Mitchell F Johnson
2022.07.13 19:19:26 -04'00'

Whitman, Requardt & Associates
Richmond, Virginia
ROADWAY ENGINEER

REVISED	STATE	STATE ROUTE	STATE PROJECT	SHEET NO.
	VA.	95	0095-076-299,C-501	IL(4)

DESIGN FEATURES RELATING TO CONSTRUCTION OR TO REGULATION AND CONTROL OF TRAFFIC MAY BE SUBJECT TO CHANGE AS DEEMED NECESSARY BY THE DEPARTMENT

NOTES:

1. Group 2 channelizing devices shall be installed per Table 6F-2 of the Virginia Work Area Protection Manual.
2. All temporary traffic barrier shall be installed utilizing either single or double faced barrier as indicated on typical sections or as otherwise noted in plans.
3. Temporary traffic barrier shall be terminated per VWAPM Section 6F.97 and Appendix A. Appropriate blunt end protection,such as attenuators,shall be installed as required.
4. Temporary traffic barrier shall be placed a minimum 1' between the face of the concrete barrier and the edge of the travelway.
5. Construction egress shall be coordinated such that construction vehicles are not entering the highway on both the left and right side of traffic. When entrance is not in use,"TRUCKS ENTERING HIGHWAY" sign shall be completely covered.
6. Existing drainage shall be maintained within the staging areas. If existing ditches are to be filled,temporary pipes shall be designed to convey existing flow.
7. The contractor shall allow for dynamic deflection of the existing guardrail and /or traffic service barrier for placing any material or equipment.
8. Construction entrances shall be in conformance with EC-11 at all applicable locations for the "active" work zone areas. The construction entrance shall include all appurtenances and materials necessary to ensure mud and debris shall be cleaned from construction equipment prior to exiting into the VDOT ROW (Travelway).

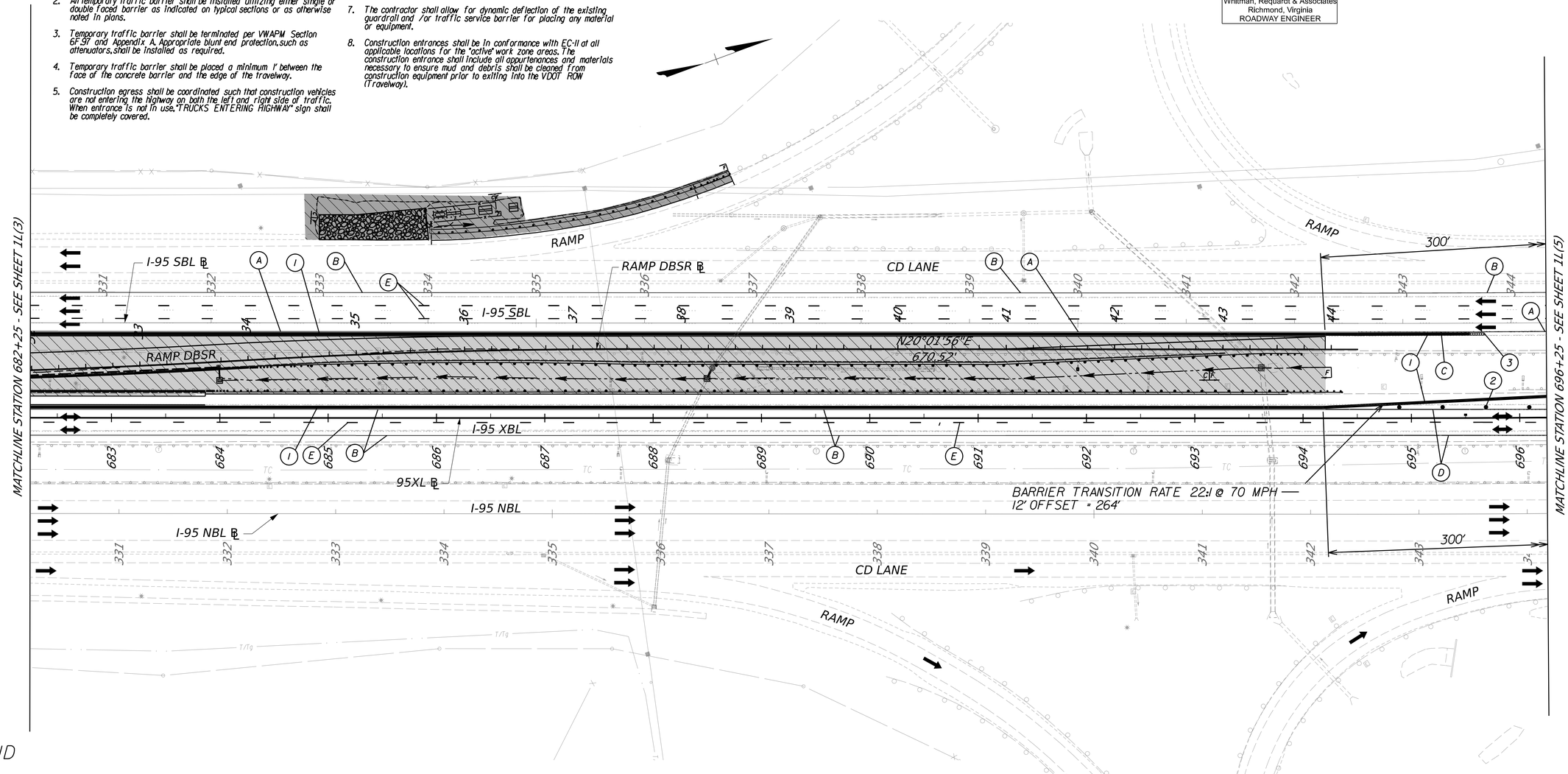

LEGEND

- CONSTRUCTION THIS STAGE
- CONSTRUCTION PREVIOUS STAGE
- SHOULDER STRENGTHENING
- TEMPORARY PAVEMENT
- TRAFFIC DIRECTION

(1) TRAFFIC BARRIER SERVICE CONCRETE (TBSC)
(2) GROUP 2 CHANNELIZING DEVICES
(3) IMPACT ATTEN. SERVICE TY.I
(4) FIXED OBJECT ATTACHMENT (TEMPORARY)
(A) TYPE A, YELLOW TEMP. PVMT LINE MRKG, 6" WIDTH
(B) TYPE A, WHITE TEMP. PVMT LINE MRKG, 6" WIDTH
(C) TYPE A, YELLOW TEMP. PVMT LINE MRKG, 8" WIDTH

(D) TYPE A, WHITE TEMP. PVMT LINE MRKG, 8" WIDTH
(E) TYPE A, WHITE TEMP. PVMT LINE MRKG, 6" WIDTH (10' LINE, 30' SPACE)
(F) TYPE A, WHITE TEMP. PVMT LINE MRKG, 8" WIDTH
(G) TYPE A, WHITE TEMP. PVMT LINE MRKG, 6" WIDTH (2' LINE, 13' SPACE)
(H) TEMPORARY STOP LINE
◁ ONE-WAY TEMPORARY PAVEMENT MARKERS
◇ TWO-WAY TEMPORARY PAVEMENT MARKERS
TYPE III BARRICADE

SCALE
0 50' 100'

AFC PLANS

	PROJECT	SHEET NO.
	0095-076-299	IL(4)

LIMITED ACCESS HIGHWAY

By Resolution of the Highway Commission dated October 4, 1956
By Resolution of the Highway Commission dated January 18, 1973
By Resolution of the Commonwealth Transportation Board dated April 19, 2022

PROJECT MANAGER
SURVEYED BY, DATE
DESIGN BY
SUBSURFACE UTILITY BY, DATE

TEMPORARY TRAFFIC CONTROL PLANS
STAGE 1A

COMMONWEALTH OF VIRGINIA
MITCHELL F. JOHNSON
Lic. No. 023838
PROFESSIONAL ENGINEER

Mitchell F Johnson
2022.07.13 19:19:47 -04'00'

Whitman, Requardt & Associates
Richmond, Virginia
ROADWAY ENGINEER

REVISED	STATE	STATE ROUTE	STATE PROJECT	SHEET NO.
	VA.	95	0095-076-299,C-501	IL(5)

DESIGN FEATURES RELATING TO CONSTRUCTION OR TO REGULATION AND CONTROL OF TRAFFIC MAY BE SUBJECT TO CHANGE AS DEEMED NECESSARY BY THE DEPARTMENT

NOTES:

1. Group 2 channelizing devices shall be installed per Table 6F-2 of the Virginia Work Area Protection Manual.
2. All temporary traffic barrier shall be installed utilizing either single or double faced barrier as indicated on typical sections or as otherwise noted in plans.
3. Temporary traffic barrier shall be terminated per VWAPM Section 6F.97 and Appendix A. Appropriate blunt end protection, such as attenuators, shall be installed as required.
4. Temporary traffic barrier shall be placed a minimum 1' between the face of the concrete barrier and the edge of the travelway.
5. Construction egress shall be coordinated such that construction vehicles are not entering the highway on both the left and right side of traffic. When entrance is not in use, "TRUCKS ENTERING HIGHWAY" sign shall be completely covered.
6. Existing drainage shall be maintained within the staging areas. If existing ditches are to be filled, temporary pipes shall be designed to convey existing flow.
7. The contractor shall allow for dynamic deflection of the existing guardrail and /or traffic service barrier for placing any material or equipment.
8. Construction entrances shall be in conformance with EC-11 at all applicable locations for the "active" work zone areas. The construction entrance shall include all appurtenances and materials necessary to ensure mud and debris shall be cleaned from construction equipment prior to exiting into the VDOT ROW (Travelway).

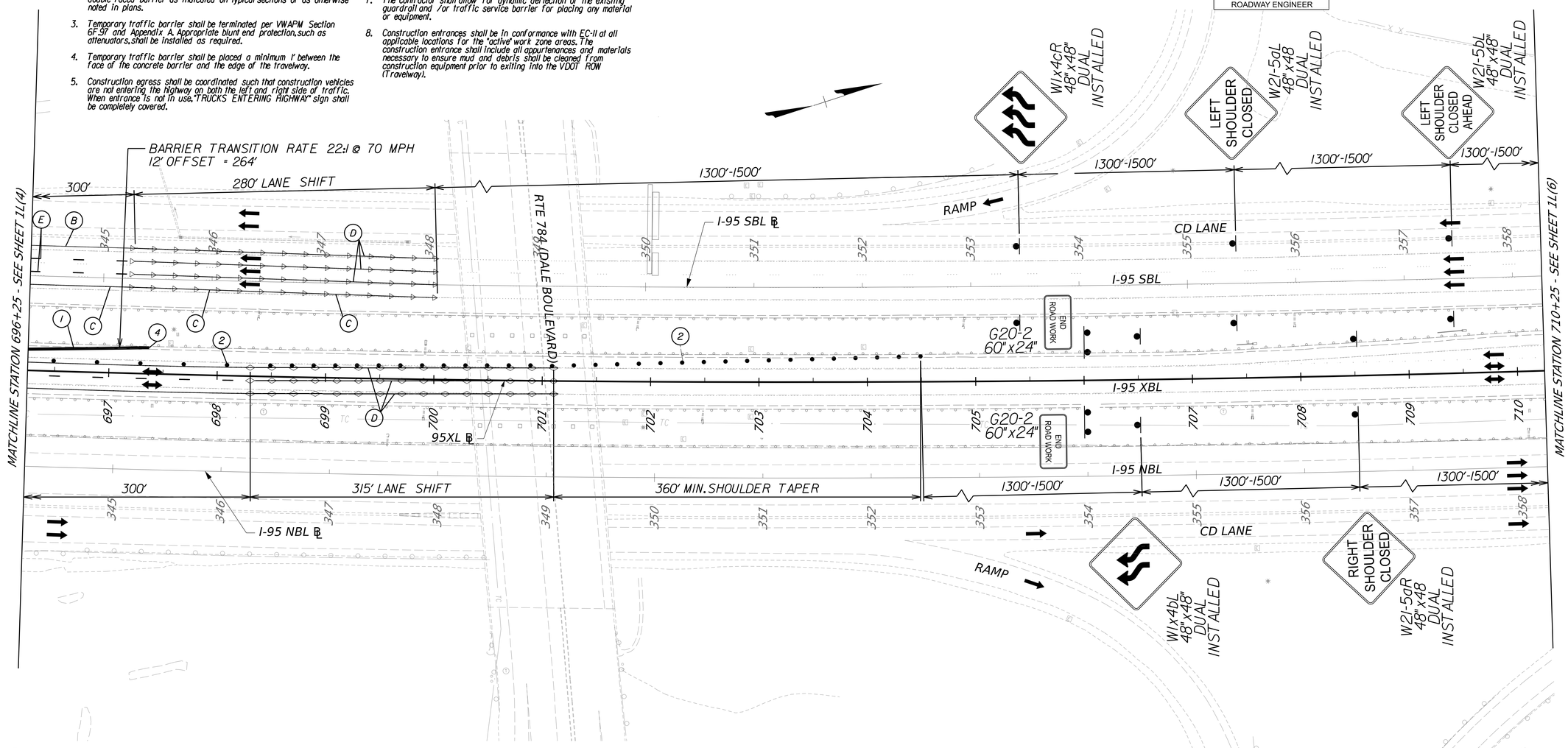

LEGEND

- CONSTRUCTION THIS STAGE
- CONSTRUCTION PREVIOUS STAGE
- SHOULDER STRENGTHENING
- TEMPORARY PAVEMENT
- TRAFFIC DIRECTION

(1) TRAFFIC BARRIER SERVICE CONCRETE (TBSC)
(2) GROUP 2 CHANNELIZING DEVICES
(3) IMPACT ATTEN. SERVICE TY.1
(4) FIXED OBJECT ATTACHMENT (TEMPORARY)
(A) TYPE A, YELLOW TEMP. PVMT LINE MRKG, 6" WIDTH
(B) TYPE A, WHITE TEMP. PVMT LINE MRKG, 6" WIDTH
(C) TYPE A, YELLOW TEMP. PVMT LINE MRKG, 8" WIDTH
(D) TYPE A, WHITE TEMP. PVMT LINE MRKG, 8" WIDTH
(E) TYPE A, WHITE TEMP. PVMT LINE MRKG, 6" WIDTH (10' LINE, 30' SPACE)
(F) TYPE A, WHITE TEMP. PVMT LINE MRKG, 8" WIDTH
(G) TYPE A, WHITE TEMP. PVMT LINE MRKG, 6" WIDTH (2' LINE, 13' SPACE)
(H) TEMPORARY STOP LINE
ONE-WAY TEMPORARY PAVEMENT MARKERS
TWO-WAY TEMPORARY PAVEMENT MARKERS
TYPE III BARRICADE

SCALE
0 50' 100'

AFC PLANS

	PROJECT	SHEET NO.
	0095-076-299	IL(5)

LIMITED ACCESS HIGHWAY

By Resolution of the Highway Commission dated October 4, 1956.
By Resolution of the Highway Commission dated January 18, 1973.
By Resolution of the Commonwealth Transportation Board dated April 19, 2022

PROJECT MANAGER
SURVEYED BY, DATE
DESIGN BY
SUBSURFACE UTILITY BY, DATE

TEMPORARY TRAFFIC CONTROL PLANS
STAGE 1A

COMMONWEALTH OF VIRGINIA
MITCHELL F. JOHNSON
Lic. No. 023838
PROFESSIONAL ENGINEER

Mitchell F Johnson
2022.07.13 19:20:10 -04'00'

Whitman, Requardt & Associates
Richmond, Virginia
ROADWAY ENGINEER

REVISED	STATE	STATE ROUTE	STATE PROJECT	SHEET NO.
	VA.	95	0095-076-299,C-501	IL(6)

DESIGN FEATURES RELATING TO CONSTRUCTION OR TO REGULATION AND CONTROL OF TRAFFIC MAY BE SUBJECT TO CHANGE AS DEEMED NECESSARY BY THE DEPARTMENT

NOTES:

1. Group 2 channelizing devices shall be installed per Table 6F-2 of the Virginia Work Area Protection Manual.
2. All temporary traffic barrier shall be installed utilizing either single or double faced barrier as indicated on typical sections or as otherwise noted in plans.
3. Temporary traffic barrier shall be terminated per VWAPM Section 6F.97 and Appendix A. Appropriate blunt end protection, such as attenuators, shall be installed as required.
4. Temporary traffic barrier shall be placed a minimum 1' between the face of the concrete barrier and the edge of the travelway.
5. Construction egress shall be coordinated such that construction vehicles are not entering the highway on both the left and right side of traffic. When entrance is not in use, "TRUCKS ENTERING HIGHWAY" sign shall be completely covered.
6. Existing drainage shall be maintained within the staging areas. If existing ditches are to be filled, temporary pipes shall be designed to convey existing flow.
7. The contractor shall allow for dynamic deflection of the existing guardrail and /or traffic service barrier for placing any material or equipment.
8. Construction entrances shall be in conformance with EC-II at all applicable locations for the "active" work zone areas. The construction entrance shall include all appurtenances and materials necessary to ensure mud and debris shall be cleaned from construction equipment prior to exiting into the VDOT ROW (Travelway).

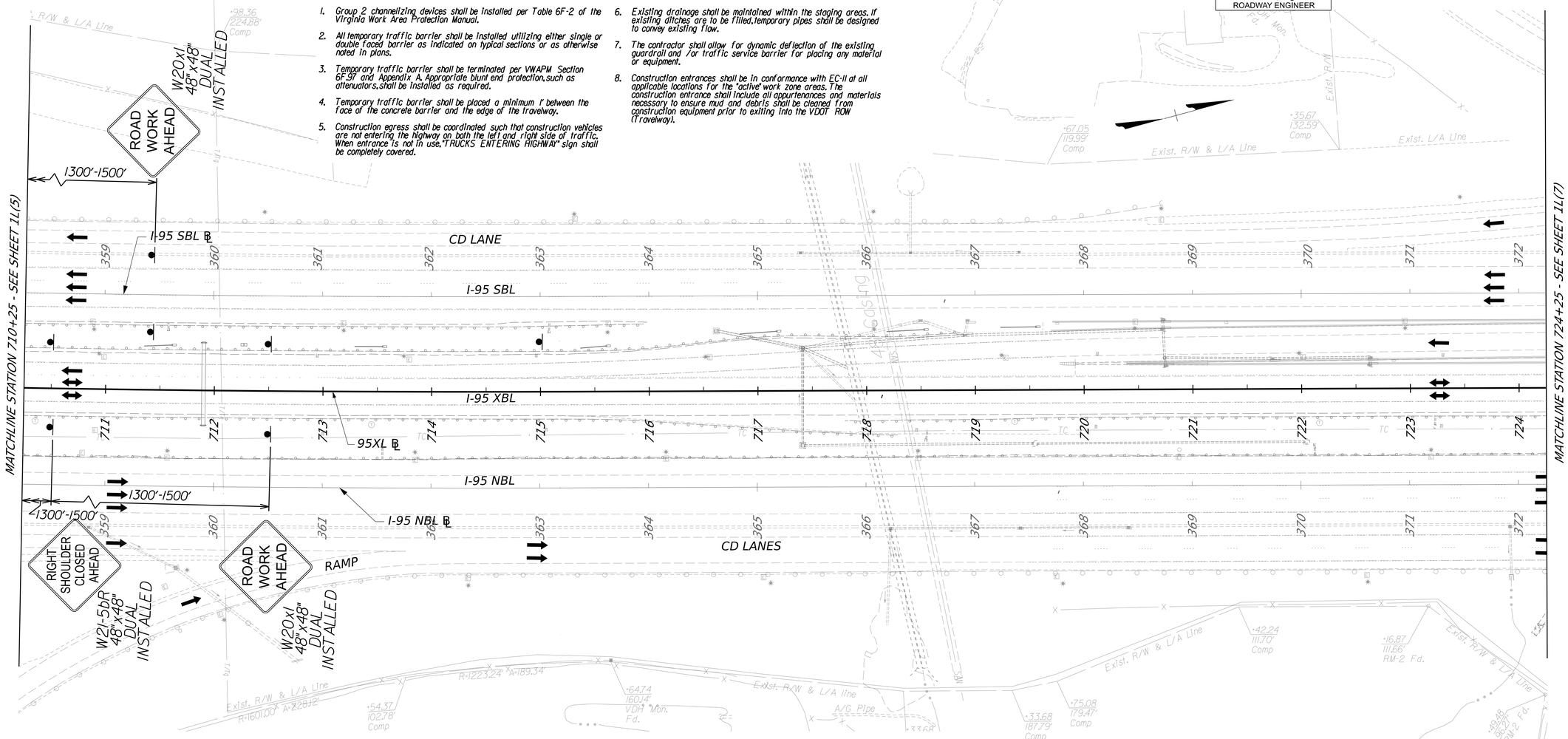

LEGEND

- CONSTRUCTION THIS STAGE
- CONSTRUCTION PREVIOUS STAGE
- SHOULDER STRENGTHENING
- TEMPORARY PAVEMENT
- TRAFFIC DIRECTION

(1) TRAFFIC BARRIER SERVICE CONCRETE (TBSC)
(2) GROUP 2 CHANNELIZING DEVICES
(3) IMPACT ATTEN. SERVICE TY.I
(4) FIXED OBJECT ATTACHMENT (TEMPORARY)
(A) TYPE A, YELLOW TEMP. PVMT LINE MRKG, 6" WIDTH
(B) TYPE A, WHITE TEMP. PVMT LINE MRKG, 6" WIDTH
(C) TYPE A, YELLOW TEMP. PVMT LINE MRKG, 8" WIDTH
(D) TYPE A, WHITE TEMP. PVMT LINE MRKG, 8" WIDTH
(E) TYPE A, WHITE TEMP. PVMT LINE MRKG, 6" WIDTH (10' LINE, 30' SPACE)
(F) TYPE A, WHITE TEMP. PVMT LINE MRKG, 8" WIDTH
(G) TYPE A, WHITE TEMP. PVMT LINE MRKG, 6" WIDTH (2' LINE, 13' SPACE)
(H) TEMPORARY STOP LINE
ONE-WAY TEMPORARY PAVEMENT MARKERS
TWO-WAY TEMPORARY PAVEMENT MARKERS
TYPE III BARRICADE

SCALE 0 50' 100'

AFC PLANS

	PROJECT	SHEET NO.
	0095-076-299	IL(6)

LIMITED ACCESS HIGHWAY

By Resolution of the Highway Commission dated October 4, 1956.
By Resolution of the Highway Commission dated January 18, 1973.
By Resolution of the Commonwealth Transportation Board dated April 19, 2022

PROJECT MANAGER
SURVEYED BY, DATE
DESIGN BY
SUBSURFACE UTILITY BY, DATE

TEMPORARY TRAFFIC CONTROL PLANS
STAGE 1A

COMMONWEALTH OF VIRGINIA
MITCHELL F. JOHNSON
Lic. No. 023838
PROFESSIONAL ENGINEER

Mitchell F Johnson
2022.07.13 19:20:26 -04'00'

Whitman, Requardt & Associates
Richmond, Virginia
ROADWAY ENGINEER

REVISED	STATE	STATE ROUTE	STATE PROJECT	SHEET NO.
	VA.	95	0095-076-299,C-501	IL(7)

DESIGN FEATURES RELATING TO CONSTRUCTION OR TO REGULATION AND CONTROL OF TRAFFIC MAY BE SUBJECT TO CHANGE AS DEEMED NECESSARY BY THE DEPARTMENT

NOTES:

1. Group 2 channelizing devices shall be installed per Table 6F-2 of the Virginia Work Area Protection Manual.
2. All temporary traffic barrier shall be installed utilizing either single or double faced barrier as indicated on typical sections or as otherwise noted in plans.
3. Temporary traffic barrier shall be terminated per VWAPM Section 6F.97 and Appendix A. Appropriate blunt end protection, such as attenuators, shall be installed as required.
4. Temporary traffic barrier shall be placed a minimum 1' between the face of the concrete barrier and the edge of the travelway.
5. Construction egress shall be coordinated such that construction vehicles are not entering the highway on both the left and right side of traffic. When entrance is not in use, "TRUCKS ENTERING HIGHWAY" sign shall be completely covered.
6. Existing drainage shall be maintained within the staging areas. If existing ditches are to be filled, temporary pipes shall be designed to convey existing flow.
7. The contractor shall allow for dynamic deflection of the existing guardrail and /or traffic service barrier for placing any material or equipment.
8. Construction entrances shall be in conformance with EC-11 at all applicable locations for the "active" work zone areas. The construction entrance shall include all appurtenances and materials necessary to ensure mud and debris shall be cleaned from construction equipment prior to exiting into the VDOT ROW (Travelway).

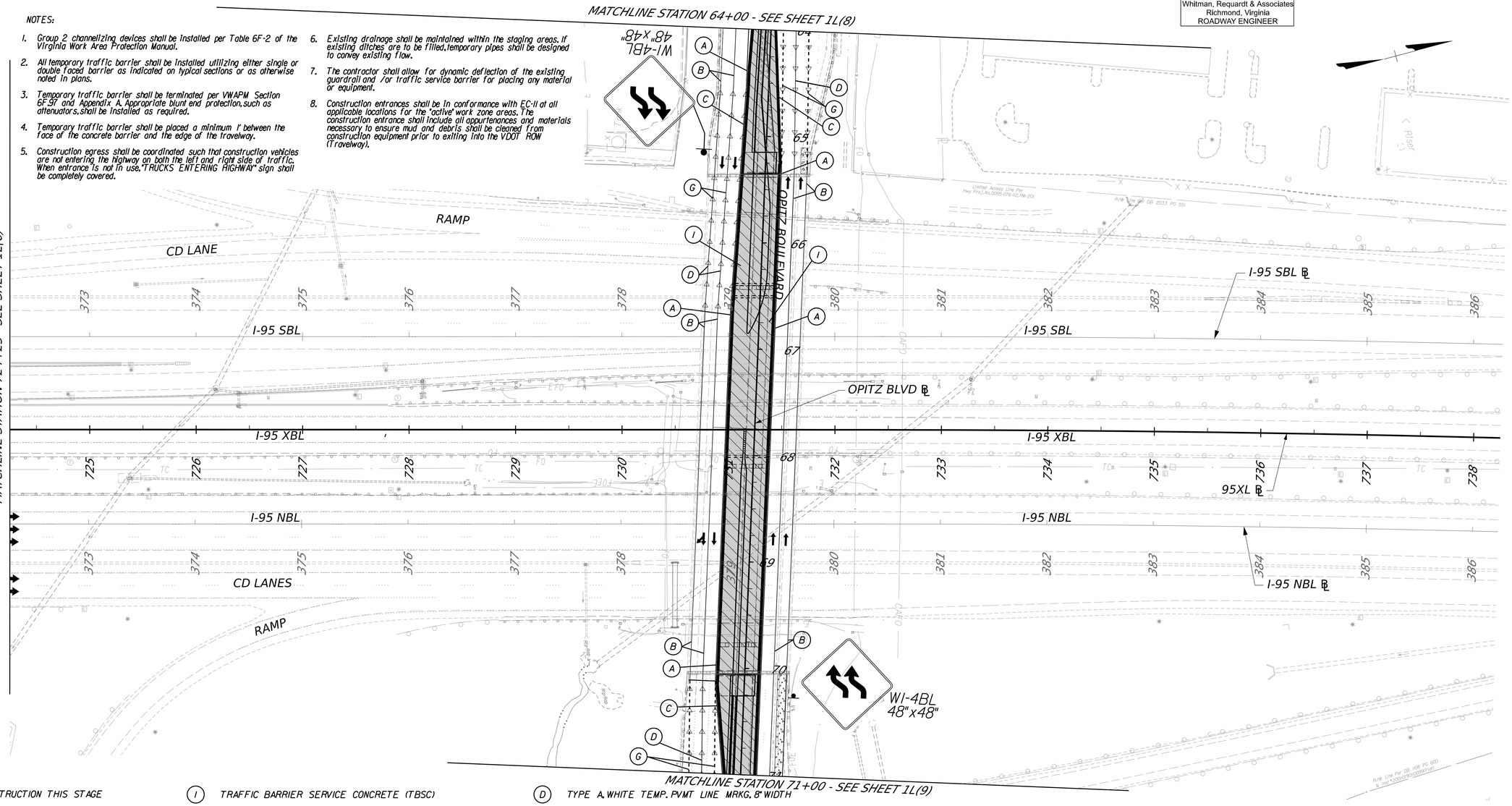

LEGEND

- CONSTRUCTION THIS STAGE
- CONSTRUCTION PREVIOUS STAGE
- SHOULDER STRENGTHENING
- TEMPORARY PAVEMENT
- TRAFFIC DIRECTION

(1) TRAFFIC BARRIER SERVICE CONCRETE (TBSC)
(2) GROUP 2 CHANNELIZING DEVICES
(3) IMPACT ATTEN. SERVICE TY.1
(4) FIXED OBJECT ATTACHMENT (TEMPORARY)
(A) TYPE A, YELLOW TEMP. PVMT LINE MRKG, 6" WIDTH
(B) TYPE A, WHITE TEMP. PVMT LINE MRKG, 6" WIDTH
(C) TYPE A, YELLOW TEMP. PVMT LINE MRKG, 8" WIDTH
(D) TYPE A, WHITE TEMP. PVMT LINE MRKG, 8" WIDTH
(E) TYPE A, WHITE TEMP. PVMT LINE MRKG, 6" WIDTH (10' LINE, 30' SPACE)
(F) TYPE A, WHITE TEMP. PVMT LINE MRKG, 8" WIDTH
(G) TYPE A, WHITE TEMP. PVMT LINE MRKG, 6" WIDTH (2' LINE, 13' SPACE)
(H) TEMPORARY STOP LINE
ONE-WAY TEMPORARY PAVEMENT MARKERS
TWO-WAY TEMPORARY PAVEMENT MARKERS
TYPE III BARRICADE

SCALE 0 50' 100'

AFC PLANS

	PROJECT	SHEET NO.
	0095-076-299	IL(7)

LIMITED ACCESS HIGHWAY By Resolution of the Highway Commission dated October 4, 1956
By Resolution of the Highway Commission dated January 18, 1973
By Resolution of the Commonwealth Transportation Board dated April 19, 2022

PROJECT MANAGER _____
SURVEYED BY, DATE _____
DESIGN BY _____
SUBSURFACE UTILITY BY, DATE _____

TEMPORARY TRAFFIC CONTROL PLANS
STAGE 1A

REVISED	STATE	STATE ROUTE	STATE PROJECT	SHEET NO.
	VA.	95	0095-076-299,C-501	IL(8)

COMMONWEALTH OF VIRGINIA
MITCHELL F. JOHNSON
Lic. No. 023838
PROFESSIONAL ENGINEER

Mitchell F Johnson
2022.07.13 19:20:44 -04'00'

Whitman, Requardt & Associates
Richmond, Virginia
ROADWAY ENGINEER

DESIGN FEATURES RELATING TO CONSTRUCTION OR TO REGULATION AND CONTROL OF TRAFFIC MAY BE SUBJECT TO CHANGE AS DEEMED NECESSARY BY THE DEPARTMENT

NOTES:

1. *Group 2 channelizing devices shall be installed per Table 6F-2 of the Virginia Work Area Protection Manual.*
2. *All temporary traffic barrier shall be installed utilizing either single or double faced barrier as indicated on typical sections or as otherwise noted in plans.*
3. *Temporary traffic barrier shall be terminated per VWAPM Section 6F.97 and Appendix A. Appropriate blunt end protection,such as attenuators,shall be installed as required.*
4. *Temporary traffic barrier shall be placed a minimum 1' between the face of the concrete barrier and the edge of the travelway.*
5. *Construction egress shall be coordinated such that construction vehicles are not entering the highway on both the left and right side of traffic. When entrance is not in use,"TRUCKS ENTERING HIGHWAY" sign shall be completely covered.*
6. *Existing drainage shall be maintained within the staging areas. If existing ditches are to be filled,temporary pipes shall be designed to convey existing flow.*
7. *The contractor shall allow for dynamic deflection of the existing guardrail and /or traffic service barrier for placing any material or equipment.*
8. *Construction entrances shall be in conformance with EC-II at all applicable locations for the "active" work zone areas. The construction entrance shall include all appurtenances and materials necessary to ensure mud and debris shall be cleaned from construction equipment prior to exiting into the VDOT ROW (Travelway).*

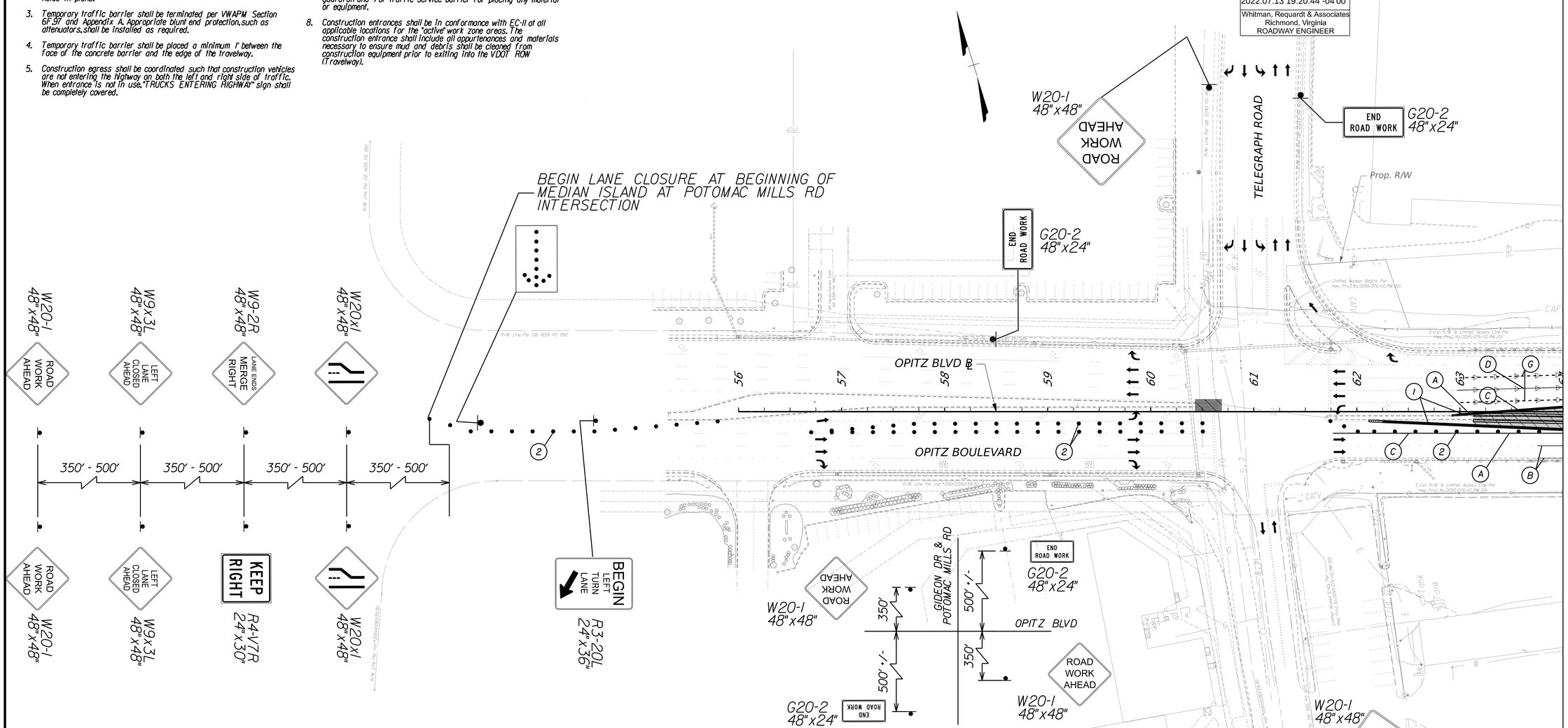

INTERSECTION SIGN LAYOUT

LEGEND

- CONSTRUCTION THIS STAGE
- CONSTRUCTION PREVIOUS STAGE
- SHOULDER STRENGTHENING
- TEMPORARY PAVEMENT
- TRAFFIC DIRECTION

(1) TRAFFIC BARRIER SERVICE CONCRETE (TBSC)
(2) GROUP 2 CHANNELIZING DEVICES
(3) IMPACT ATTEN. SERVICE TY.I
(4) FIXED OBJECT ATTACHMENT (TEMPORARY)
(A) TYPE A, YELLOW TEMP. PVMT LINE MRKG, 6" WIDTH
(B) TYPE A, WHITE TEMP. PVMT LINE MRKG, 6" WIDTH
(C) TYPE A, YELLOW TEMP. PVMT LINE MRKG, 8" WIDTH
(D) TYPE A, WHITE TEMP. PVMT LINE MRKG, 8" WIDTH
(E) TYPE A, WHITE TEMP. PVMT LINE MRKG, 6" WIDTH (10' LINE, 30' SPACE)
(F) TYPE A, WHITE TEMP. PVMT LINE MRKG, 8" WIDTH
(G) TYPE A, WHITE TEMP. PVMT LINE MRKG, 6" WIDTH (2' LINE, 13' SPACE)
(H) TEMPORARY STOP LINE
◁ ONE-WAY TEMPORARY PAVEMENT MARKERS
◇ TWO-WAY TEMPORARY PAVEMENT MARKERS
▨ TYPE III BARRICADE

SCALE 0 50' 100'

PROJECT	SHEET NO.
0095-076-299	IL(8)

LIMITED ACCESS HIGHWAY By Resolution of the Highway Commission dated October 4, 1956.
By Resolution of the Highway Commission dated January 18, 1973.
By Resolution of the Commonwealth Transportation Board dated April 19, 2022

PROJECT MANAGER _____
SURVEYED BY, DATE _____
DESIGN BY _____
SUBSURFACE UTILITY BY, DATE _____

TEMPORARY TRAFFIC CONTROL PLANS
STAGE 1A

COMMONWEALTH OF VIRGINIA
MITCHELL F. JOHNSON
Lic. No. 023838
PROFESSIONAL ENGINEER

Mitchell F Johnson
2022.07.13 19:21:09 -04'00'
Whitman, Requardt & Associates
Richmond, Virginia
ROADWAY ENGINEER

REVISED	STATE	STATE ROUTE	STATE PROJECT	SHEET NO.
	VA.	95	0095-076-299,C-501	IL(9)

DESIGN FEATURES RELATING TO CONSTRUCTION OR TO REGULATION AND CONTROL OF TRAFFIC MAY BE SUBJECT TO CHANGE AS DEEMED NECESSARY BY THE DEPARTMENT

NOTES:

1. Group 2 channelizing devices shall be installed per Table 6F-2 of the Virginia Work Area Protection Manual.
2. All temporary traffic barrier shall be installed utilizing either single or double faced barrier as indicated on typical sections or as otherwise noted in plans.
3. Temporary traffic barrier shall be terminated per VWAPM Section 6F.97 and Appendix A. Appropriate blunt end protection,such as attenuators,shall be installed as required.
4. Temporary traffic barrier shall be placed a minimum 1' between the face of the concrete barrier and the edge of the travelway.
5. Construction egress shall be coordinated such that construction vehicles are not entering the highway on both the left and right side of traffic. When entrance is not in use,"TRUCKS ENTERING HIGHWAY" sign shall be completely covered.
6. Existing drainage shall be maintained within the staging areas. If existing ditches are to be filled,temporary pipes shall be designed to convey existing flow.
7. The contractor shall allow for dynamic deflection of the existing guardrail and /or traffic service barrier for placing any material or equipment.
8. Construction entrances shall be in conformance with EC-II at all applicable locations for the "active" work zone areas. The construction entrance shall include all appurtenances and materials necessary to ensure mud and debris shall be cleaned from construction equipment prior to exiting into the VDOT ROW (Travelway).

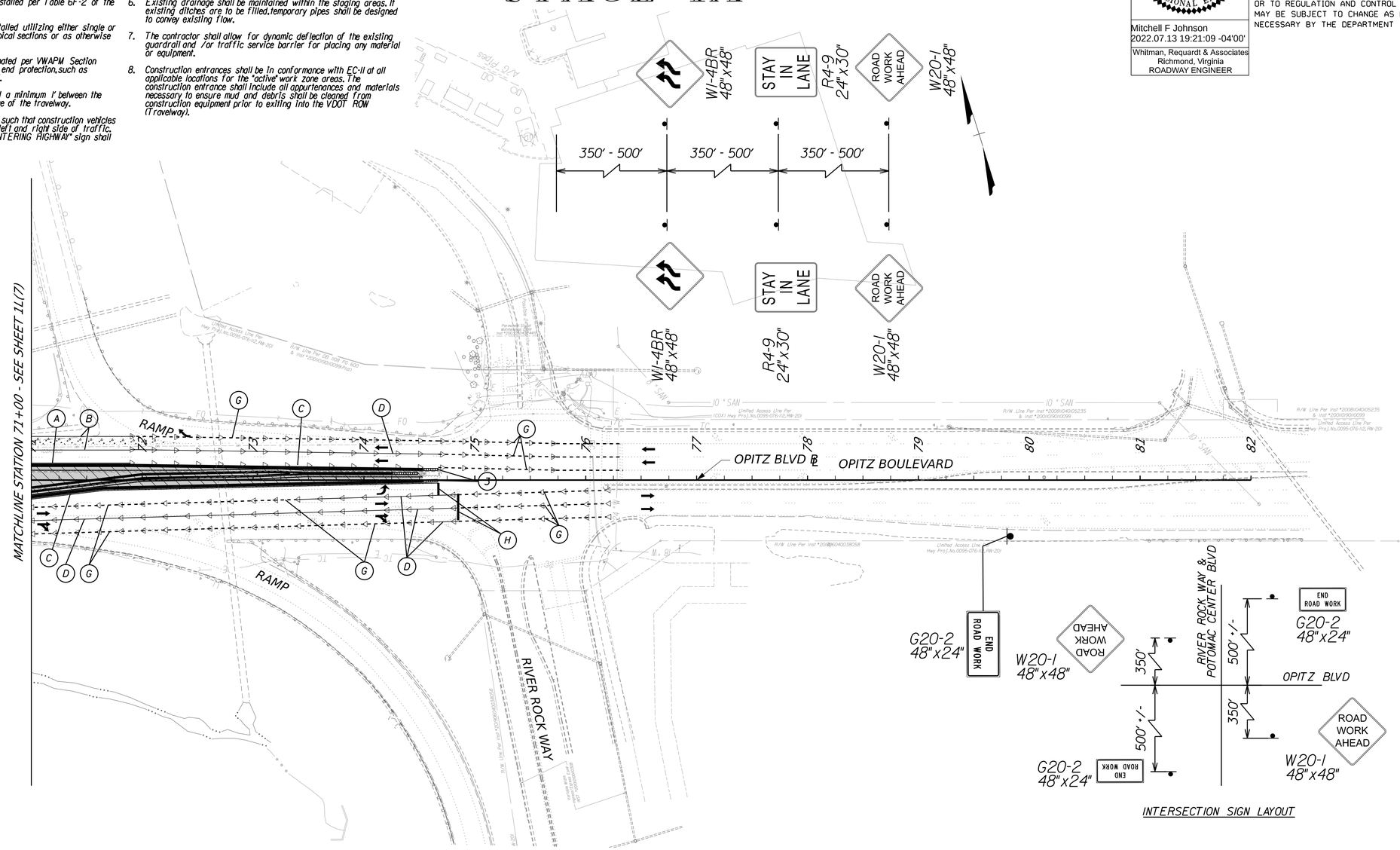

INTERSECTION SIGN LAYOUT

LEGEND

- CONSTRUCTION THIS STAGE
- CONSTRUCTION PREVIOUS STAGE
- SHOULDER STRENGTHENING
- TEMPORARY PAVEMENT
- TRAFFIC DIRECTION

(1) TRAFFIC BARRIER SERVICE CONCRETE (TBSC)
(2) GROUP 2 CHANNELIZING DEVICES
(3) IMPACT ATTEN. SERVICE TY.I
(4) FIXED OBJECT ATTACHMENT (TEMPORARY)
(A) TYPE A, YELLOW TEMP. PVMT LINE MRKG, 6" WIDTH
(B) TYPE A, WHITE TEMP. PVMT LINE MRKG, 6" WIDTH
(C) TYPE A, YELLOW TEMP. PVMT LINE MRKG, 8" WIDTH
(D) TYPE A, WHITE TEMP. PVMT LINE MRKG, 8" WIDTH
(E) TYPE A, WHITE TEMP. PVMT LINE MRKG, 6" WIDTH (10' LINE, 30' SPACE)
(F) TYPE A, WHITE TEMP. PVMT LINE MRKG, 8" WIDTH
(G) TYPE A, WHITE TEMP. PVMT LINE MRKG, 6" WIDTH (2' LINE, 13' SPACE)
(H) TEMPORARY STOP LINE
ONE-WAY TEMPORARY PAVEMENT MARKERS
TWO-WAY TEMPORARY PAVEMENT MARKERS
TYPE III BARRICADE

SCALE 0 50' 100'

AFC PLANS

PROJECT	SHEET NO.
0095-076-299	IL(9)

LIMITED ACCESS HIGHWAY

By Resolution of the Highway Commission dated October 4, 1956.
By Resolution of the Highway Commission dated January 18, 1973.
By Resolution of the Commonwealth Transportation Board dated April 19, 2022

PROJECT MANAGER
SURVEYED BY, DATE
DESIGN BY
SUBSURFACE UTILITY BY, DATE

TEMPORARY TRAFFIC CONTROL PLANS
STAGE 2A

COMMONWEALTH OF VIRGINIA
MITCHELL F. JOHNSON
Lic. No. 023838
PROFESSIONAL ENGINEER

Mitchell F Johnson
2022.07.13 19:22:15 -04'00'

Whitman, Requardt & Associates
Richmond, Virginia
ROADWAY ENGINEER

REVISED	STATE	STATE ROUTE	STATE PROJECT	SHEET NO.
	VA.	95	0095-076-299,C-501	IN(1)

DESIGN FEATURES RELATING TO CONSTRUCTION OR TO REGULATION AND CONTROL OF TRAFFIC MAY BE SUBJECT TO CHANGE AS DEEMED NECESSARY BY THE DEPARTMENT

NOTES:

1. Group 2 channelizing devices shall be installed per Table 6F-2 of the Virginia Work Area Protection Manual.
2. All temporary traffic barrier shall be installed utilizing either single or double faced barrier as indicated on typical sections or as otherwise noted in plans.
3. Temporary traffic barrier shall be terminated per VWAPM Section 6F.97 and Appendix A. Appropriate blunt end protection,such as attenuators,shall be installed as required.
4. Temporary traffic barrier shall be placed a minimum 1' between the face of the concrete barrier and the edge of the travelway.
5. Construction egress shall be coordinated such that construction vehicles are not entering the highway on both the left and right side of traffic. When entrance is not in use,"TRUCKS ENTERING HIGHWAY" sign shall be completely covered.
6. Existing drainage shall be maintained within the staging areas. If existing ditches are to be filled,temporary pipes shall be designed to convey existing flow.
7. The contractor shall allow for dynamic deflection of the existing guardrail and /or traffic service barrier for placing any material or equipment.
8. Construction entrances shall be in conformance with EC-11 at all applicable locations for the "active" work zone areas. The construction entrance shall include all appurtenances and materials necessary to ensure mud and debris shall be cleaned from construction equipment prior to exiting into the VDOT ROW (Travelway).

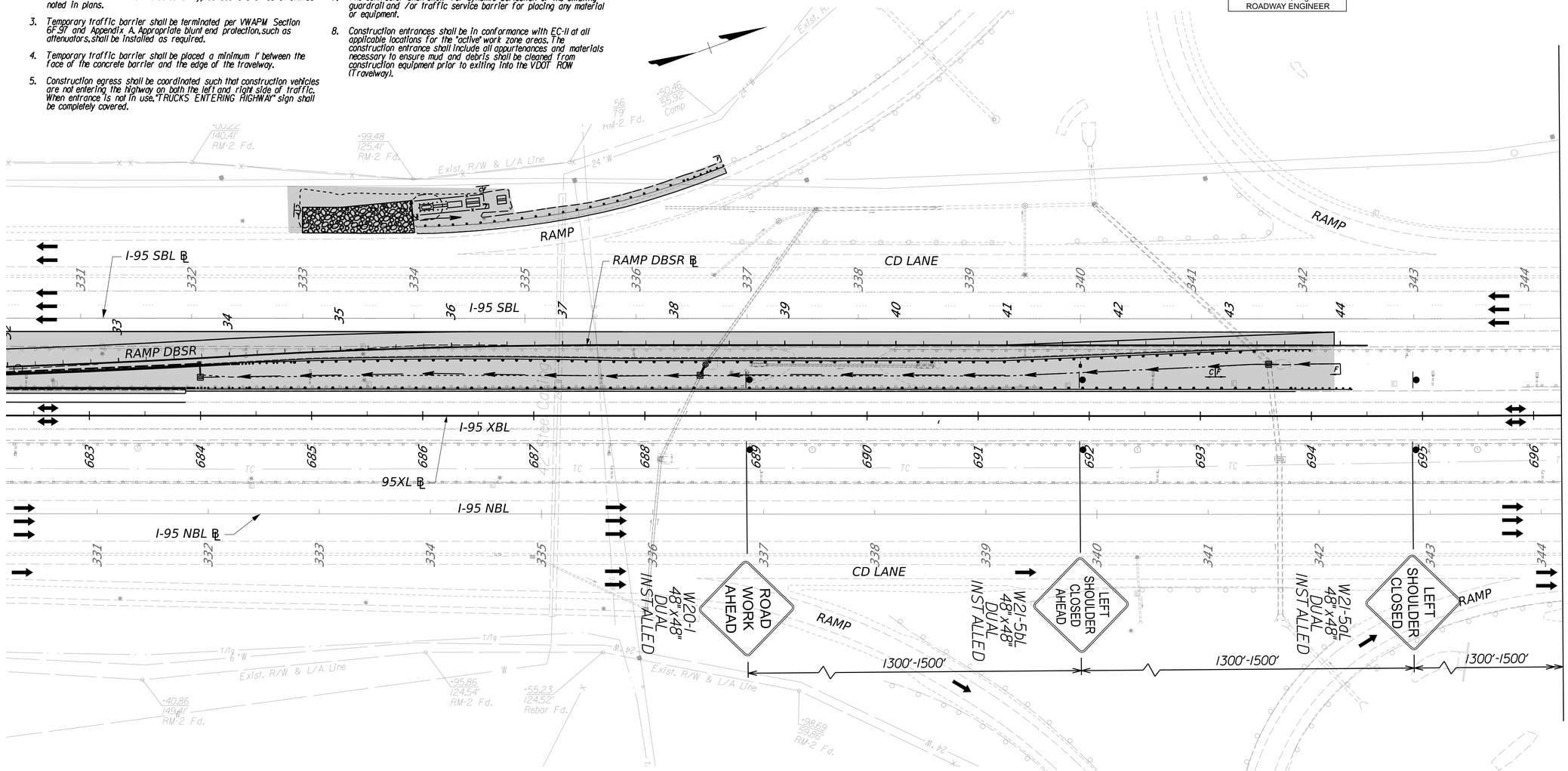

LEGEND

- CONSTRUCTION THIS STAGE
- CONSTRUCTION PREVIOUS STAGE
- SHOULDER STRENGTHENING
- TEMPORARY PAVEMENT
- TRAFFIC DIRECTION

(1) TRAFFIC BARRIER SERVICE CONCRETE (TBSC)
(2) GROUP 2 CHANNELIZING DEVICES
(3) IMPACT ATTEN. SERVICE TY.I
(4) FIXED OBJECT ATTACHMENT (TEMPORARY)
(A) TYPE A, YELLOW TEMP. PVMT LINE MRKG, 6" WIDTH
(B) TYPE A, WHITE TEMP. PVMT LINE MRKG, 6" WIDTH
(C) TYPE A, YELLOW TEMP. PVMT LINE MRKG, 8" WIDTH
(D) TYPE A, WHITE TEMP. PVMT LINE MRKG, 8" WIDTH
(E) TYPE A, WHITE TEMP. PVMT LINE MRKG, 6" WIDTH (10' LINE, 30' SPACE)
(F) TYPE A, WHITE TEMP. PVMT LINE MRKG, 8" WIDTH
(G) TYPE A, WHITE TEMP. PVMT LINE MRKG, 6" WIDTH (2' LINE, 13' SPACE)
(H) TEMPORARY STOP LINE
◁ ONE-WAY TEMPORARY PAVEMENT MARKERS
◇ TWO-WAY TEMPORARY PAVEMENT MARKERS
TYPE III BARRICADE

SCALE 0 50' 100'

AFC PLANS

PROJECT	SHEET NO.
0095-076-299	IN(1)

LIMITED ACCESS HIGHWAY By Resolution of the Highway Commission dated October 4, 1956.
By Resolution of the Highway Commission dated January 18, 1973.
By Resolution of the Commonwealth Transportation Board dated April 19, 2022

PROJECT MANAGER _____
SURVEYED BY, DATE _____
DESIGN BY _____
SUBSURFACE UTILITY BY, DATE _____

TEMPORARY TRAFFIC CONTROL PLANS
STAGE 2A

COMMONWEALTH OF VIRGINIA
MITCHELL F. JOHNSON
Lic. No. 023838
PROFESSIONAL ENGINEER

Mitchell F Johnson
2022.07.13 19:22:34 -04'00'
Whitman, Requardt & Associates
Richmond, Virginia
ROADWAY ENGINEER

REVISED	STATE	STATE ROUTE	STATE PROJECT	SHEET NO.
	VA.	95	0095-076-299,C-501	IN(2)

DESIGN FEATURES RELATING TO CONSTRUCTION OR TO REGULATION AND CONTROL OF TRAFFIC MAY BE SUBJECT TO CHANGE AS DEEMED NECESSARY BY THE DEPARTMENT

NOTES:

1. Group 2 channelizing devices shall be installed per Table 6F-2 of the Virginia Work Area Protection Manual.
2. All temporary traffic barrier shall be installed utilizing either single or double faced barrier as indicated on typical sections or as otherwise noted in plans.
3. Temporary traffic barrier shall be terminated per VWAPM Section 6F.9f and Appendix A. Appropriate blunt end protection,such as attenuators,shall be installed as required.
4. Temporary traffic barrier shall be placed a minimum 1' between the face of the concrete barrier and the edge of the travelway.
5. Construction egress shall be coordinated such that construction vehicles are not entering the highway on both the left and right side of traffic. When entrance is not in use,"TRUCKS ENTERING HIGHWAY" sign shall be completely covered.
6. Existing drainage shall be maintained within the staging areas. If existing ditches are to be filled,temporary pipes shall be designed to convey existing flow.
7. The contractor shall allow for dynamic deflection of the existing guardrail and /or traffic service barrier for placing any material or equipment.
8. Construction entrances shall be in conformance with EC-II at all applicable locations for the "active" work zone areas. The construction entrance shall include all appurtenances and materials necessary to ensure mud and debris shall be cleaned from construction equipment prior to exiting into the VDOT ROW (Travelway).

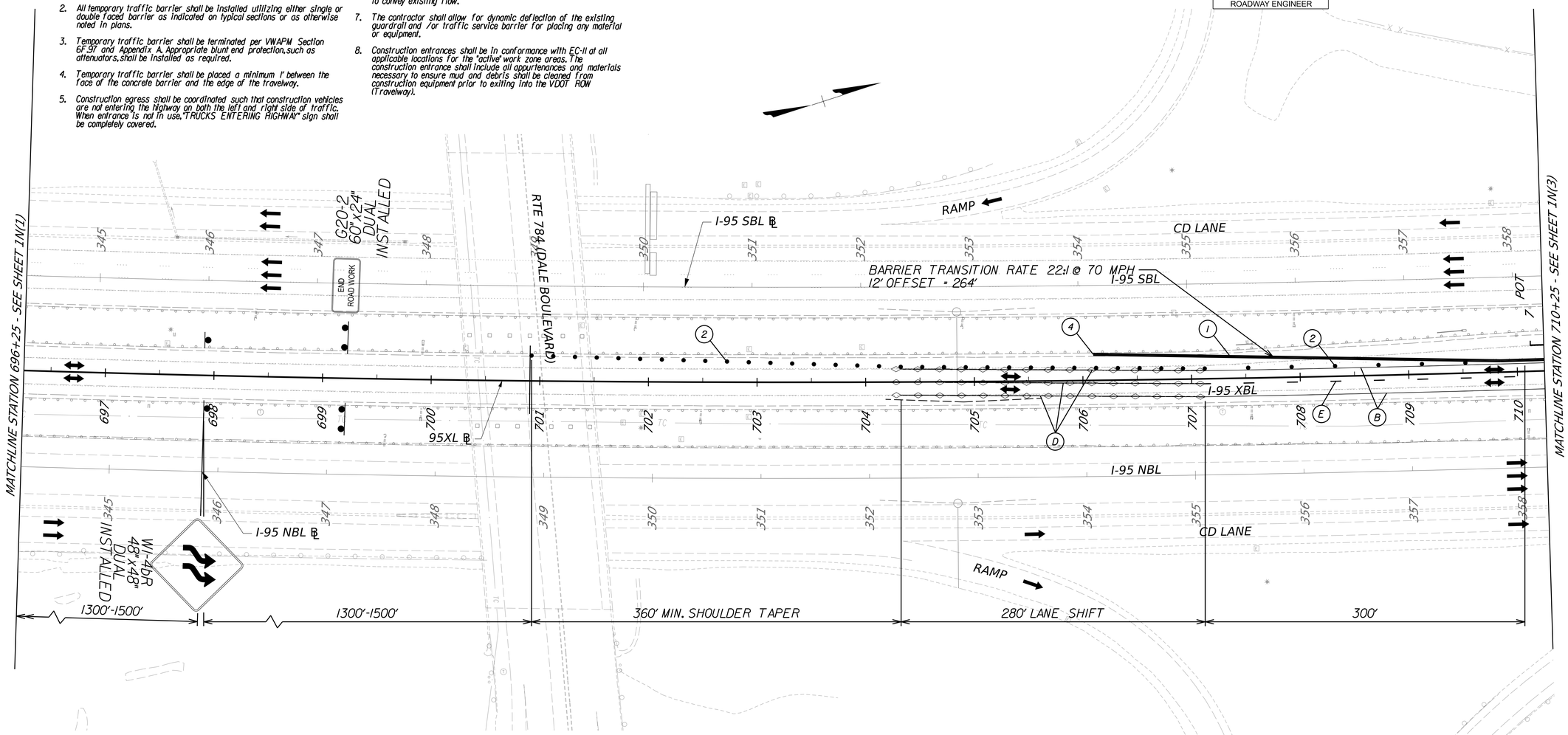

LEGEND

- CONSTRUCTION THIS STAGE
- CONSTRUCTION PREVIOUS STAGE
- SHOULDER STRENGTHENING
- TEMPORARY PAVEMENT
- TRAFFIC DIRECTION

(1) TRAFFIC BARRIER SERVICE CONCRETE (TBSC)
(2) GROUP 2 CHANNELIZING DEVICES
(3) IMPACT ATTEN. SERVICE TY.I
(4) FIXED OBJECT ATTACHMENT (TEMPORARY)
(A) TYPE A, YELLOW TEMP. PVMT LINE MRKG, 6" WIDTH
(B) TYPE A, WHITE TEMP. PVMT LINE MRKG, 6" WIDTH
(C) TYPE A, YELLOW TEMP. PVMT LINE MRKG, 8" WIDTH
(D) TYPE A, WHITE TEMP. PVMT LINE MRKG, 8" WIDTH
(E) TYPE A, WHITE TEMP. PVMT LINE MRKG, 6" WIDTH (10' LINE, 30' SPACE)
(F) TYPE A, WHITE TEMP. PVMT LINE MRKG, 8" WIDTH
(G) TYPE A, WHITE TEMP. PVMT LINE MRKG, 6" WIDTH (2' LINE, 13' SPACE)
(H) TEMPORARY STOP LINE
◁ ONE-WAY TEMPORARY PAVEMENT MARKERS
◇ TWO-WAY TEMPORARY PAVEMENT MARKERS
TYPE III BARRICADE

SCALE 0 50' 100'

AFC PLANS

	PROJECT	SHEET NO.
	0095-076-299	IN(2)

7/11/2022 4589300100IN(3).DGN
8:56:44 AM Plotted By: jlopez-ornelas

LIMITED ACCESS HIGHWAY By Resolution of the Highway Commission dated October 4, 1956.
By Resolution of the Highway Commission dated January 18, 1973.
By Resolution of the Commonwealth Transportation Board dated April 19, 2022

PROJECT MANAGER
SURVEYED BY, DATE
DESIGN BY
SUBSURFACE UTILITY BY, DATE

TEMPORARY TRAFFIC CONTROL PLANS
STAGE 2A

COMMONWEALTH OF VIRGINIA
MITCHELL F. JOHNSON
Lic. No. 023838
PROFESSIONAL ENGINEER

Mitchell F Johnson
2022.07.13 19:22:53 -04'00'
Whitman, Requardt & Associates
Richmond, Virginia
ROADWAY ENGINEER

REVISED	STATE	STATE ROUTE	STATE PROJECT	SHEET NO.
	VA.	95	0095-076-299,C-501	IN(3)

DESIGN FEATURES RELATING TO CONSTRUCTION OR TO REGULATION AND CONTROL OF TRAFFIC MAY BE SUBJECT TO CHANGE AS DEEMED NECESSARY BY THE DEPARTMENT

NOTES:

1. Group 2 channelizing devices shall be installed per Table 6F-2 of the Virginia Work Area Protection Manual.
2. All temporary traffic barrier shall be installed utilizing either single or double faced barrier as indicated on typical sections or as otherwise noted in plans.
3. Temporary traffic barrier shall be terminated per VWAPM Section 6F.91 and Appendix A. Appropriate blunt end protection, such as attenuators, shall be installed as required.
4. Temporary traffic barrier shall be placed a minimum 1' between the face of the concrete barrier and the edge of the travelway.
5. Construction egress shall be coordinated such that construction vehicles are not entering the highway on both the left and right side of traffic. When entrance is not in use, "TRUCKS ENTERING HIGHWAY" sign shall be completely covered.
6. Existing drainage shall be maintained within the staging areas. If existing ditches are to be filled, temporary pipes shall be designed to convey existing flow.
7. The contractor shall allow for dynamic deflection of the existing guardrail and /or traffic service barrier for placing any material or equipment.
8. Construction entrances shall be in conformance with EC-II at all applicable locations for the 'active' work zone areas. The construction entrance shall include all appurtenances and materials necessary to ensure mud and debris shall be cleared from construction equipment prior to exiting into the VDOT ROW (Travelway).

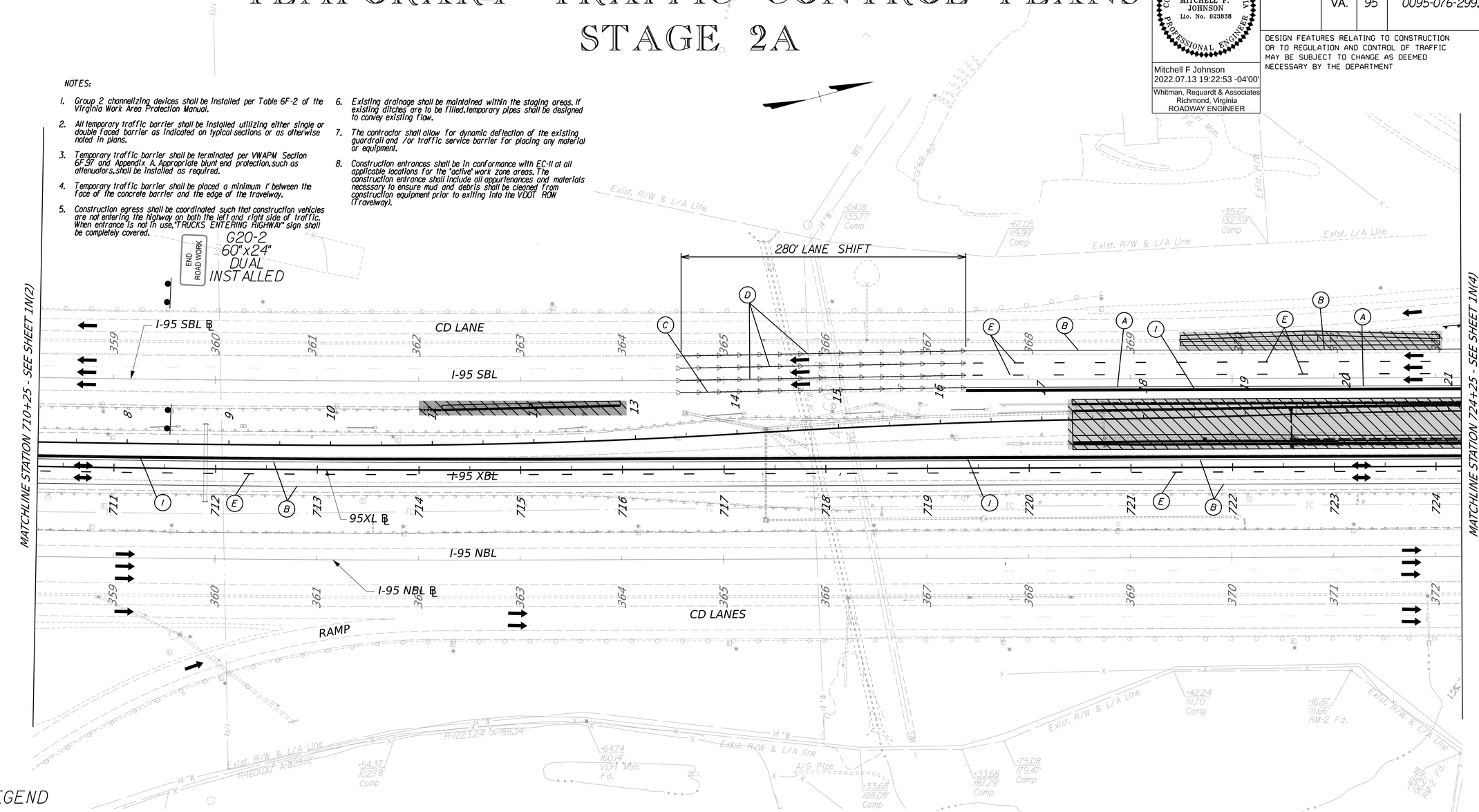

LEGEND

- CONSTRUCTION THIS STAGE
- CONSTRUCTION PREVIOUS STAGE
- SHOULDER STRENGTHENING
- TEMPORARY PAVEMENT
- TRAFFIC DIRECTION

(1) TRAFFIC BARRIER SERVICE CONCRETE (TBSC)
(2) GROUP 2 CHANNELIZING DEVICES
(3) IMPACT ATTEN. SERVICE TY. I
(4) FIXED OBJECT ATTACHMENT (TEMPORARY)
(A) TYPE A, YELLOW TEMP. PVMT LINE MRKG, 6" WIDTH
(B) TYPE A, WHITE TEMP. PVMT LINE MRKG, 6" WIDTH
(C) TYPE A, YELLOW TEMP. PVMT LINE MRKG, 8" WIDTH
(D) TYPE A, WHITE TEMP. PVMT LINE MRKG, 8" WIDTH
(E) TYPE A, WHITE TEMP. PVMT LINE MRKG, 6" WIDTH (10' LINE, 30' SPACE)
(F) TYPE A, WHITE TEMP. PVMT LINE MRKG, 8" WIDTH
(G) TYPE A, WHITE TEMP. PVMT LINE MRKG, 6" WIDTH (2' LINE, 13' SPACE)
(H) TEMPORARY STOP LINE
◁ ONE-WAY TEMPORARY PAVEMENT MARKERS
◇ TWO-WAY TEMPORARY PAVEMENT MARKERS
TYPE III BARRICADE

SCALE 0 50' 100'

AFC PLANS

PROJECT	SHEET NO.
0095-076-299	IN(3)

Cell Revised 12/11/12

7/11/2022 4589300100204(4).DGN
9:05:07 AM Plotted By: Jlopez-ornelas

LIMITED ACCESS HIGHWAY

By Resolution of the Highway Commission dated October 4, 1956.
By Resolution of the Highway Commission dated January 18, 1973.
By Resolution of the Commonwealth Transportation Board dated April 19, 2022

PROJECT MANAGER Rimpal Shah, P.E. (703) 259-2362 (NOVA District) _____
SURVEYED BY, DATE B&B Surveying and Mapping, LLC (804) 330-3781, 03/09/2021
DESIGN BY Whitman, Requardt, & Associates, LLP (804) 212-8700 _____.
SUBSURFACE UTILITY BY, DATE Accumark, Inc. (804) 550-2740, 07/07/2021

TYPICAL SECTIONS

COMMONWEALTH OF VIRGINIA — JEFFREY S. BASFORD — Lic. No. 043143 — PROFESSIONAL ENGINEER

Jeffrey S Basford
2022.07.15 15:58:30 -04'00'
Whitman, Requardt & Associates
Baltimore, Maryland
MATERIALS ENGINEER

COMMONWEALTH OF VIRGINIA — MITCHELL F. JOHNSON — Lic. No. 023838 — PROFESSIONAL ENGINEER

Mitchell F Johnson
2022.07.13 19:40:14 -04'00'
Whitman, Requardt & Associates
Richmond, Virginia
ROADWAY ENGINEER

REVISED	STATE	STATE ROUTE	STATE PROJECT	SHEET NO.
	VA.	95	0095-076-299,C-501	2A(4)

DESIGN FEATURES RELATING TO CONSTRUCTION OR TO REGULATION AND CONTROL OF TRAFFIC MAY BE SUBJECT TO CHANGE AS DEEMED NECESSARY BY THE DEPARTMENT

* SEE SHEET 2B(2-3) FOR GORE DETAILS

** SEE SHEET 5A FOR SHOULDER TRANSITION

RAMP DBSR

STA. 26+87.50 TO STA. 33+58.97

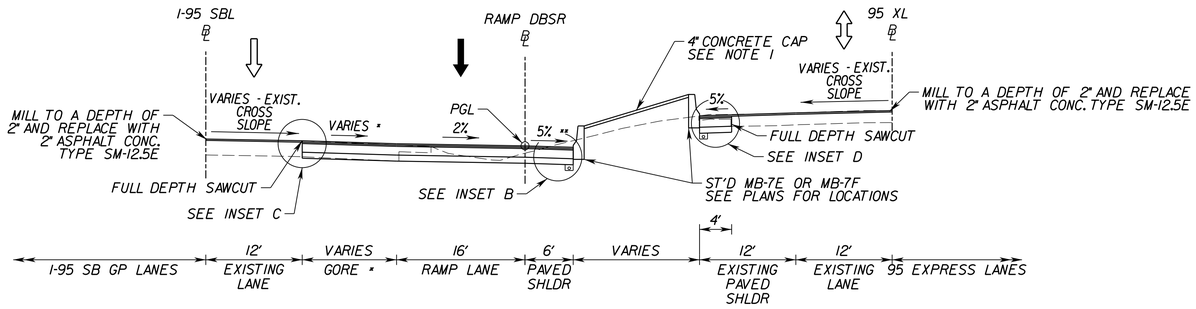

* SEE SHEET 2B(2-3) FOR GORE DETAILS

RAMP DBSR

STA. 33+58.97 TO STA. 34+00.18

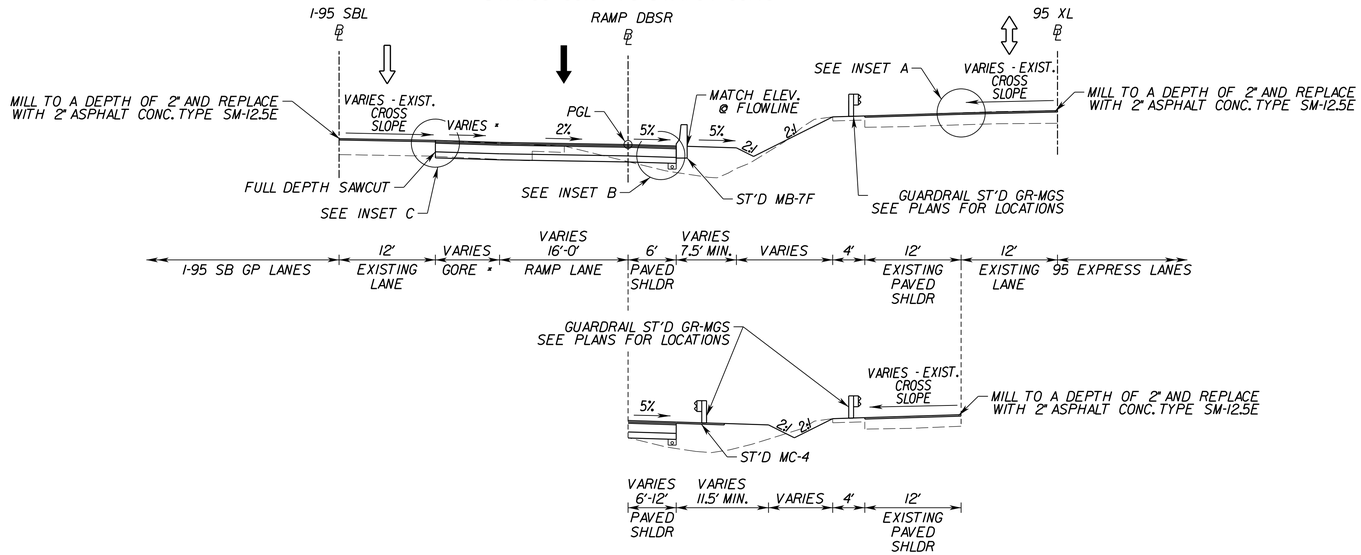

STA. 34+00.18 TO STA. 44+10.49

INSET A

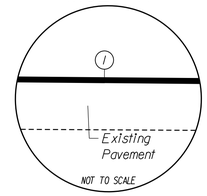

INSET B

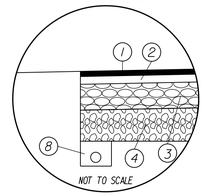

INSET C

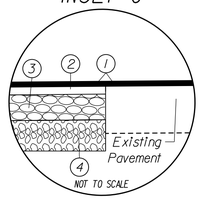

INSET D

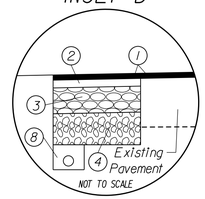

Pavement Legend

1. Asphalt Concrete Surface Course, Type SM-12.5E - 2 Inch Depth
2. Asphalt Concrete Intermediate Course, Type 19.0D - 2 Inch Depth
3. Asphalt Concrete Base Course, Type BM-25.0A - 11 Inch Depth
4. Aggregate Base Material, Type I, Size No. 21 B - 15 Inch Depth
5. Asphalt Concrete Surface Course, Type SM-9.5D - 2 Inch Depth
6. Asphalt Concrete Base Course, Type BM-25.0A - 8 Inch Depth
7. Aggregate Base Material, Type I, Size No. 21 B - 6 Inch Depth (For Opitz Blvd. widening on the high side of exist. pavement, 6" 21B will be replaced with 6" CTA base. In accordance with VDOT Special Provision for cement treated aggregate (CTA base.
8. ST'D UD-4 Underdrain
9. Aggregate Base Material, Type I, Size No. 21 B - 4 Inch Depth
10. Hydraulic Cement Conc. Sidewalk, Class A3 - 4 Inch Depth
11. Asphalt Concrete Intermediate Course, Type 19.0A - 2 Inch Depth

NOTES:
1. MEDIAN BARRIER SHALL BE ST'D MB-7E WHERE DISTANCE BETWEEN BACK OF BARRIERS IS LESS THAN OR EQUAL TO 8'. MEDIAN BARRIER SHALL BE ST'D MB-7F WHERE DISTANCE BETWEEN BACK OF BARRIERS IS GREATER THAN 8', AND WILL HAVE 4" CONCRETE CAP (2% MIN SLOPE, 50% MAX SLOPE). AREA BETWEEN BARRIERS SHALL BE BACKFILLED WITH COARSE AGGREGATE BACKFILL PER ST'D MB-7E AND GRADED TO DRAIN. CAP SHALL INCLUDE * 5X8" DOWELLS @ 30" C-C PER ST'D MB-7E.
2. PAVEMENT WIDENING SHALL BE IN ACCORDANCE WITH VDOT STANDARD WP-2.
3. EXISTING UD-4 WITHIN WIDENING AREA SHALL BE DEMOLISHED AND REPLACED.

AFC PLANS

NOT TO SCALE	PROJECT 0095-076-299	SHEET NO. 2A(4)

Call Revised 12/11/12

LIMITED ACCESS HIGHWAY

By Resolution of the Highway Commission dated October 4, 1956
By Resolution of the Highway Commission dated January 18, 1973
By Resolution of the Commonwealth Transportation Board dated April 19, 2022

PROJECT MANAGER
SURVEYED BY, DATE
DESIGN BY
SUBSURFACE UTILITY BY, DATE

TEMPORARY TRAFFIC CONTROL PLANS
STAGE 2A

COMMONWEALTH OF VIRGINIA
MITCHELL F. JOHNSON
Lic. No. 023838
PROFESSIONAL ENGINEER

Mitchell F Johnson
2022.07.13 19:28:56 -04'00'
Whitman, Requardt & Associates
Richmond, Virginia
ROADWAY ENGINEER

REVISED	STATE	STATE ROUTE	STATE PROJECT	SHEET NO.
	VA.	95	0095-076-299,C-501	IN(5)

DESIGN FEATURES RELATING TO CONSTRUCTION OR TO REGULATION AND CONTROL OF TRAFFIC MAY BE SUBJECT TO CHANGE AS DEEMED NECESSARY BY THE DEPARTMENT

NOTES:

1. *Group 2 channelizing devices shall be installed per Table 6F-2 of the Virginia Work Area Protection Manual.*
2. *All temporary traffic barrier shall be installed utilizing either single or double faced barrier as indicated on typical sections or as otherwise noted in plans.*
3. *Temporary traffic barrier shall be terminated per VWAPM Section 6F.97 and Appendix A. Appropriate blunt end protection,such as attenuators,shall be installed as required.*
4. *Temporary traffic barrier shall be placed a minimum 1' between the face of the concrete barrier and the edge of the travelway.*
5. *Construction egress shall be coordinated such that construction vehicles are not entering the highway on both the left and right side of traffic. When entrance is not in use,"TRUCKS ENTERING HIGHWAY" sign shall be completely covered.*
6. *Existing drainage shall be maintained within the staging areas. If existing ditches are to be filled,temporary pipes shall be designed to convey existing flow.*
7. *The contractor shall allow for dynamic deflection of the existing guardrail and /or traffic service barrier for placing any material or equipment.*
8. *Construction entrances shall be in conformance with EC-II at all applicable locations for the "active" work zone areas. The construction entrance shall include all appurtenances and materials necessary to ensure mud and debris shall be cleaned from construction equipment prior to exiting into the VDOT ROW (Travelway).*

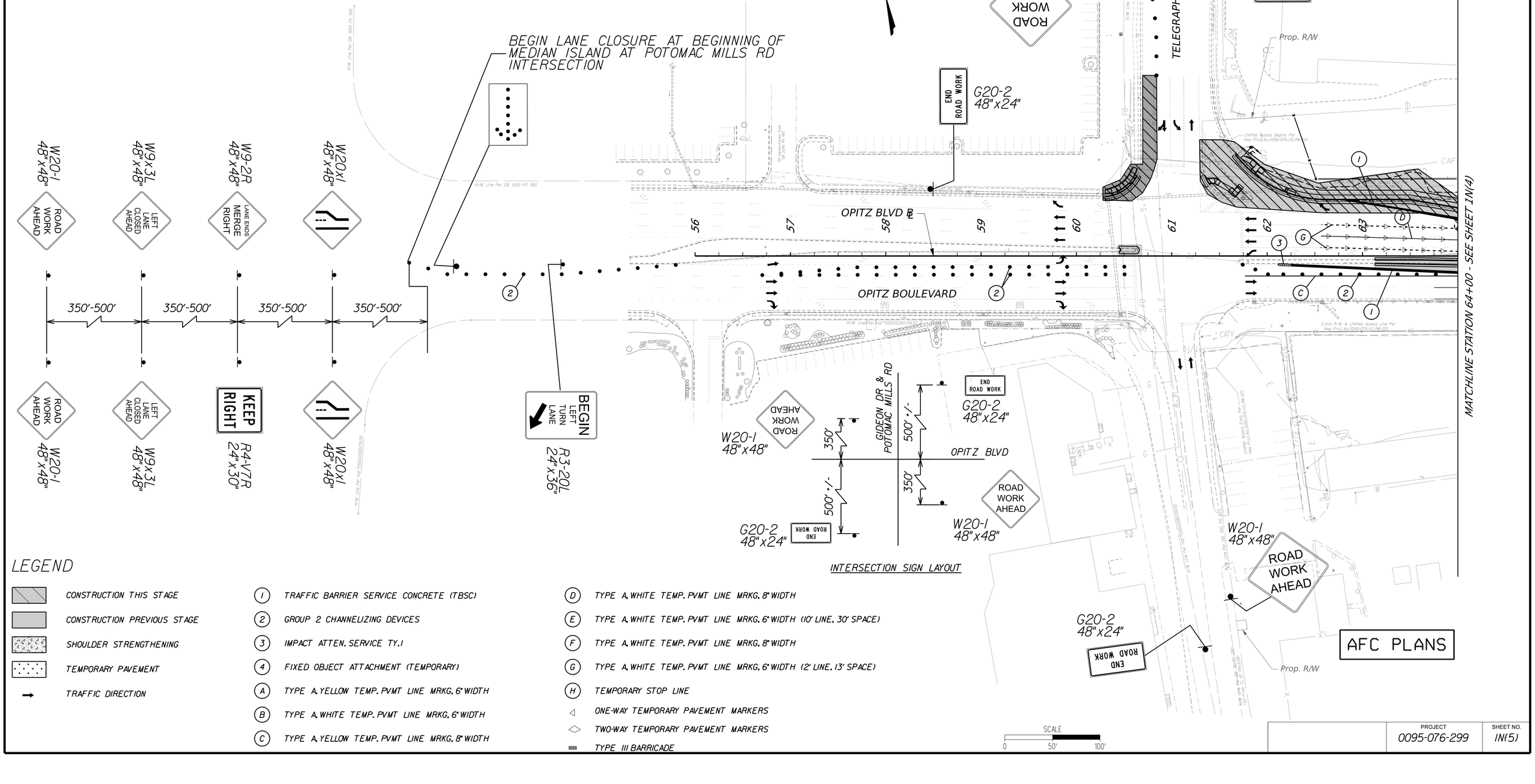

INTERSECTION SIGN LAYOUT

LEGEND

- CONSTRUCTION THIS STAGE
- CONSTRUCTION PREVIOUS STAGE
- SHOULDER STRENGTHENING
- TEMPORARY PAVEMENT
- TRAFFIC DIRECTION

(1) TRAFFIC BARRIER SERVICE CONCRETE (TBSC)
(2) GROUP 2 CHANNELIZING DEVICES
(3) IMPACT ATTEN. SERVICE TY.I
(4) FIXED OBJECT ATTACHMENT (TEMPORARY)
(A) TYPE A, YELLOW TEMP. PVMT LINE MRKG, 6" WIDTH
(B) TYPE A, WHITE TEMP. PVMT LINE MRKG, 6" WIDTH
(C) TYPE A, YELLOW TEMP. PVMT LINE MRKG, 8" WIDTH
(D) TYPE A, WHITE TEMP. PVMT LINE MRKG, 8" WIDTH
(E) TYPE A, WHITE TEMP. PVMT LINE MRKG, 6" WIDTH (10' LINE, 30' SPACE)
(F) TYPE A, WHITE TEMP. PVMT LINE MRKG, 8" WIDTH
(G) TYPE A, WHITE TEMP. PVMT LINE MRKG, 6" WIDTH (2' LINE, 13' SPACE)
(H) TEMPORARY STOP LINE
◁ ONE-WAY TEMPORARY PAVEMENT MARKERS
◇ TWO-WAY TEMPORARY PAVEMENT MARKERS
TYPE III BARRICADE

SCALE 0 50' 100'

PROJECT	SHEET NO.
0095-076-299	IN(5)

7/11/2022 4589300100IN(6).DGN
8:58:17 AM Plotted By: jlopez-ornelas

LIMITED ACCESS HIGHWAY

By Resolution of the Highway Commission dated October 4, 1956.
By Resolution of the Highway Commission dated January 18, 1973.
By Resolution of the Commonwealth Transportation Board dated April 19, 2022

PROJECT MANAGER
SURVEYED BY, DATE
DESIGN BY
SUBSURFACE UTILITY BY, DATE

TEMPORARY TRAFFIC CONTROL PLANS

STAGE 2A

COMMONWEALTH OF VIRGINIA
MITCHELL F. JOHNSON
Lic. No. 023838
PROFESSIONAL ENGINEER

Mitchell F Johnson
2022.07.13 19:29:51 -04'00'
Whitman, Requardt & Associates
Richmond, Virginia
ROADWAY ENGINEER

REVISED	STATE	STATE ROUTE	STATE PROJECT	SHEET NO.
	VA.	95	0095-076-299,C-501	IN(6)

DESIGN FEATURES RELATING TO CONSTRUCTION OR TO REGULATION AND CONTROL OF TRAFFIC MAY BE SUBJECT TO CHANGE AS DEEMED NECESSARY BY THE DEPARTMENT

NOTES:

1. *Group 2 channelizing devices shall be installed per Table 6F-2 of the Virginia Work Area Protection Manual.*
2. *All temporary traffic barrier shall be installed utilizing either single or double faced barrier as indicated on typical sections or as otherwise noted in plans.*
3. *Temporary traffic barrier shall be terminated per VWAPM Section 6F.97 and Appendix A. Appropriate blunt end protection,such as attenuators,shall be installed as required.*
4. *Temporary traffic barrier shall be placed a minimum 1' between the face of the concrete barrier and the edge of the travelway.*
5. *Construction egress shall be coordinated such that construction vehicles are not entering the highway on both the left and right side of traffic. When entrance is not in use,"TRUCKS ENTERING HIGHWAY" sign shall be completely covered.*
6. *Existing drainage shall be maintained within the staging areas. If existing ditches are to be filled,temporary pipes shall be designed to convey existing flow.*
7. *The contractor shall allow for dynamic deflection of the existing guardrail and /or traffic service barrier for placing any material or equipment.*
8. *Construction entrances shall be in conformance with EC-11 at all applicable locations for the "active" work zone areas. The construction entrance shall include all appurtenances and materials necessary to ensure mud and debris shall be cleaned from construction equipment prior to exiting into the VDOT ROW (Travelway).*

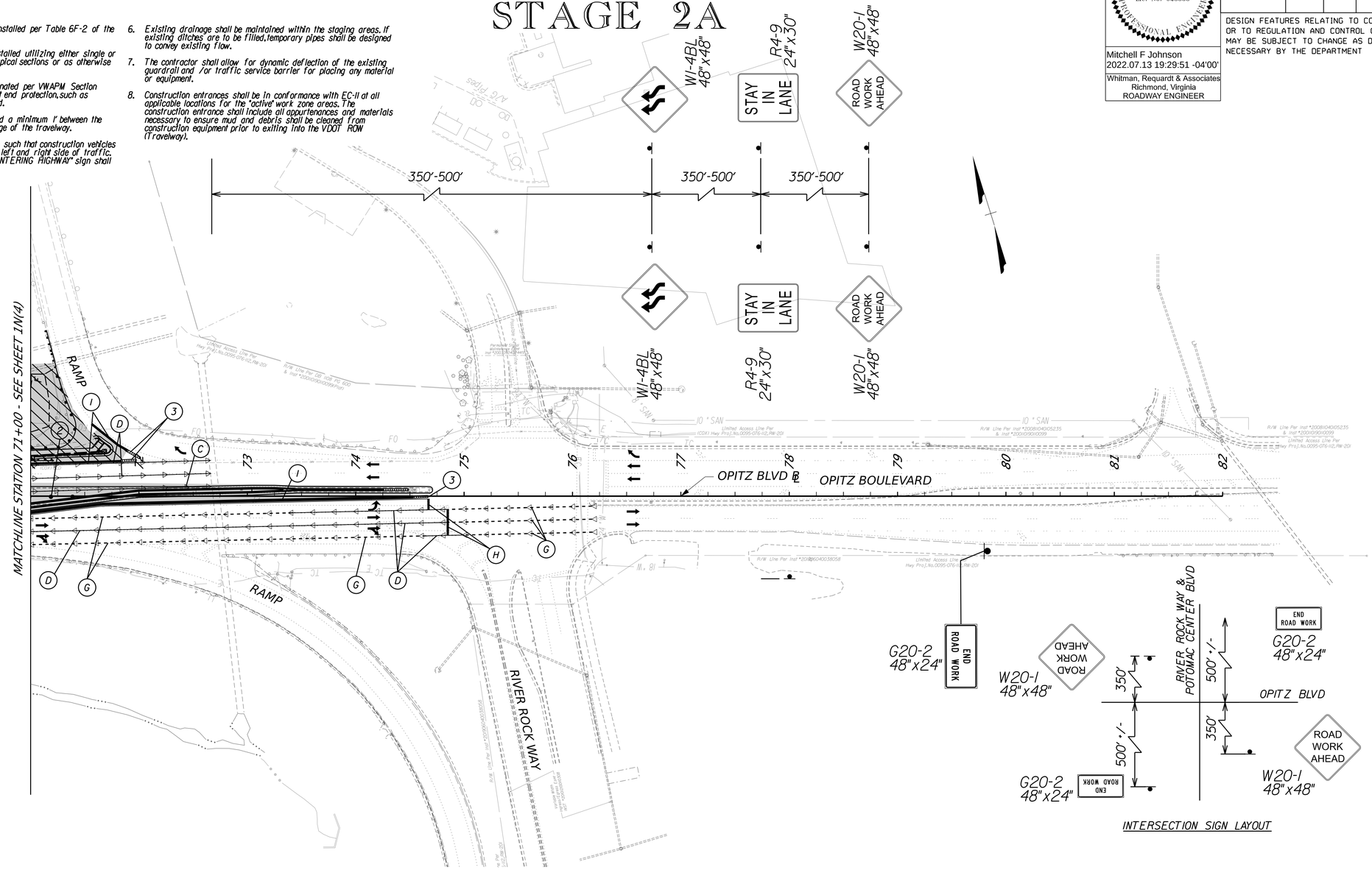

INTERSECTION SIGN LAYOUT

LEGEND

- CONSTRUCTION THIS STAGE
- CONSTRUCTION PREVIOUS STAGE
- SHOULDER STRENGTHENING
- TEMPORARY PAVEMENT
- TRAFFIC DIRECTION

(1) TRAFFIC BARRIER SERVICE CONCRETE (TBSC)
(2) GROUP 2 CHANNELIZING DEVICES
(3) IMPACT ATTEN. SERVICE TY.I
(4) FIXED OBJECT ATTACHMENT (TEMPORARY)
(A) TYPE A, YELLOW TEMP. PVMT LINE MRKG, 6" WIDTH
(B) TYPE A, WHITE TEMP. PVMT LINE MRKG, 6" WIDTH
(C) TYPE A, YELLOW TEMP. PVMT LINE MRKG, 8" WIDTH
(D) TYPE A, WHITE TEMP. PVMT LINE MRKG, 8" WIDTH
(E) TYPE A, WHITE TEMP. PVMT LINE MRKG, 6" WIDTH (10' LINE, 30' SPACE)
(F) TYPE A, WHITE TEMP. PVMT LINE MRKG, 8" WIDTH
(G) TYPE A, WHITE TEMP. PVMT LINE MRKG, 6" WIDTH (2' LINE, 13' SPACE)
(H) TEMPORARY STOP LINE

- ONE-WAY TEMPORARY PAVEMENT MARKERS
- TWO-WAY TEMPORARY PAVEMENT MARKERS
- TYPE III BARRICADE

SCALE
0 50' 100'

AFC PLANS

PROJECT	SHEET NO.
0095-076-299	IN(6)

Cell Revised 12/11/12

7/11/2022 4589300100IN(7).DGN
8:59:02 AM Plotted By: jlopez-ornelas

LIMITED ACCESS HIGHWAY By Resolution of the Highway Commission dated October 4, 1956.
By Resolution of the Highway Commission dated January 18, 1973.
By Resolution of the Commonwealth Transportation Board dated April 19, 2022

PROJECT MANAGER
SURVEYED BY, DATE
DESIGN BY
SUBSURFACE UTILITY BY, DATE

TEMPORARY TRAFFIC CONTROL PLANS
STAGE 2A

COMMONWEALTH OF VIRGINIA
MITCHELL F. JOHNSON
Lic. No. 023838
PROFESSIONAL ENGINEER

Mitchell F Johnson
2022.07.13 19:30:14 -04'00'

Whitman, Requardt & Associates
Richmond, Virginia
ROADWAY ENGINEER

REVISED	STATE	STATE ROUTE	STATE PROJECT	SHEET NO.
	VA.	95	0095-076-299,C-501	IN(7)

DESIGN FEATURES RELATING TO CONSTRUCTION OR TO REGULATION AND CONTROL OF TRAFFIC MAY BE SUBJECT TO CHANGE AS DEEMED NECESSARY BY THE DEPARTMENT

NOTES:

1. Group 2 channelizing devices shall be installed per Table 6F-2 of the Virginia Work Area Protection Manual.
2. All temporary traffic barrier shall be installed utilizing either single or double faced barrier as indicated on typical sections or as otherwise noted in plans.
3. Temporary traffic barrier shall be terminated per VWAPM Section 6F.97 and Appendix A. Appropriate blunt end protection, such as attenuators, shall be installed as required.
4. Temporary traffic barrier shall be placed a minimum 1' between the face of the concrete barrier and the edge of the travelway.
5. Construction egress shall be coordinated such that construction vehicles are not entering the highway on both the left and right side of traffic. When entrance is not in use, "TRUCKS ENTERING HIGHWAY" sign shall be completely covered.
6. Existing drainage shall be maintained within the staging areas. If existing ditches are to be filled, temporary pipes shall be designed to convey existing flow.
7. The contractor shall allow for dynamic deflection of the existing guardrail and /or traffic service barrier for placing any material or equipment.
8. Construction entrances shall be in conformance with EC-11 at all applicable locations for the "active" work zone areas. The construction entrance shall include all appurtenances and materials necessary to ensure mud and debris shall be cleaned from construction equipment prior to exiting into the VDOT ROW (Travelway).

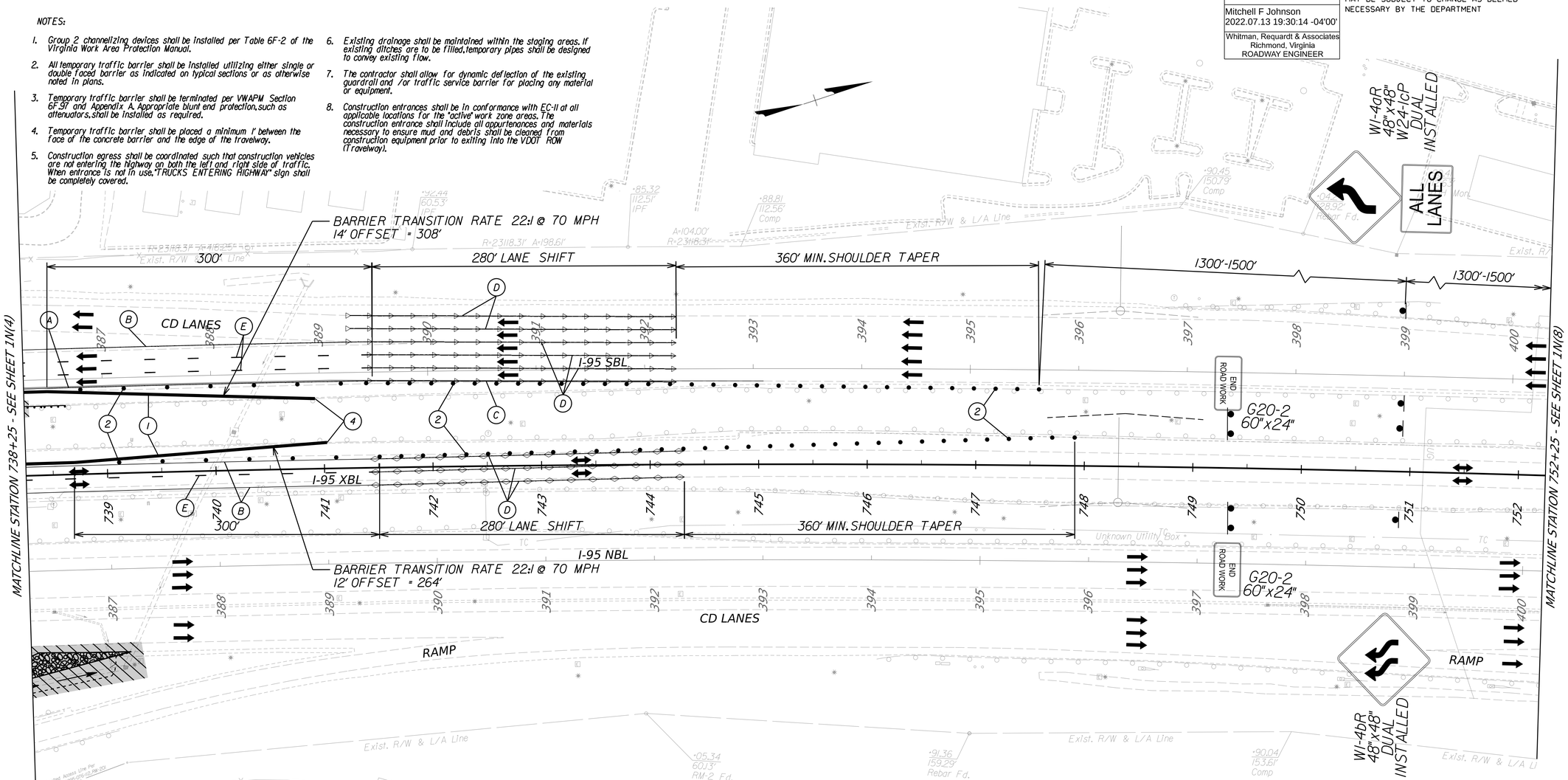

LEGEND

- CONSTRUCTION THIS STAGE
- CONSTRUCTION PREVIOUS STAGE
- SHOULDER STRENGTHENING
- TEMPORARY PAVEMENT
- TRAFFIC DIRECTION

(1) TRAFFIC BARRIER SERVICE CONCRETE (TBSC)
(2) GROUP 2 CHANNELIZING DEVICES
(3) IMPACT ATTEN. SERVICE TY.I
(4) FIXED OBJECT ATTACHMENT (TEMPORARY)
(A) TYPE A, YELLOW TEMP. PVMT LINE MRKG, 6" WIDTH
(B) TYPE A, WHITE TEMP. PVMT LINE MRKG, 6" WIDTH
(C) TYPE A, YELLOW TEMP. PVMT LINE MRKG, 8" WIDTH
(D) TYPE A, WHITE TEMP. PVMT LINE MRKG, 8" WIDTH
(E) TYPE A, WHITE TEMP. PVMT LINE MRKG, 6" WIDTH (10' LINE, 30' SPACE)
(F) TYPE A, WHITE TEMP. PVMT LINE MRKG, 8" WIDTH
(G) TYPE A, WHITE TEMP. PVMT LINE MRKG, 6" WIDTH (2' LINE, 13' SPACE)
(H) TEMPORARY STOP LINE
ONE-WAY TEMPORARY PAVEMENT MARKERS
TWO-WAY TEMPORARY PAVEMENT MARKERS
TYPE III BARRICADE

SCALE 0 50' 100'

AFC PLANS

PROJECT	SHEET NO.
0095-076-299	IN(7)

Cell Revised 12/11/12

7/11/2022 4589300100IN(8).DGN
8:59:32 AM Plotted By: jlopez-ornelas

LIMITED ACCESS HIGHWAY

By Resolution of the Highway Commission dated October 4, 1956.
By Resolution of the Highway Commission dated January 18, 1973.
By Resolution of the Commonwealth Transportation Board dated April 19, 2022

PROJECT MANAGER
SURVEYED BY, DATE
DESIGN BY
SUBSURFACE UTILITY BY, DATE

TEMPORARY TRAFFIC CONTROL PLANS
STAGE 2A

COMMONWEALTH OF VIRGINIA
MITCHELL F. JOHNSON
Lic. No. 023838
PROFESSIONAL ENGINEER

Mitchell F Johnson
2022.07.13 19:30:39 -04'00'

Whitman, Requardt & Associates
Richmond, Virginia
ROADWAY ENGINEER

REVISED	STATE	STATE ROUTE	STATE PROJECT	SHEET NO.
	VA.	95	0095-076-299,C-501	IN(8)

DESIGN FEATURES RELATING TO CONSTRUCTION OR TO REGULATION AND CONTROL OF TRAFFIC MAY BE SUBJECT TO CHANGE AS DEEMED NECESSARY BY THE DEPARTMENT

NOTES:

1. Group 2 channelizing devices shall be installed per Table 6F-2 of the Virginia Work Area Protection Manual.
2. All temporary traffic barrier shall be installed utilizing either single or double faced barrier as indicated on typical sections or as otherwise noted in plans.
3. Temporary traffic barrier shall be terminated per VWAPM Section 6F.97 and Appendix A. Appropriate blunt end protection, such as attenuators, shall be installed as required.
4. Temporary traffic barrier shall be placed a minimum 1' between the face of the concrete barrier and the edge of the travelway.
5. Construction egress shall be coordinated such that construction vehicles are not entering the highway on both the left and right side of traffic. When entrance is not in use, "TRUCKS ENTERING HIGHWAY" sign shall be completely covered.
6. Existing drainage shall be maintained within the staging areas. If existing ditches are to be filled, temporary pipes shall be designed to convey existing flow.
7. The contractor shall allow for dynamic deflection of the existing guardrail and /or traffic service barrier for placing any material or equipment.
8. Construction entrances shall be in conformance with EC-11 at all applicable locations for the "active" work zone areas. The construction entrance shall include all appurtenances and materials necessary to ensure mud and debris shall be cleaned from construction equipment prior to exiting into the VDOT ROW (Travelway).

PCMS #1 - PLACE ON OUTSIDE SHOULDER APPROX. 200' BEYOND EXIT 156B "FOOD" GUIDE SIGN. FIELD ENGINEER SHALL DECIDE FINAL LOCATION.

PCMS #2 - PLACE ON INSIDE SHOULDER DIRECTLY ACROSS FROM PCMS #1

THESE SIGNS SHALL BE IN PLACE WHEN RAMP DBSR IS OPENED TO TRAFFIC. THEY SHALL EACH DISPLAY MESSAGE #1 & #2 BELOW. THEY SHALL REMAIN OPERATIONAL FOR A MINIMUM OF TWO WEEKS AFTER THE OPENING OF RAMP DBSR.

NEW TRAF PATTERN AHEAD — MESSAGE #1

EXPRESS LNS LEFT EXIT — MESSAGE #2

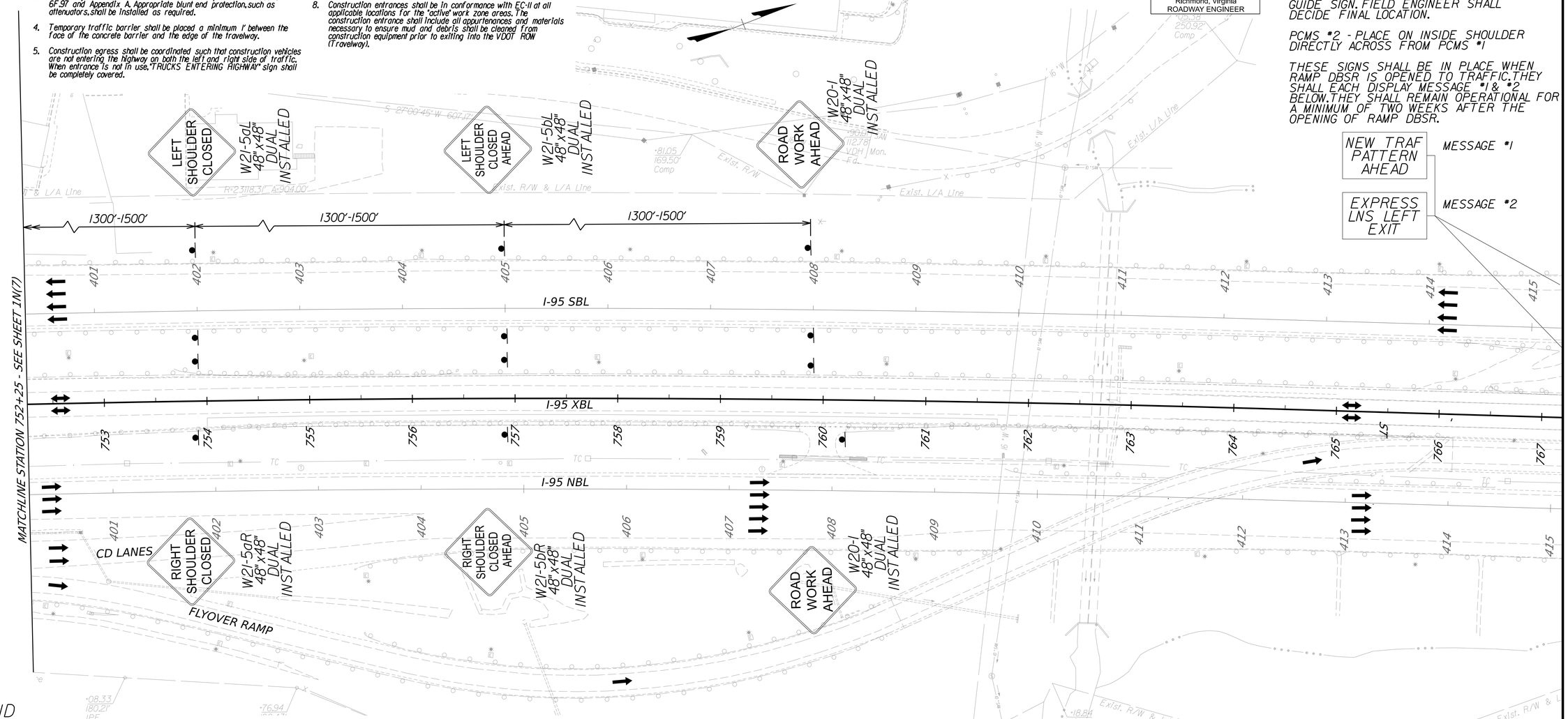

LEGEND

- CONSTRUCTION THIS STAGE
- CONSTRUCTION PREVIOUS STAGE
- SHOULDER STRENGTHENING
- TEMPORARY PAVEMENT
- TRAFFIC DIRECTION

(1) TRAFFIC BARRIER SERVICE CONCRETE (TBSC)
(2) GROUP 2 CHANNELIZING DEVICES
(3) IMPACT ATTEN. SERVICE TY.I
(4) FIXED OBJECT ATTACHMENT (TEMPORARY)
(A) TYPE A, YELLOW TEMP. PVMT LINE MRKG, 6" WIDTH
(B) TYPE A, WHITE TEMP. PVMT LINE MRKG, 6" WIDTH
(C) TYPE A, YELLOW TEMP. PVMT LINE MRKG, 8" WIDTH
(D) TYPE A, WHITE TEMP. PVMT LINE MRKG, 8" WIDTH
(E) TYPE A, WHITE TEMP. PVMT LINE MRKG, 6" WIDTH (10' LINE, 30' SPACE)
(F) TYPE A, WHITE TEMP. PVMT LINE MRKG, 8" WIDTH
(G) TYPE A, WHITE TEMP. PVMT LINE MRKG, 6" WIDTH (2' LINE, 13' SPACE)
(H) TEMPORARY STOP LINE
◁ ONE-WAY TEMPORARY PAVEMENT MARKERS
◇ TWO-WAY TEMPORARY PAVEMENT MARKERS
▨ TYPE III BARRICADE

SCALE 0 50' 100'

AFC PLANS

PROJECT	SHEET NO.
0095-076-299	IN(8)

Cell Revised 12/11/12

7/11/2022 4589300100IP(1).DGN
9:00:06 AM Plotted By: jlopez-ornelas

LIMITED ACCESS HIGHWAY By Resolution of the Highway Commission dated October 4, 1956.
By Resolution of the Highway Commission dated January 18, 1973.
By Resolution of the Commonwealth Transportation Board dated April 19, 2022

PROJECT MANAGER
SURVEYED BY, DATE
DESIGN BY
SUBSURFACE UTILITY BY, DATE

TEMPORARY TRAFFIC CONTROL PLANS
STAGE 3

NOTES:

1. Group 2 channelizing devices shall be installed per Table 6F-2 of the Virginia Work Area Protection Manual.
2. All temporary traffic barrier shall be installed utilizing either single or double faced barrier as indicated on typical sections or as otherwise noted in plans.
3. Temporary traffic barrier shall be terminated per VWAPM Section 6F.97 and Appendix A. Appropriate blunt end protection,such as attenuators,shall be installed as required.
4. Temporary traffic barrier shall be placed a minimum 1' between the face of the concrete barrier and the edge of the travelway.
5. Construction egress shall be coordinated such that construction vehicles are not entering the highway on both the left and right side of traffic. When entrance is not in use,"TRUCKS ENTERING HIGHWAY" sign shall be completely covered.
6. Existing drainage shall be maintained within the staging areas. If existing ditches are to be filled,temporary pipes shall be designed to convey existing flow.
7. The contractor shall allow for dynamic deflection of the existing guardrail and /or traffic service barrier for placing any material or equipment.
8. Construction entrances shall be in conformance with EC-II at all applicable locations for the "active" work zone areas. The construction entrance shall include all appurtenances and materials necessary to ensure mud and debris shall be cleaned from construction equipment prior to exiting into the VDOT ROW (Travelway).

COMMONWEALTH OF VIRGINIA
MITCHELL F. JOHNSON
Lic. No. 023838
PROFESSIONAL ENGINEER

Mitchell F Johnson
2022.07.13 19:35:00 -04'00'
Whitman, Requardt & Associates
Richmond, Virginia
ROADWAY ENGINEER

REVISED	STATE	STATE ROUTE	STATE PROJECT	SHEET NO.
	VA.	95	0095-076-299,C-501	IP(1)

DESIGN FEATURES RELATING TO CONSTRUCTION OR TO REGULATION AND CONTROL OF TRAFFIC MAY BE SUBJECT TO CHANGE AS DEEMED NECESSARY BY THE DEPARTMENT

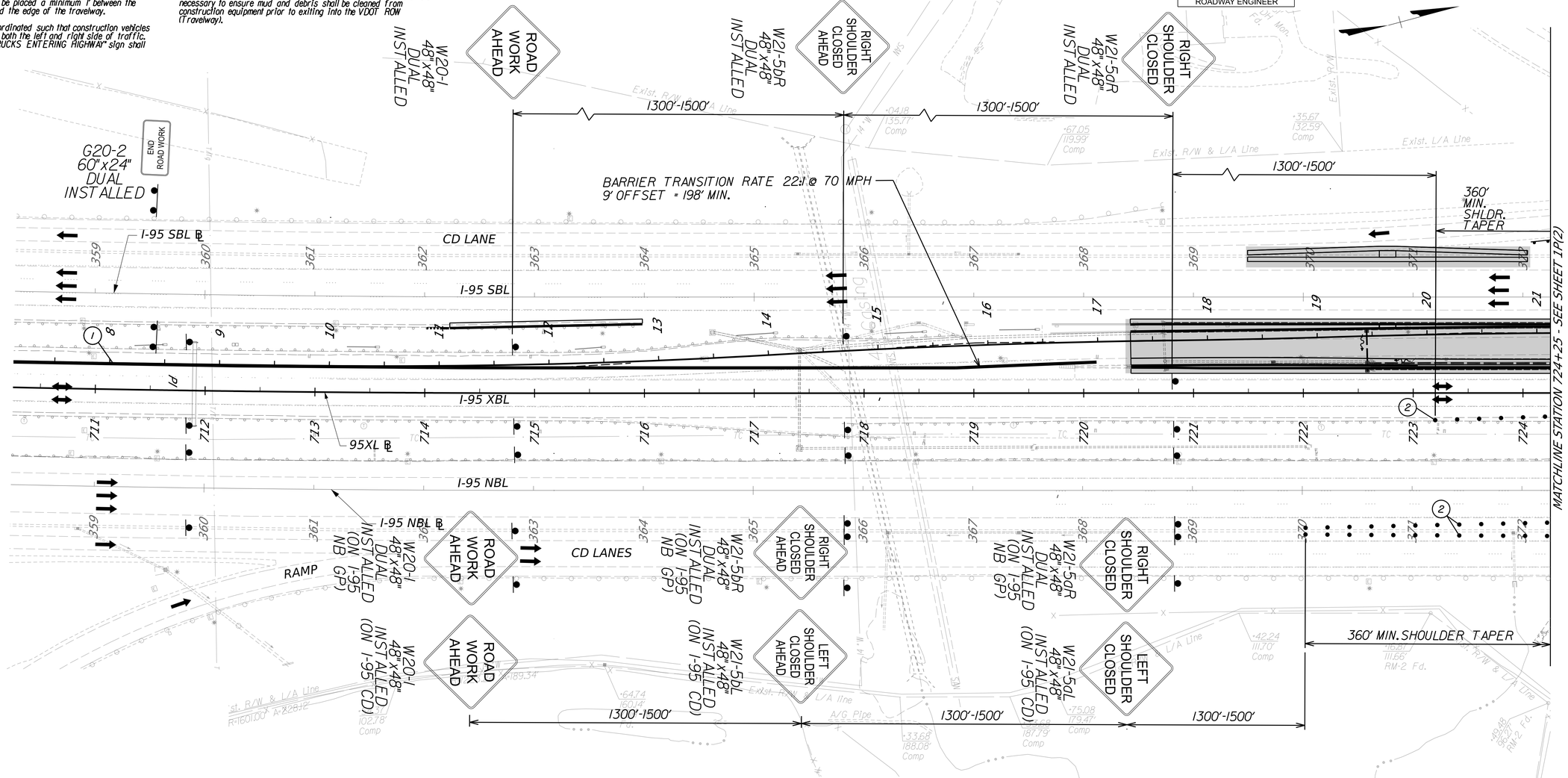

LEGEND

- CONSTRUCTION THIS STAGE
- CONSTRUCTION PREVIOUS STAGE
- SHOULDER STRENGTHENING
- TEMPORARY PAVEMENT
- TRAFFIC DIRECTION

(1) TRAFFIC BARRIER SERVICE CONCRETE (TBSC)
(2) GROUP 2 CHANNELIZING DEVICES
(3) IMPACT ATTEN. SERVICE TY.I
(4) FIXED OBJECT ATTACHMENT (TEMPORARY)
(A) TYPE A, YELLOW TEMP. PVMT LINE MRKG, 6" WIDTH
(B) TYPE A, WHITE TEMP. PVMT LINE MRKG, 6" WIDTH
(C) TYPE A, YELLOW TEMP. PVMT LINE MRKG, 8" WIDTH
(D) TYPE A, WHITE TEMP. PVMT LINE MRKG, 8" WIDTH
(E) TYPE A, WHITE TEMP. PVMT LINE MRKG, 6" WIDTH (10' LINE, 30' SPACE)
(F) TYPE A, WHITE TEMP. PVMT LINE MRKG, 8" WIDTH
(G) TYPE A, WHITE TEMP. PVMT LINE MRKG, 6" WIDTH (2' LINE, 13' SPACE)
(H) TEMPORARY STOP LINE
ONE-WAY TEMPORARY PAVEMENT MARKERS
TWO-WAY TEMPORARY PAVEMENT MARKERS
TYPE III BARRICADE

AFC PLANS

	PROJECT	SHEET NO.
	0095-076-299	IP(1)

Tail Revised 12/11/12

LIMITED ACCESS HIGHWAY

By Resolution of the Highway Commission dated October 4, 1956.
By Resolution of the Highway Commission dated January 18, 1973.
By Resolution of the Commonwealth Transportation Board dated April 19, 2022

PROJECT MANAGER
SURVEYED BY, DATE
DESIGN BY
SUBSURFACE UTILITY BY, DATE

TEMPORARY TRAFFIC CONTROL PLANS
STAGE 3

NOTES:

1. Group 2 channelizing devices shall be installed per Table 6F-2 of the Virginia Work Area Protection Manual.
2. All temporary traffic barrier shall be installed utilizing either single or double faced barrier as indicated on typical sections or as otherwise noted in plans.
3. Temporary traffic barrier shall be terminated per VWAPM Section 6F-97 and Appendix A. Appropriate blunt end protection,such as attenuators,shall be installed as required.
4. Temporary traffic barrier shall be placed a minimum 1' between the face of the concrete barrier and the edge of the travelway.
5. Construction egress shall be coordinated such that construction vehicles are not entering the highway on both the left and right side of traffic. When entrance is not in use,"TRUCKS ENTERING HIGHWAY" sign shall be completely covered.
6. Existing drainage shall be maintained within the staging areas. If existing ditches are to be filled,temporary pipes shall be designed to convey existing flow.
7. The contractor shall allow for dynamic deflection of the existing guardrail and /or traffic service barrier for placing any material or equipment.
8. Construction entrances shall be in conformance with EC-II at all applicable locations for the "active" work zone areas. The construction entrance shall include all appurtenances and materials necessary to ensure mud and debris shall be cleaned from construction equipment prior to exiting into the VDOT ROW (Travelway).

COMMONWEALTH OF VIRGINIA
MITCHELL F. JOHNSON
Lic. No. 023838
PROFESSIONAL ENGINEER

Mitchell F Johnson
2022.07.13 19:35:22 -04'00'

Whitman, Requardt & Associates
Richmond, Virginia
ROADWAY ENGINEER

REVISED	STATE	STATE ROUTE	STATE PROJECT	SHEET NO.
	VA.	95	0095-076-299,C-501	IP(2)

DESIGN FEATURES RELATING TO CONSTRUCTION OR TO REGULATION AND CONTROL OF TRAFFIC MAY BE SUBJECT TO CHANGE AS DEEMED NECESSARY BY THE DEPARTMENT

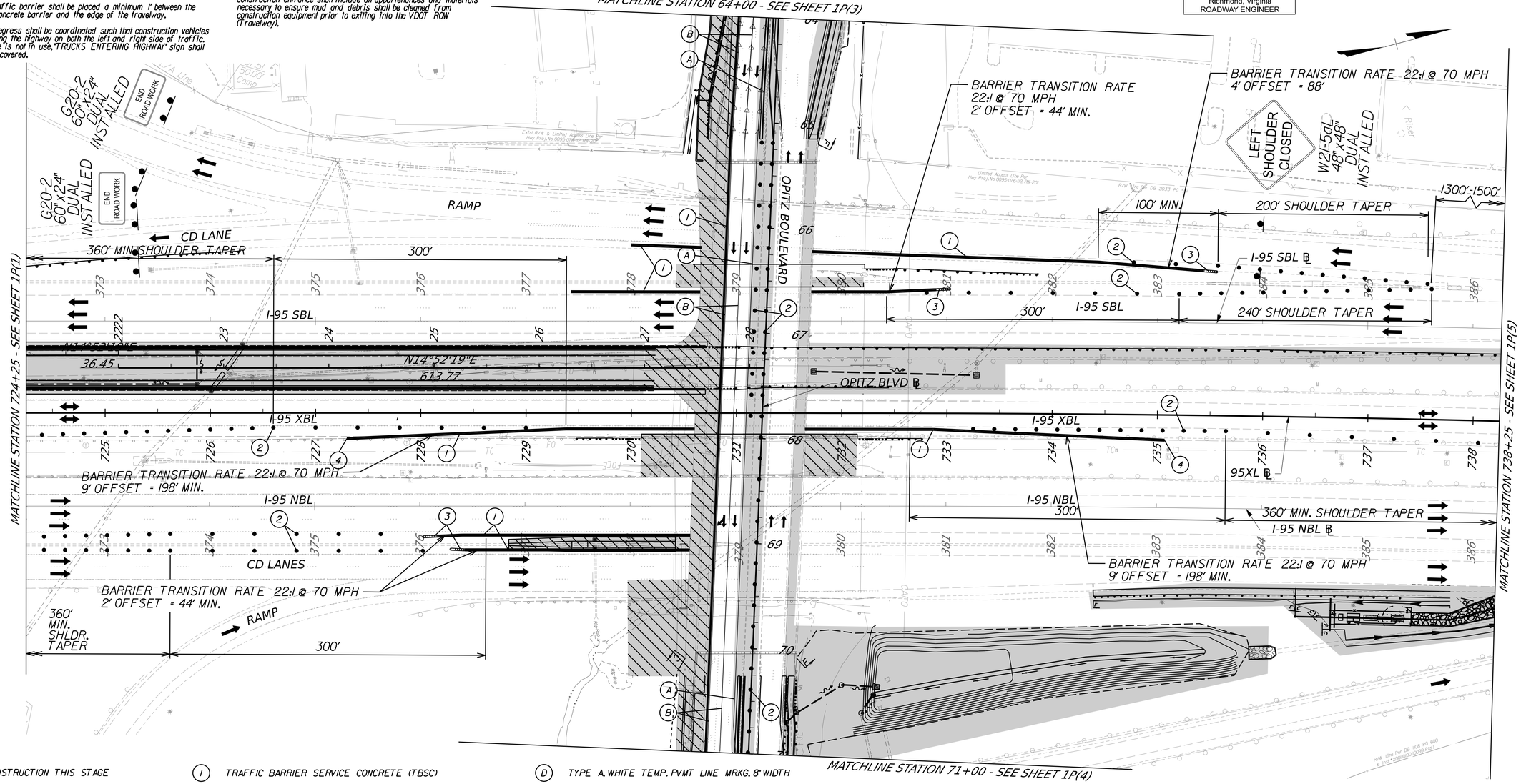

LEGEND

- CONSTRUCTION THIS STAGE
- CONSTRUCTION PREVIOUS STAGE
- SHOULDER STRENGTHENING
- TEMPORARY PAVEMENT
- TRAFFIC DIRECTION

(1) TRAFFIC BARRIER SERVICE CONCRETE (TBSC)
(2) GROUP 2 CHANNELIZING DEVICES
(3) IMPACT ATTEN. SERVICE TY.I
(4) FIXED OBJECT ATTACHMENT (TEMPORARY)
(A) TYPE A, YELLOW TEMP. PVMT LINE MRKG, 6" WIDTH
(B) TYPE A, WHITE TEMP. PVMT LINE MRKG, 6" WIDTH
(C) TYPE A, YELLOW TEMP. PVMT LINE MRKG, 8" WIDTH
(D) TYPE A, WHITE TEMP. PVMT LINE MRKG, 8" WIDTH
(E) TYPE A, WHITE TEMP. PVMT LINE MRKG, 6" WIDTH (10' LINE, 30' SPACE)
(F) TYPE A, WHITE TEMP. PVMT LINE MRKG, 8" WIDTH
(G) TYPE A, WHITE TEMP. PVMT LINE MRKG, 6" WIDTH (2' LINE, 13' SPACE)
(H) TEMPORARY STOP LINE
◁ ONE-WAY TEMPORARY PAVEMENT MARKERS
◇ TWO-WAY TEMPORARY PAVEMENT MARKERS
TYPE III BARRICADE

SCALE 0 50' 100'

AFC PLANS

PROJECT	SHEET NO.
0095-076-299	IP(2)

LIMITED ACCESS HIGHWAY

By Resolution of the Highway Commission dated October 4, 1956.
By Resolution of the Highway Commission dated January 18, 1973.
By Resolution of the Commonwealth Transportation Board dated April 19, 2022

PROJECT MANAGER _____
SURVEYED BY, DATE _____
DESIGN BY _____
SUBSURFACE UTILITY BY, DATE _____

TEMPORARY TRAFFIC CONTROL PLANS
STAGE 3

COMMONWEALTH OF VIRGINIA
MITCHELL F. JOHNSON
Lic. No. 023838
PROFESSIONAL ENGINEER

Mitchell F Johnson
2022.07.13 19:35:42 -04'00'
Whitman, Requardt & Associates
Richmond, Virginia
ROADWAY ENGINEER

REVISED	STATE	STATE ROUTE	STATE PROJECT	SHEET NO.
	VA.	95	0095-076-299,C-501	IP(3)

DESIGN FEATURES RELATING TO CONSTRUCTION OR TO REGULATION AND CONTROL OF TRAFFIC MAY BE SUBJECT TO CHANGE AS DEEMED NECESSARY BY THE DEPARTMENT

NOTES:

1. *Group 2 channelizing devices shall be installed per Table 6F-2 of the Virginia Work Area Protection Manual.*
2. *All temporary traffic barrier shall be installed utilizing either single or double faced barrier as indicated on typical sections or as otherwise noted in plans.*
3. *Temporary traffic barrier shall be terminated per VWAPM Section 6F.97 and Appendix A. Appropriate blunt end protection, such as attenuators, shall be installed as required.*
4. *Temporary traffic barrier shall be placed a minimum 1' between the face of the concrete barrier and the edge of the travelway.*
5. *Construction egress shall be coordinated such that construction vehicles are not entering the highway on both the left and right side of traffic. When entrance is not in use, "TRUCKS ENTERING HIGHWAY" sign shall be completely covered.*
6. *Existing drainage shall be maintained within the staging areas. If existing ditches are to be filled, temporary pipes shall be designed to convey existing flow.*
7. *The contractor shall allow for dynamic deflection of the existing guardrail and /or traffic service barrier for placing any material or equipment.*
8. *Construction entrances shall be in conformance with EC-II at all applicable locations for the "active" work zone areas. The construction entrance shall include all appurtenances and materials necessary to ensure mud and debris shall be cleaned from construction equipment prior to exiting into the VDOT ROW (Travelway).*

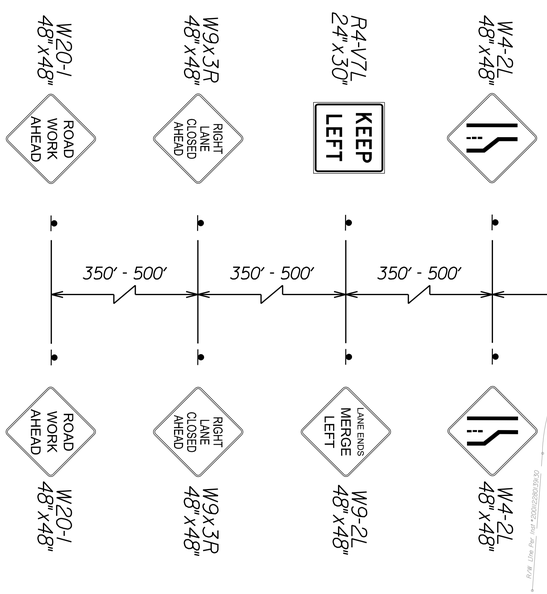

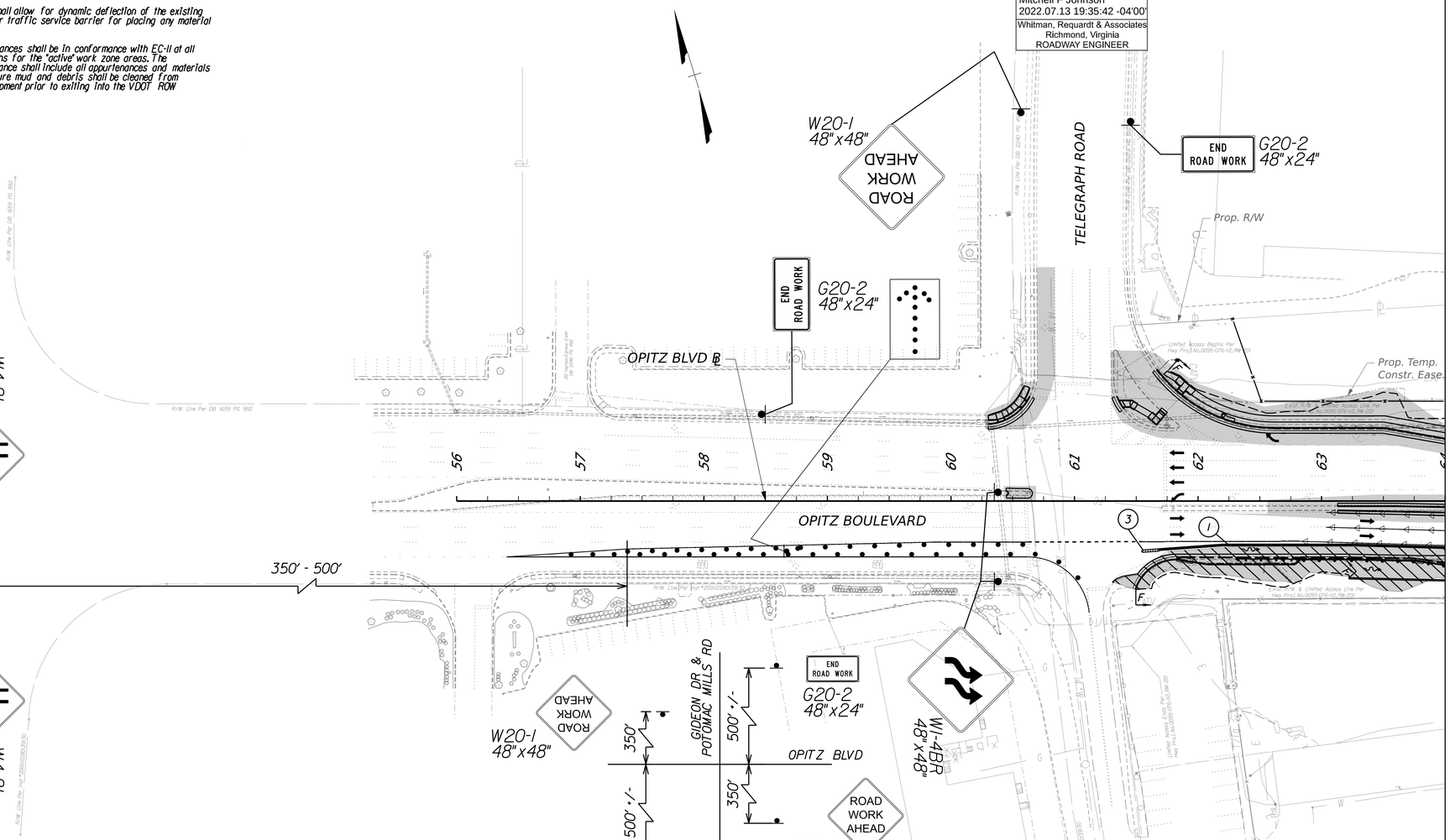

INTERSECTION SIGN LAYOUT

AFC PLANS

SCALE
0 50' 100'

LEGEND

- CONSTRUCTION THIS STAGE
- CONSTRUCTION PREVIOUS STAGE
- SHOULDER STRENGTHENING
- TEMPORARY PAVEMENT
- TRAFFIC DIRECTION

- (1) TRAFFIC BARRIER SERVICE CONCRETE (TBSC)
- (2) GROUP 2 CHANNELIZING DEVICES
- (3) IMPACT ATTEN. SERVICE TY.I
- (4) FIXED OBJECT ATTACHMENT (TEMPORARY)
- (A) TYPE A, YELLOW TEMP. PVMT LINE MRKG, 6" WIDTH
- (B) TYPE A, WHITE TEMP. PVMT LINE MRKG, 6" WIDTH
- (C) TYPE A, YELLOW TEMP. PVMT LINE MRKG, 8" WIDTH
- (D) TYPE A, WHITE TEMP. PVMT LINE MRKG, 8" WIDTH
- (E) TYPE A, WHITE TEMP. PVMT LINE MRKG, 6" WIDTH (10' LINE, 30' SPACE)
- (F) TYPE A, WHITE TEMP. PVMT LINE MRKG, 8" WIDTH
- (G) TYPE A, WHITE TEMP. PVMT LINE MRKG, 6" WIDTH (2' LINE, 13' SPACE)
- (H) TEMPORARY STOP LINE
- ONE-WAY TEMPORARY PAVEMENT MARKERS
- TWO-WAY TEMPORARY PAVEMENT MARKERS
- TYPE III BARRICADE

PROJECT	SHEET NO.
0095-076-299	IP(3)

LIMITED ACCESS HIGHWAY By Resolution of the Highway Commission dated October 4, 1956.
By Resolution of the Highway Commission dated January 18, 1973.
By Resolution of the Commonwealth Transportation Board dated April 19, 2022

PROJECT MANAGER _____
SURVEYED BY, DATE _____
DESIGN BY _____
SUBSURFACE UTILITY BY, DATE _____

TEMPORARY TRAFFIC CONTROL PLANS
STAGE 3

REVISED	STATE	STATE ROUTE	STATE PROJECT	SHEET NO.
	VA.	95	0095-076-299,C-501	IP(4)

COMMONWEALTH OF VIRGINIA
MITCHELL F. JOHNSON
Lic. No. 023838
PROFESSIONAL ENGINEER

Mitchell F Johnson
2022.07.13 19:36:10 -04'00'
Whitman, Requardt & Associates
Richmond, Virginia
ROADWAY ENGINEER

DESIGN FEATURES RELATING TO CONSTRUCTION OR TO REGULATION AND CONTROL OF TRAFFIC MAY BE SUBJECT TO CHANGE AS DEEMED NECESSARY BY THE DEPARTMENT

NOTES:

1. *Group 2 channelizing devices shall be installed per Table 6F-2 of the Virginia Work Area Protection Manual.*
2. *All temporary traffic barrier shall be installed utilizing either single or double faced barrier as indicated on typical sections or as otherwise noted in plans.*
3. *Temporary traffic barrier shall be terminated per VWAPM Section 6F.97 and Appendix A. Appropriate blunt end protection,such as attenuators,shall be installed as required.*
4. *Temporary traffic barrier shall be placed a minimum 1' between the face of the concrete barrier and the edge of the travelway.*
5. *Construction egress shall be coordinated such that construction vehicles are not entering the highway on both the left and right side of traffic. When entrance is not in use,"TRUCKS ENTERING HIGHWAY" sign shall be completely covered.*
6. *Existing drainage shall be maintained within the staging areas. If existing ditches are to be filled,temporary pipes shall be designed to convey existing flow.*
7. *The contractor shall allow for dynamic deflection of the existing guardrail and /or traffic service barrier for placing any material or equipment.*
8. *Construction entrances shall be in conformance with EC-11 at all applicable locations for the "active" work zone areas. The construction entrance shall include all appurtenances and materials necessary to ensure mud and debris shall be cleaned from construction equipment prior to exiting into the VDOT ROW (Travelway).*

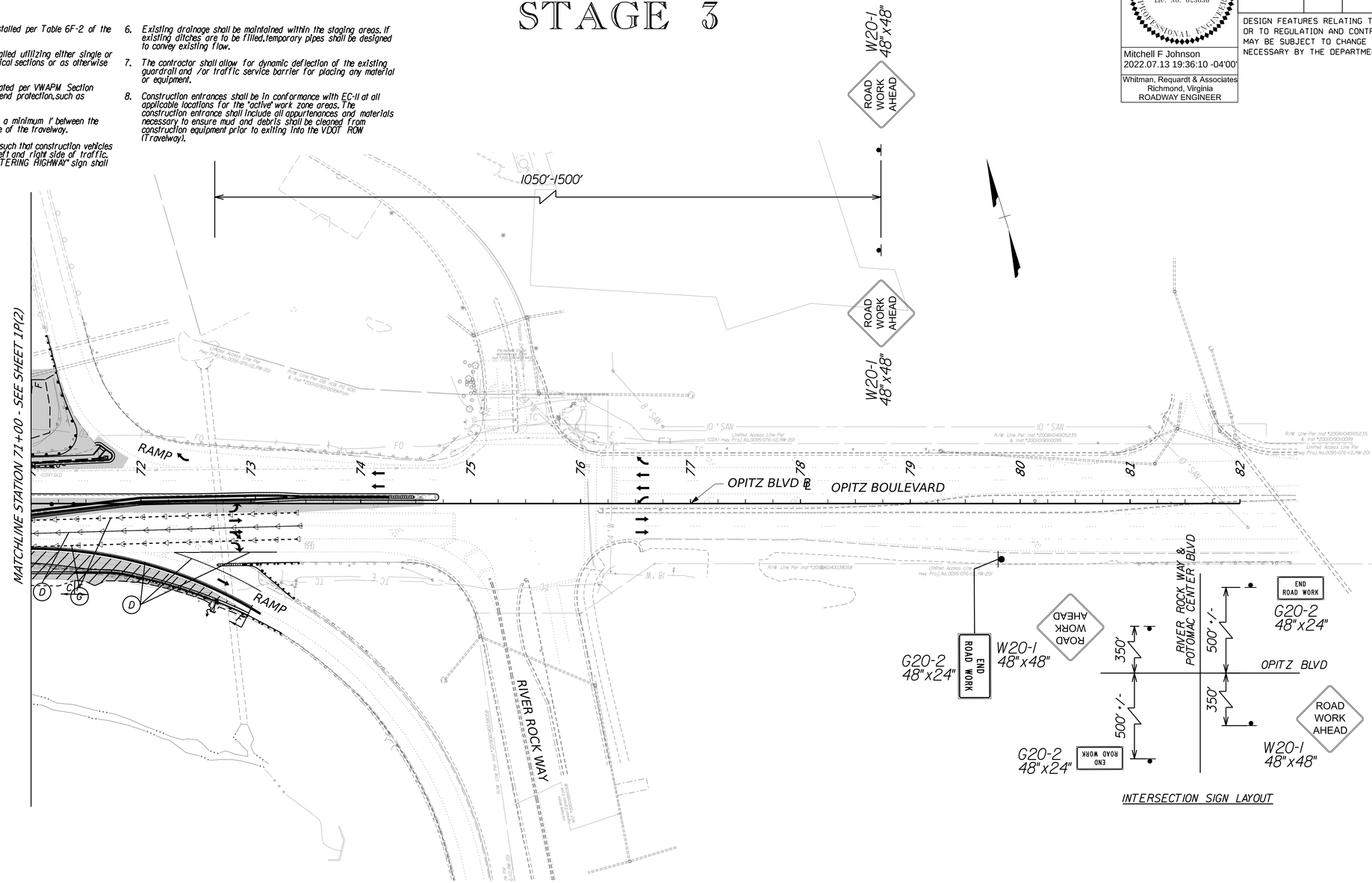

INTERSECTION SIGN LAYOUT

LEGEND

- CONSTRUCTION THIS STAGE
- CONSTRUCTION PREVIOUS STAGE
- SHOULDER STRENGTHENING
- TEMPORARY PAVEMENT
- TRAFFIC DIRECTION

(1) TRAFFIC BARRIER SERVICE CONCRETE (TBSC)
(2) GROUP 2 CHANNELIZING DEVICES
(3) IMPACT ATTEN. SERVICE TY.1
(4) FIXED OBJECT ATTACHMENT (TEMPORARY)
(A) TYPE A, YELLOW TEMP. PVMT LINE MRKG, 6" WIDTH
(B) TYPE A, WHITE TEMP. PVMT LINE MRKG, 6" WIDTH
(C) TYPE A, YELLOW TEMP. PVMT LINE MRKG, 8" WIDTH
(D) TYPE A, WHITE TEMP. PVMT LINE MRKG, 8" WIDTH
(E) TYPE A, WHITE TEMP. PVMT LINE MRKG, 6" WIDTH (10' LINE, 30' SPACE)
(F) TYPE A, WHITE TEMP. PVMT LINE MRKG, 8" WIDTH
(G) TYPE A, WHITE TEMP. PVMT LINE MRKG, 6" WIDTH (2' LINE, 13' SPACE)
(H) TEMPORARY STOP LINE
ONE-WAY TEMPORARY PAVEMENT MARKERS
TWO-WAY TEMPORARY PAVEMENT MARKERS
TYPE III BARRICADE

AFC PLANS

SCALE 0 50' 100'

PROJECT	SHEET NO.
0095-076-299	IP(4)

7/11/2022 4589300100IP(5).DGN
9:01:58 AM Plotted By: jlopez-ornelas

LIMITED ACCESS HIGHWAY By Resolution of the Highway Commission dated October 4, 1956.
By Resolution of the Highway Commission dated January 18, 1973.
By Resolution of the Commonwealth Transportation Board dated April 19, 2022

PROJECT MANAGER
SURVEYED BY, DATE
DESIGN BY
SUBSURFACE UTILITY BY, DATE

TEMPORARY TRAFFIC CONTROL PLANS
STAGE 3

NOTES:

1. Group 2 channelizing devices shall be installed per Table 6F-2 of the Virginia Work Area Protection Manual.
2. All temporary traffic barrier shall be installed utilizing either single or double faced barrier as indicated on typical sections or as otherwise noted in plans.
3. Temporary traffic barrier shall be terminated per VWAPM Section 6F.97 and Appendix A. Appropriate blunt end protection, such as attenuators, shall be installed as required.
4. Temporary traffic barrier shall be placed a minimum 1' between the face of the concrete barrier and the edge of the travelway.
5. Construction egress shall be coordinated such that construction vehicles are not entering the highway on both the left and right side of traffic. When entrance is not in use, "TRUCKS ENTERING HIGHWAY" sign shall be completely covered.
6. Existing drainage shall be maintained within the staging areas. If existing ditches are to be filled, temporary pipes shall be designed to convey existing flow.
7. The contractor shall allow for dynamic deflection of the existing guardrail and /or traffic service barrier for placing any material or equipment.
8. Construction entrances shall be in conformance with EC-11 at all applicable locations for the "active" work zone areas. The construction entrance shall include all appurtenances and materials necessary to ensure mud and debris shall be cleaned from construction equipment prior to exiting into the VDOT ROW (Travelway).

COMMONWEALTH OF VIRGINIA
MITCHELL F. JOHNSON
Lic. No. 023838
PROFESSIONAL ENGINEER

Mitchell F Johnson
2022.07.13 19:36:32 -04'00'
Whitman, Requardt & Associates
Richmond, Virginia
ROADWAY ENGINEER

REVISED	STATE	STATE ROUTE	STATE PROJECT	SHEET NO.
	VA.	95	0095-076-299,C-501	IP(5)

DESIGN FEATURES RELATING TO CONSTRUCTION OR TO REGULATION AND CONTROL OF TRAFFIC MAY BE SUBJECT TO CHANGE AS DEEMED NECESSARY BY THE DEPARTMENT

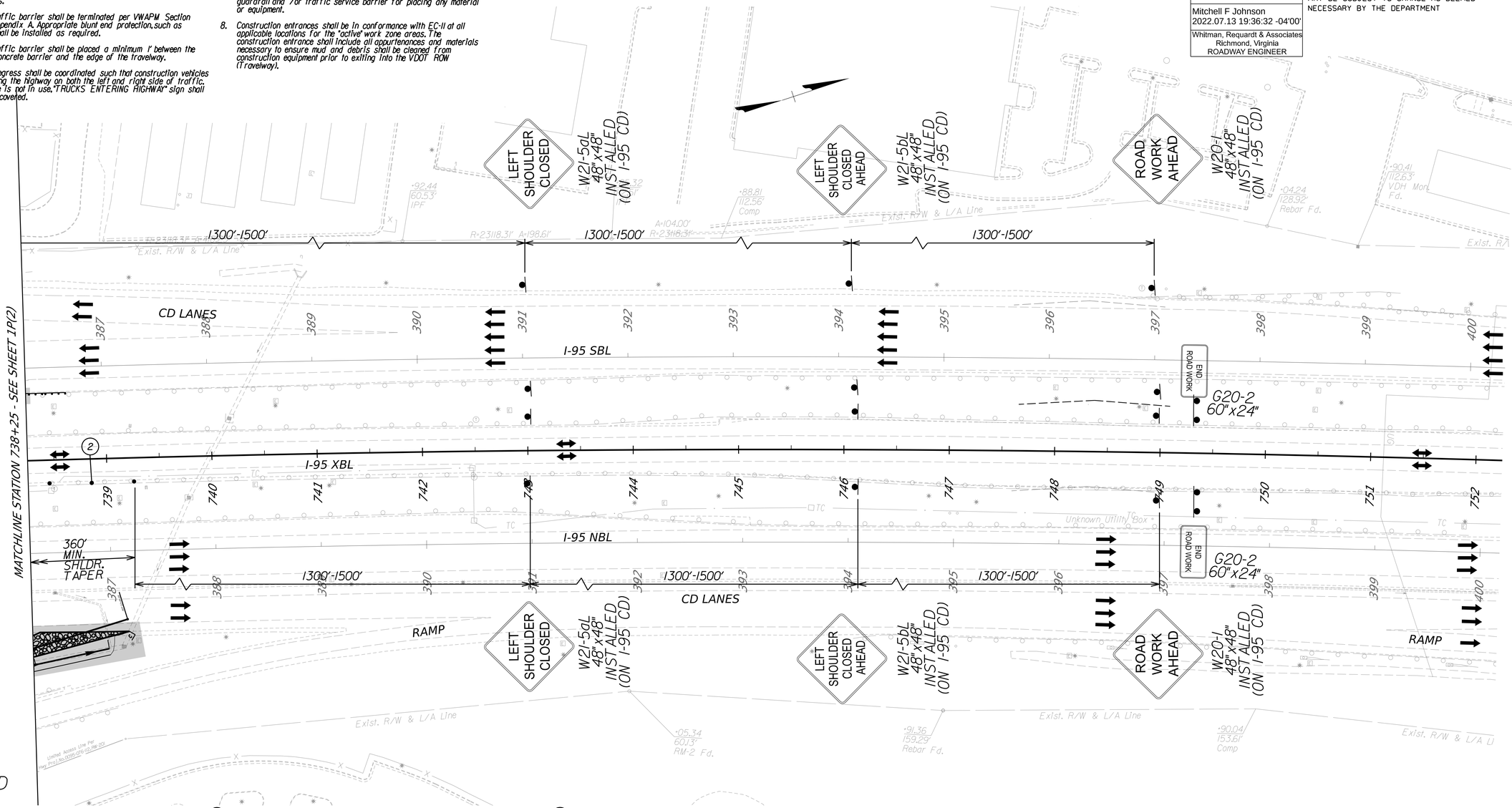

LEGEND

- CONSTRUCTION THIS STAGE
- CONSTRUCTION PREVIOUS STAGE
- SHOULDER STRENGTHENING
- TEMPORARY PAVEMENT
- TRAFFIC DIRECTION

(1) TRAFFIC BARRIER SERVICE CONCRETE (TBSC)
(2) GROUP 2 CHANNELIZING DEVICES
(3) IMPACT ATTEN. SERVICE TY.I
(4) FIXED OBJECT ATTACHMENT (TEMPORARY)
(A) TYPE A, YELLOW TEMP. PVMT LINE MRKG, 6" WIDTH
(B) TYPE A, WHITE TEMP. PVMT LINE MRKG, 6" WIDTH
(C) TYPE A, YELLOW TEMP. PVMT LINE MRKG, 8" WIDTH
(D) TYPE A, WHITE TEMP. PVMT LINE MRKG, 8" WIDTH
(E) TYPE A, WHITE TEMP. PVMT LINE MRKG, 6" WIDTH (10' LINE, 30' SPACE)
(F) TYPE A, WHITE TEMP. PVMT LINE MRKG, 8" WIDTH
(G) TYPE A, WHITE TEMP. PVMT LINE MRKG, 6" WIDTH (2' LINE, 13' SPACE)
(H) TEMPORARY STOP LINE
ONE-WAY TEMPORARY PAVEMENT MARKERS
TWO-WAY TEMPORARY PAVEMENT MARKERS
TYPE III BARRICADE

SCALE 0 50' 100'

AFC PLANS

PROJECT	SHEET NO.
0095-076-299	IP(5)

Cell Revised 12/11/12

7/11/2022 4589300100IQ(1).DGN
9:02:27 AM Plotted By: jlopez-ornelas

LIMITED ACCESS HIGHWAY By Resolution of the Highway Commission dated October 4, 1956.
By Resolution of the Highway Commission dated January 18, 1973.
By Resolution of the Commonwealth Transportation Board dated April 19, 2022

PROJECT MANAGER Rimpal Shah, P.E. (703) 259-2362 (NOVA District)
SURVEYED BY, DATE H&B Surveying and Mapping, LLC (804) 330-3781, 03/09/2021
DESIGN BY Whitman, Requardt, & Associates, LLP (804) 212-8700
SUBSURFACE UTILITY BY, DATE Accumark, Inc. (804) 550-7740, 07/07/2021

TEMPORARY TRAFFIC CONTROL PLANS
STAGE 4

NOTES:

1. Group 2 channelizing devices shall be installed per Table 6F-2 of the Virginia Work Area Protection Manual.
2. All temporary traffic barrier shall be installed utilizing either single or double faced barrier as indicated on typical sections or as otherwise noted in plans.
3. Temporary traffic barrier shall be terminated per VWAPM Section 6F.97 and Appendix A. Appropriate blunt end protection, such as attenuators, shall be installed as required.
4. Temporary traffic barrier shall be placed a minimum 1' between the face of the concrete barrier and the edge of the travelway.
5. Construction egress shall be coordinated such that construction vehicles are not entering the highway on both the left and right side of traffic. When entrance is not in use, "TRUCKS ENTERING HIGHWAY" sign shall be completely covered.
6. Existing drainage shall be maintained within the staging areas. If existing ditches are to be filled, temporary pipes shall be designed to convey existing flow.
7. The contractor shall allow for dynamic deflection of the existing guardrail and /or traffic service barrier for placing any material or equipment.
8. Construction entrances shall be in conformance with EC-II at all applicable locations for the "active" work zone areas. The construction entrance shall include all appurtenances and materials necessary to ensure mud and debris shall be cleaned from construction equipment prior to exiting into the VDOT ROW (Travelway).

COMMONWEALTH OF VIRGINIA
MITCHELL F. JOHNSON
Lic. No. 023838
PROFESSIONAL ENGINEER

Mitchell F Johnson
2022.07.13 19:36:57 -04'00'

Whitman, Requardt & Associates
Richmond, Virginia
ROADWAY ENGINEER

REVISED	STATE	STATE ROUTE	STATE PROJECT	SHEET NO.
	VA.	95	0095-076-299,C-501	IQ(1)

DESIGN FEATURES RELATING TO CONSTRUCTION OR TO REGULATION AND CONTROL OF TRAFFIC MAY BE SUBJECT TO CHANGE AS DEEMED NECESSARY BY THE DEPARTMENT

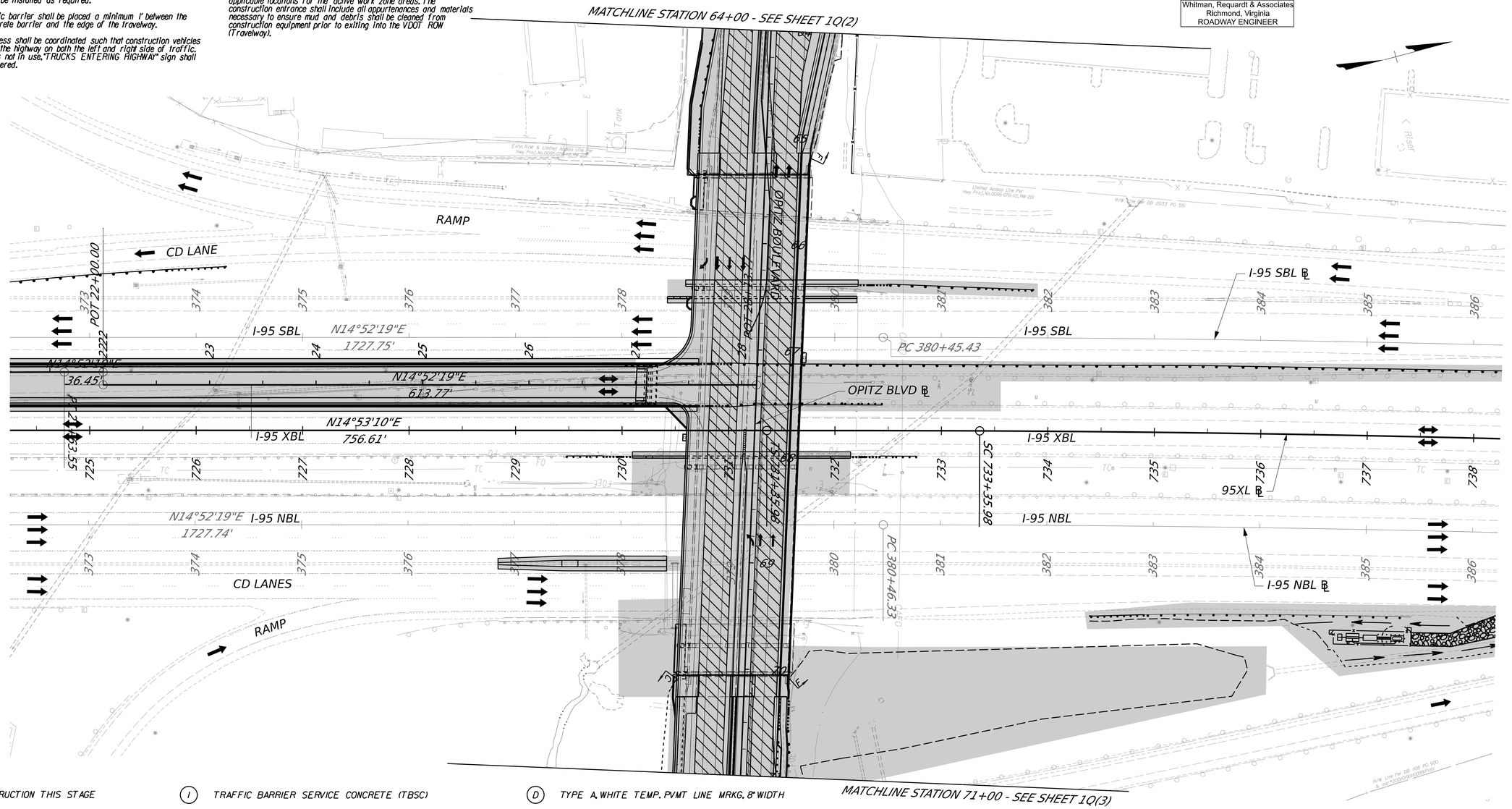

LEGEND

- CONSTRUCTION THIS STAGE
- CONSTRUCTION PREVIOUS STAGE
- SHOULDER STRENGTHENING
- TEMPORARY PAVEMENT
- TRAFFIC DIRECTION

(1) TRAFFIC BARRIER SERVICE CONCRETE (TBSC)
(2) GROUP 2 CHANNELIZING DEVICES
(3) IMPACT ATTEN. SERVICE TY.I
(4) FIXED OBJECT ATTACHMENT (TEMPORARY)
(A) TYPE A, YELLOW TEMP. PVMT LINE MRKG, 6" WIDTH
(B) TYPE A, WHITE TEMP. PVMT LINE MRKG, 6" WIDTH
(C) TYPE A, YELLOW TEMP. PVMT LINE MRKG, 8" WIDTH
(D) TYPE A, WHITE TEMP. PVMT LINE MRKG, 8" WIDTH
(E) TYPE A, WHITE TEMP. PVMT LINE MRKG, 6" WIDTH (10' LINE, 30' SPACE)
(F) TYPE A, WHITE TEMP. PVMT LINE MRKG, 8" WIDTH
(G) TYPE A, WHITE TEMP. PVMT LINE MRKG, 6" WIDTH (2' LINE, 13' SPACE)
(H) TEMPORARY STOP LINE
◁ ONE-WAY TEMPORARY PAVEMENT MARKERS
◇ TWO-WAY TEMPORARY PAVEMENT MARKERS
TYPE III BARRICADE

SCALE 0 50' 100'

AFC PLANS

PROJECT	SHEET NO.
0095-076-299	IQ(1)

Cell Revised 12/1/12

LIMITED ACCESS HIGHWAY

By Resolution of the Highway Commission dated October 4, 1956.
By Resolution of the Highway Commission dated January 18, 1973.
By Resolution of the Commonwealth Transportation Board dated April 19, 2022

PROJECT MANAGER _____
SURVEYED BY, DATE _____
DESIGN BY _____
SUBSURFACE UTILITY BY, DATE _____

TEMPORARY TRAFFIC CONTROL PLANS
STAGE 4

COMMONWEALTH OF VIRGINIA
MITCHELL F. JOHNSON
Lic. No. 023838
PROFESSIONAL ENGINEER

Mitchell F Johnson
2022.07.13 19:37:21 -04'00'

Whitman, Requardt & Associates
Richmond, Virginia
ROADWAY ENGINEER

REVISED	STATE	STATE ROUTE	STATE PROJECT	SHEET NO.
	VA.	95	0095-076-299,C-501	1Q(2)

DESIGN FEATURES RELATING TO CONSTRUCTION OR TO REGULATION AND CONTROL OF TRAFFIC MAY BE SUBJECT TO CHANGE AS DEEMED NECESSARY BY THE DEPARTMENT

NOTES:

1. *Group 2 channelizing devices shall be installed per Table 6F-2 of the Virginia Work Area Protection Manual.*
2. *All temporary traffic barrier shall be installed utilizing either single or double faced barrier as indicated on typical sections or as otherwise noted in plans.*
3. *Temporary traffic barrier shall be terminated per VWAPM Section 6F.97 and Appendix A. Appropriate blunt end protection, such as attenuators, shall be installed as required.*
4. *Temporary traffic barrier shall be placed a minimum 1' between the face of the concrete barrier and the edge of the travelway.*
5. *Construction egress shall be coordinated such that construction vehicles are not entering the highway on both the left and right side of traffic. When entrance is not in use, "TRUCKS ENTERING HIGHWAY" sign shall be completely covered.*
6. *Existing drainage shall be maintained within the staging areas. If existing ditches are to be filled, temporary pipes shall be designed to convey existing flow.*
7. *The contractor shall allow for dynamic deflection of the existing guardrail and /or traffic service barrier for placing any material or equipment.*
8. *Construction entrances shall be in conformance with EC-II at all applicable locations for the "active" work zone areas. The construction entrance shall include all appurtenances and materials necessary to ensure mud and debris shall be cleaned from construction equipment prior to exiting into the VDOT ROW (Travelway).*

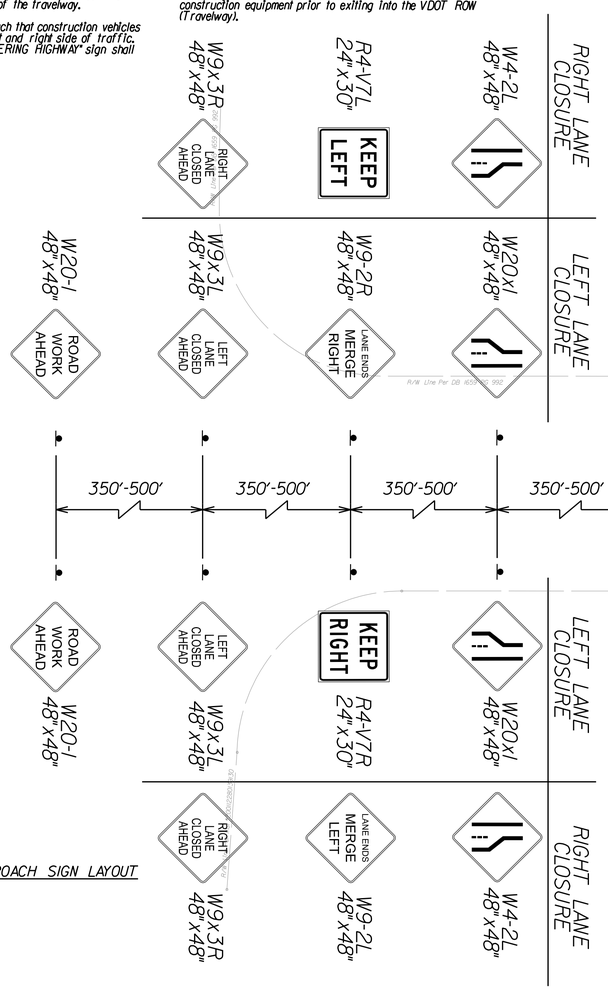

TYPICAL APPROACH SIGN LAYOUT

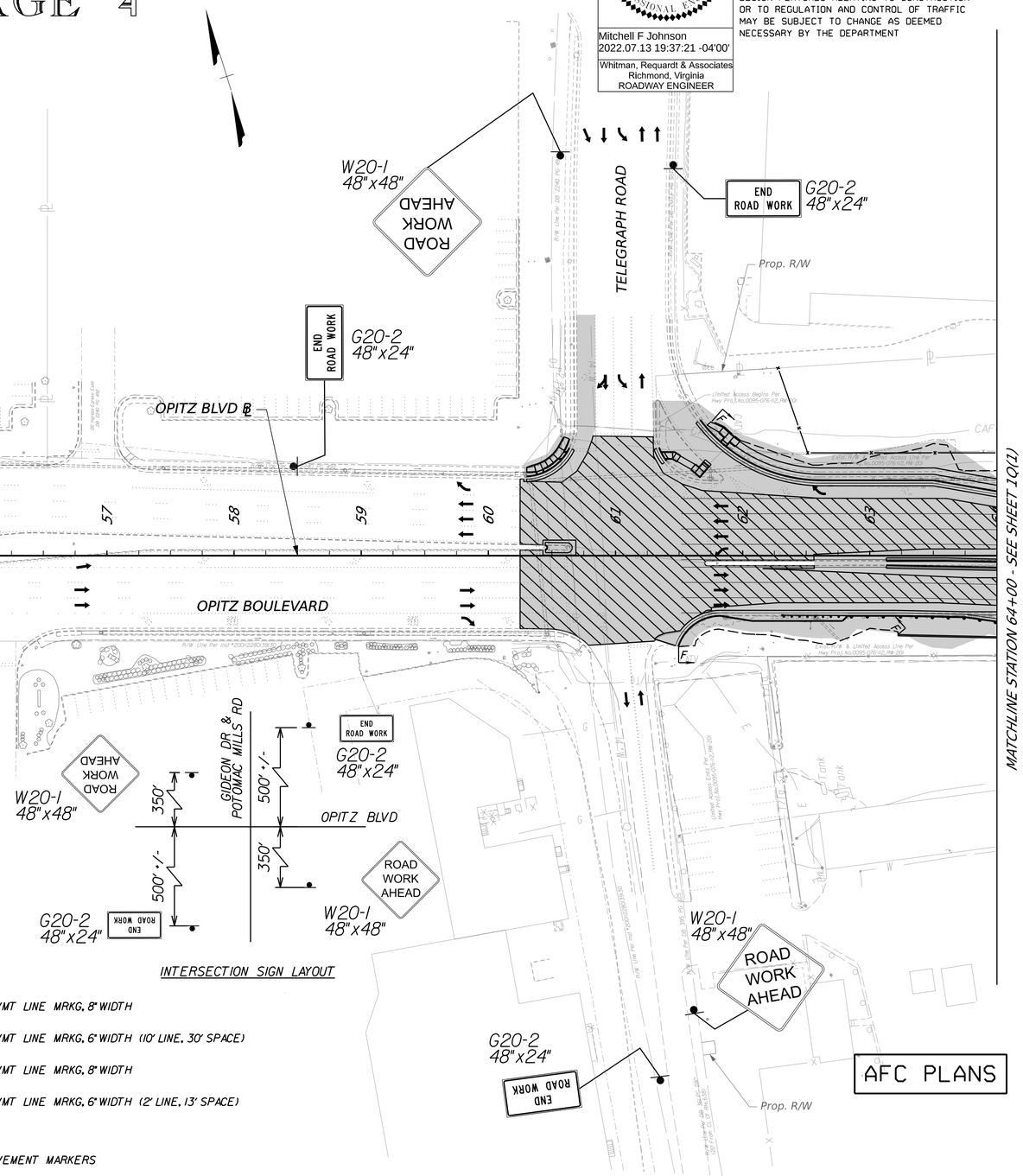

INTERSECTION SIGN LAYOUT

LEGEND

- CONSTRUCTION THIS STAGE
- CONSTRUCTION PREVIOUS STAGE
- SHOULDER STRENGTHENING
- TEMPORARY PAVEMENT
- TRAFFIC DIRECTION

(1) TRAFFIC BARRIER SERVICE CONCRETE (TBSC)
(2) GROUP 2 CHANNELIZING DEVICES
(3) IMPACT ATTEN. SERVICE TY.I
(4) FIXED OBJECT ATTACHMENT (TEMPORARY)
(A) TYPE A, YELLOW TEMP. PVMT LINE MRKG, 6" WIDTH
(B) TYPE A, WHITE TEMP. PVMT LINE MRKG, 6" WIDTH
(C) TYPE A, YELLOW TEMP. PVMT LINE MRKG, 8" WIDTH
(D) TYPE A, WHITE TEMP. PVMT LINE MRKG, 8" WIDTH
(E) TYPE A, WHITE TEMP. PVMT LINE MRKG, 6" WIDTH (10' LINE, 30' SPACE)
(F) TYPE A, WHITE TEMP. PVMT LINE MRKG, 8" WIDTH
(G) TYPE A, WHITE TEMP. PVMT LINE MRKG, 6" WIDTH (2' LINE, 13' SPACE)
(H) TEMPORARY STOP LINE
◁ ONE-WAY TEMPORARY PAVEMENT MARKERS
◇ TWO-WAY TEMPORARY PAVEMENT MARKERS
TYPE III BARRICADE

SCALE
0 50' 100'

PROJECT	SHEET NO.
0095-076-299	1Q(2)

LIMITED ACCESS HIGHWAY

By Resolution of the Highway Commission dated October 4, 1956
By Resolution of the Highway Commission dated January 18, 1973
By Resolution of the Commonwealth Transportation Board dated April 19, 2022

PROJECT MANAGER
SURVEYED BY, DATE
DESIGN BY
SUBSURFACE UTILITY BY, DATE

TEMPORARY TRAFFIC CONTROL PLANS
STAGE 4

NOTES:

1. Group 2 channelizing devices shall be installed per Table 6F-2 of the Virginia Work Area Protection Manual.
2. All temporary traffic barrier shall be installed utilizing either single or double faced barrier as indicated on typical sections or as otherwise noted in plans.
3. Temporary traffic barrier shall be terminated per VWAPM Section 6F.97 and Appendix A. Appropriate blunt end protection, such as attenuators, shall be installed as required.
4. Temporary traffic barrier shall be placed a minimum 1' between the face of the concrete barrier and the edge of the travelway.
5. Construction egress shall be coordinated such that construction vehicles are not entering the highway on both the left and right side of traffic. When entrance is not in use, "TRUCKS ENTERING HIGHWAY" sign shall be completely covered.
6. Existing drainage shall be maintained within the staging areas. If existing ditches are to be filled, temporary pipes shall be designed to convey existing flow.
7. The contractor shall allow for dynamic deflection of the existing guardrail and /or traffic service barrier for placing any material or equipment.
8. Construction entrances shall be in conformance with EC-II at all applicable locations for the "active" work zone areas. The construction entrance shall include all appurtenances and materials necessary to ensure mud and debris shall be cleaned from construction equipment prior to exiting into the VDOT ROW (Travelway).

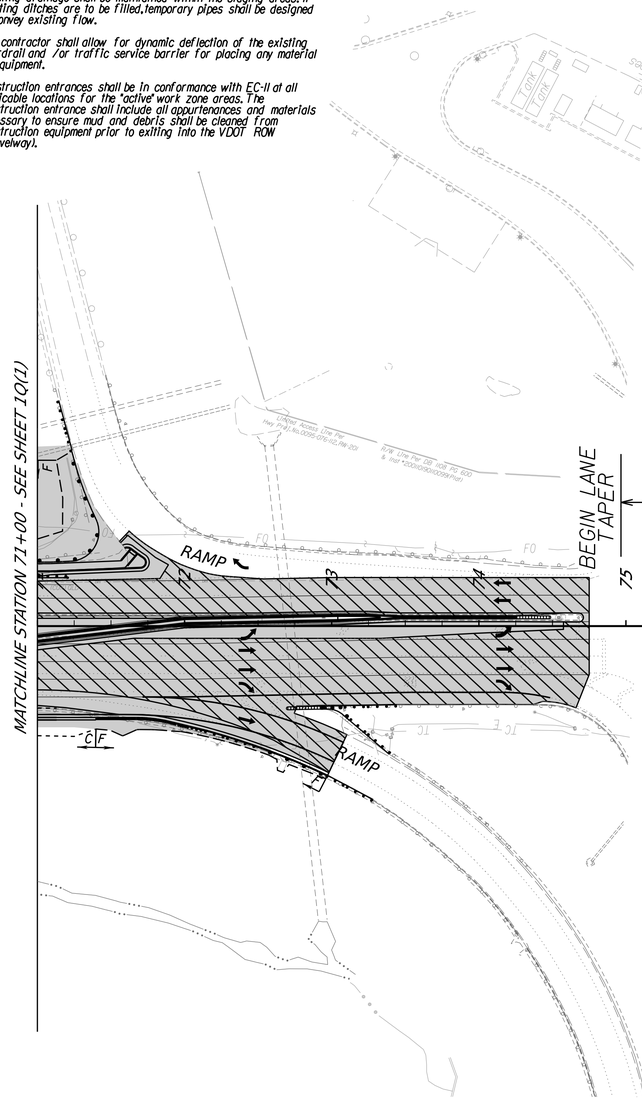

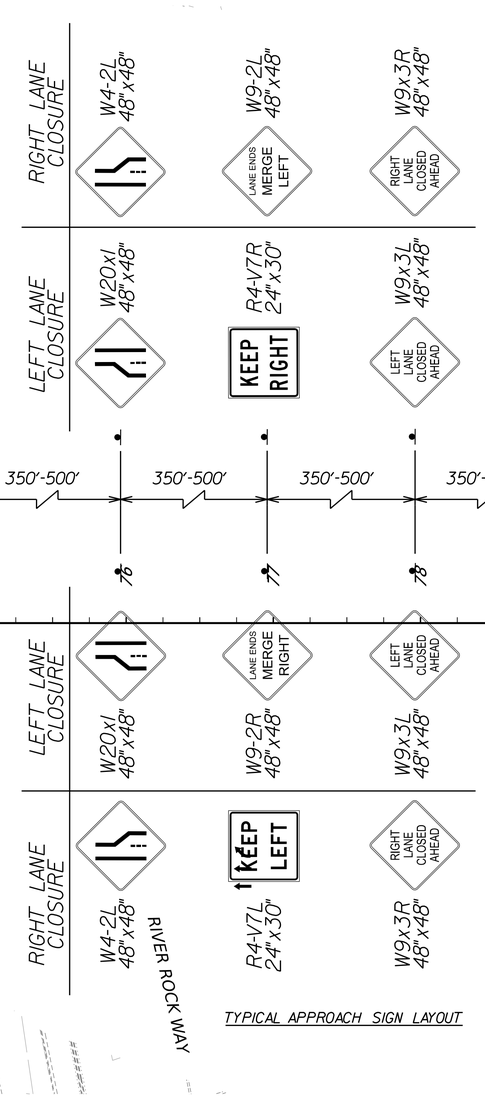

TYPICAL APPROACH SIGN LAYOUT

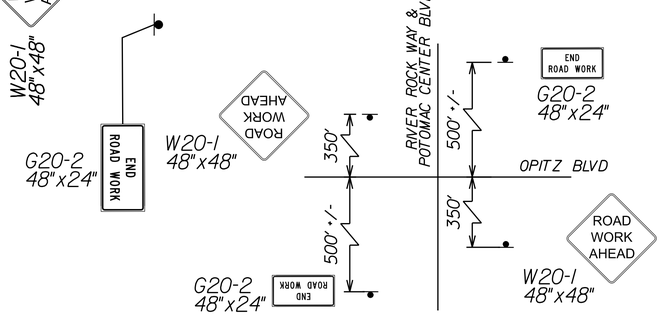

INTERSECTION SIGN LAYOUT

LEGEND

- CONSTRUCTION THIS STAGE
- CONSTRUCTION PREVIOUS STAGE
- SHOULDER STRENGTHENING
- TEMPORARY PAVEMENT
- TRAFFIC DIRECTION

(1) TRAFFIC BARRIER SERVICE CONCRETE (TBSC)
(2) GROUP 2 CHANNELIZING DEVICES
(3) IMPACT ATTEN. SERVICE TY.I
(4) FIXED OBJECT ATTACHMENT (TEMPORARY)
(A) TYPE A, YELLOW TEMP. PVMT LINE MRKG, 6" WIDTH
(B) TYPE A, WHITE TEMP. PVMT LINE MRKG, 6" WIDTH
(C) TYPE A, YELLOW TEMP. PVMT LINE MRKG, 8" WIDTH
(D) TYPE A, WHITE TEMP. PVMT LINE MRKG, 8" WIDTH
(E) TYPE A, WHITE TEMP. PVMT LINE MRKG, 6" WIDTH (10' LINE, 30' SPACE)
(F) TYPE A, WHITE TEMP. PVMT LINE MRKG, 8" WIDTH
(G) TYPE A, WHITE TEMP. PVMT LINE MRKG, 6" WIDTH (2' LINE, 13' SPACE)
(H) TEMPORARY STOP LINE
◁ ONE-WAY TEMPORARY PAVEMENT MARKERS
◇ TWO-WAY TEMPORARY PAVEMENT MARKERS
TYPE III BARRICADE

SCALE 0 50' 100'

COMMONWEALTH OF VIRGINIA
MITCHELL F. JOHNSON
Lic. No. 023838
PROFESSIONAL ENGINEER

Mitchell F Johnson
2022.07.13 19:37:41 -04'00'

Whitman, Requardt & Associates
Richmond, Virginia
ROADWAY ENGINEER

REVISED	STATE	STATE ROUTE	STATE PROJECT	SHEET NO.
	VA.	95	0095-076-299,C-501	1Q(3)

DESIGN FEATURES RELATING TO CONSTRUCTION OR TO REGULATION AND CONTROL OF TRAFFIC MAY BE SUBJECT TO CHANGE AS DEEMED NECESSARY BY THE DEPARTMENT

AFC PLANS

	PROJECT	SHEET NO.
	0095-076-299	1Q(3)

LIMITED ACCESS HIGHWAY

By Resolution of the Highway Commission dated October 4, 1956.
By Resolution of the Highway Commission dated January 18, 1973.
By Resolution of the Commonwealth Transportation Board dated April 19, 2022

PROJECT MANAGER Rimpal Shah, P.E. (703) 259-2362 (NOVA District) _____
SURVEYED BY, DATE H&B Surveying and Mapping, LLC (804) 330-3781, 03/09/2021
DESIGN BY Whitman, Requardt, & Associates, LLP (804) 212-8700 _____
SUBSURFACE UTILITY BY, DATE Accumark, Inc. (804) 550-7740, 07/07/2021

GENERAL NOTES

GRADING

G-1 The grade line denotes top of finished pavement unless shown otherwise on typical sections or plans.

G-3 Earthwork quantities on this project are based on anticipated settlement and may require adjusting during construction. Payment will be made only for quantities actually moved.

G-4 The cost of removal of all existing concrete items located in the area to be graded, including, but not limited to the following, shall be included in the price bid for regular excavation: concrete curb and gutter, concrete ditches, pipes, headwalls and end sections.

G-6 The borrow material for this project shall be a minimum CBR 5 or as approved by the Materials Engineer.

G-7 Material from regular excavation which is suitable for stabilization with hydraulic cement (lime) shall be placed in the top portion of the subgrade.

DRAINAGE

D-1 The horizontal location of all drainage structures shown on these plans is approximate only, with the exception of structures showing specific stations, special design bridges and storm sewer systems.

D-2 The horizontal location and invert elevations shown for proposed culverts and storm sewer outfall pipes are based on existing survey data and required design criteria. If during construction, it is found that the horizontal location or invert elevations shown on the plans differ significantly from the horizontal location or elevations of the stream or swale in which the culvert or storm sewer outfall pipe is to be placed, the Engineer shall confer with, and get approval from, the applicable District Drainage Engineer before installing the culvert or storm sewer outfall pipe.

D-3 The "H" dimensions shown on plans for drop inlets and junction boxes and the "L.F." dimensions shown for manholes are for estimating purposes and are based on the proposed invert elevations shown for the structure and the anticipated top (rim) elevation based on existing or proposed finished grade. The actual "H" or "L.F." dimensions are to be determined by the contractor from field conditions.

D-6 Pipes shall conform to any of the allowable types shown on sheet number 14(2), within the applicable height of cover limitations. For strength, sheet thickness, or class designation; available sizes; height of cover limitations; and other restrictions for a particular pipe type or height of cover, see the VDOT Road and Bridge Standard PC-1. Structural plate pipe may be substituted for corrugated pipe of the same size, provided the substitution complies with the applicable sections of the VDOT Road and Bridge Standards PC-1.

D-10 The proposed riprap may be omitted by the Engineer if the slope designated for placement of riprap is found to be comprised of solid rock or closely consolidated boulders with soundness, size and weight equal to, or exceeding, the specifications for the proposed riprap.

D-12 All existing drainage facilities labeled "To Be Abandoned" shall be left in place, backfilled and plugged in accordance with the VDOT Road and Bridge Standard PP-1. Basis of Payment will be C.Y. of Flowable Backfill.

D-14 Proposed drop inlets with a height (H) less than the standard minimum shown in the VDOT Road and Bridge Standards shall be considered and paid for as Standard Drop Inlets for the type specified. Pipes with less than standard minimum finished height of cover shall be noted as such in the drainage description for the pipe. Specific pipe bedding and cover requirements are provided in the applicable PB-1 and PC-1 standard drawings of the VDOT Road and Bridge Standards.

D-16 When CG-6 or CG-7 is specified on a radius (such as at a street intersection), the Engineer may approve a decrease in the cross slope of the gutter to facilitate proper drainage.

D-17 St'd. SL-1 Safety Slab locations are based on the assumed use of precast structures. If cast-in-place structures are utilized, and the interior chamber dimensions (length and width, or diameter) are less than 4 feet, the safety slabs shall not be installed.

D-A In addition to the visual inspection performed by the Department during the initial installation of storm sewer pipes and pipe culverts, a post installation visual/video camera inspection shall be conducted by the Contractor in accordance with the requirements of this specification and VTM 123 on all storm sewer pipe and a selected number of pipe culverts.

PAVEMENT

P-2 The pavement materials on this project will be paid for on a tonnage basis. The weight will vary in accordance with the specific gravity of the aggregates and the asphaltic content of the mix actually used to secure the design depth. The weight of the asphalt concrete is based on 95% of the theoretical maximum density.

INCIDENTALS

I-4 All trees located within a minimum of 30 feet of the edge of pavement, within the limits of the right of way or construction easement, unless otherwise noted on plans or directed by the Engineer, shall be removed, as provided for a Section 301 of the applicable VDOT Road and Bridge Specifications.

I-9 When no centerline alignment is shown for a proposed entrance, the entrance shall be constructed in the same location as the existing entrance.

I-16 The "underground utilities" survey data on this project has been provided by consultant and copies are available from the Department.

I-18 All pavement markings and traffic flow arrows shown on the roadway construction plans are schematic only. The actual location and application of pavement markings shall be in accordance with Section 704 of the applicable VDOT Road and Bridge Specifications, MUTCD, sequence of construction/ traffic control plans and as directed by the Engineer.

I-19 The following sources, under contract with VDOT, have provided information on this project:

Hydraulic Design	-	Whitman Requardt & Associates
Roadway Design	-	Whitman Requardt & Associates
Traffic Design	-	Whitman Requardt & Associates
Survey	-	H&B Surveying & Mapping LLC
MOT	-	Whitman Requardt & Associates

If questions or problems arise during construction, please contact the Area Construction Engineer. DO NOT CONTACT THE OUTSIDE SOURCES.

I-20 The Official Electronic PDF Version of the plans will override the paper copies or prints of specific layers.

Portions of this plan assembly have been CADD generated. To assist in the preparation of the bid and construction of the project, Microstation format (.dgn) files will be made available to the prime contractor during bids and after award of the contract.

I-21 All electronic plan assemblies will include the construction plans in two formats: .pdf files and MicroStation format (.dgn) files. Only the .pdf files will be considered as part of the official plan assembly.

The MicroStation format (.dgn) files are furnished only as information for the contractor. These plans are developed in layers (levels) to aid in readability. (See the VDOT CADD Manual for CADD level structure). However, the construction items may or may not be in the proper layering scheme as described in the VDOT CADD Manual. The MicroStation files will only match the scanned files if all required levels are turned on. A MicroStation Software license is required to be able to read these files.

STORMWATER MANAGEMENT

S-1 CLEARING AND GRUBBING OF SWM BASIN SITE - The area where the dam is to be constructed and the area upstream of the dam, to an elevation equal to the crest of the dam (maximum ponded water elevation), shall be cleared and grubbed in accordance with Section 301 of the applicable VDOT Road and Bridge Specifications.

S-2 SWM BASIN DAM CONSTRUCTION - The dam for detention basins (no permanent pool) shall conform to the details contained in the plans and shall be constructed in accordance with Section 303 of the applicable VDOT Road and Bridge Specifications. The native material on which the dam will set shall meet the specifications for AASHTO Type A-4 or finer material. Where the native material does not meet this requirement, the area beneath the dam is to be excavated a minimum of 4' and backfilled with a material meeting the AASHTO Type A-4 or finer classification unless otherwise specified in the plans. The material used for the embankment of the dam shall be AASHTO Type A-4 or finer or otherwise specified in the plans. Dams with foundation and embankment material not meeting the above requirements or dams greater than 15' in height, or dams for retention basins (permanent pool) shall incorporate a membrane-lined trench, a homogenous embankment with seepage controls, a zoned embankment or other such approved designs as specified in the plans.

S-3 SWM BASIN OUTLET PIPE - The pipe culvert under or through the dam for detention basins (no permanent pool) shall be reinforced concrete pipe with rubber gaskets in accordance with Section 232 and 212 of the applicable VDOT Road and Bridge Specifications.

The connection between the pipe culvert and the SWM-1 Drainage Structure (or other control structure) shall be made watertight as approved by the Engineer and the cost shall be included in the price bid for pipe.

S-4 The SWM-1 Drainage Structure (or other control structure) shall have 4" high numbers and 1" wide stripes painted at 1' intervals as shown on the Standard Drawings or detail sheets. The numbers and stripes are to be installed at the time of the initial installation of the SWM-1 Drainage Structure (or other control structure). Paint and application shall be in accordance with Section 231 and 411 of the applicable VDOT Road and Bridge Specifications and the cost is to be included in the price bid for the applicable structure.

S-5 All SWM Basins designated for use as temporary sediment basins shall be constructed during the initial phase of earth moving activities or as specified by the plans or directed by the Engineer. During project construction, the SWM-1 Drainage Structure (or other control structure) shall be modified in accordance with the Standard Drawings or plan details in order to provide a temporary sediment basin with both a "wet" storage volume (permanent pool) and a "dry" storage volume. Sediment accumulated in the basin shall be removed when the volume of the "wet" storage (permanent pool) has been reduced by 50%. Sediment shall be disposed of in accordance with Section 106.04 of the applicable VDOT Road and Bridge Specifications. When project construction is complete to a stage where no additional sediment from the project is expected to enter the basin, as determined by the Engineer, the basin shall be cleaned out and restored to the original design elevations, the area stabilized and all temporary modifications to the SWM-1 Drainage Structure (or other control structure) removed.

EROSION AND SEDIMENT CONTROL (ESC)

E-1 If the removal of Brush Silt Barrier is specified by the plans or required by the Engineer, the cost of removal and disposal of brush shall be in accordance with Section 109 of the applicable VDOT Road and Bridge Specifications.

E-2 Rock for Check Dams, Inlet Protection, Erosion Control Stone and Riprap shall be in accordance with Section 203 and Section 414 of the applicable VDOT Road and Bridge Specifications.

E-3 The following symbols are used to depict Erosion Control items in the plan assembly:

EC-2, Ty. 1 / EC-2, Ty. 2 / EC-2, Ty. 3 / EC-2, Ty. 4	Denotes Rolled Erosion Control Product, Temporary, St'd. EC-2 Type 1, 2, 3 or 4
EC-3, Ty. 1 / EC-3, Ty. 2 / EC-3, Ty. 3	Denotes Rolled Erosion Control Product, Permanent, St'd. EC-3 Type 1, 2 or 3
TSF-A / TSF-B	Denotes Temporary Silt Fence, St'd EC-5 Type A or B
TCD	Denotes Temporary Check Dam, St'd EC-16
TDC	Denotes Temporary Diversion Channel, St'd EC-12
DD	Denotes Temporary Diversion Dike, St'd EC-9
TC-I	Denotes Turbidity Curtain, Type - Impervious
TC-P	Denotes Turbidity Curtain, Type - Pervious
RCD-1	Denotes Rock Check Dam, Type I; St'd EC-4
RCD-2	Denotes Rock Check Dam, Type II; St'd EC-4
IP-A	Denotes Inlet Protection, Type A; St'd EC-6
IP-B	Denotes Inlet Protection, Type B; St'd EC-6
TSI	Denotes Slope Interrupter; St'd EC-15

E-4 Permanent vegetation shall be established on all denuded areas not otherwise stabilized with non-erodible materials. See the Roadside Development Sheet for details on permanent vegetation establishment.

COMMONWEALTH OF VIRGINIA
MITCHELL F. JOHNSON
Lic. No. 023838
PROFESSIONAL ENGINEER

Mitchell F Johnson
2022.07.13 19:38:11 -04'00'

Whitman, Requardt & Associates
Richmond, Virginia
ROADWAY ENGINEER

REVISED	STATE	STATE ROUTE	STATE PROJECT	SHEET NO.
	VA.	95	0095-076-299,C-501	2

DESIGN FEATURES RELATING TO CONSTRUCTION OR TO REGULATION AND CONTROL OF TRAFFIC MAY BE SUBJECT TO CHANGE AS DEEMED NECESSARY BY THE DEPARTMENT

AFC PLANS

	PROJECT	SHEET NO.
	0095-076-299	2

Cell Revised 12/1/12

LIMITED ACCESS HIGHWAY

By Resolution of the Highway Commission dated October 4, 1956.
By Resolution of the Highway Commission dated January 18, 1973.
By Resolution of the Commonwealth Transportation Board dated April 19, 2022

PROJECT MANAGER Rimpal Shah, P.E. (703) 259-2362 (NOVA District) _____
SURVEYED BY, DATE B&B Surveying and Mapping, LLC (804) 330-3781, 03/09/2021
DESIGN BY Whitman, Requardt, & Associates, LLP (804) 212-8700 _____.
SUBSURFACE UTILITY BY, DATE Accumark, Inc. (804) 550-7740, 07/07/2021

TYPICAL SECTIONS

COMMONWEALTH OF VIRGINIA — JEFFREY S. BASFORD — Lic. No. 043143 — PROFESSIONAL ENGINEER

Jeffrey S Basford
2022.07.15 15:39:45 -04'00'
Whitman, Requardt & Associates
Baltimore, Maryland
MATERIALS ENGINEER

COMMONWEALTH OF VIRGINIA — MITCHELL F. JOHNSON — Lic. No. 023838 — PROFESSIONAL ENGINEER

Mitchell F Johnson
2022.07.13 19:39:09 -04'00'
Whitman, Requardt & Associates
Richmond, Virginia
ROADWAY ENGINEER

REVISED	STATE	STATE ROUTE	STATE PROJECT	SHEET NO.
	VA.	95	0095-076-299,C-501	2A(1)

DESIGN FEATURES RELATING TO CONSTRUCTION OR TO REGULATION AND CONTROL OF TRAFFIC MAY BE SUBJECT TO CHANGE AS DEEMED NECESSARY BY THE DEPARTMENT

* SEE GORE DETAILS SHEET 2B(1)

RAMP DBSR

STA. 11+10.33 TO STA. 19+96.50

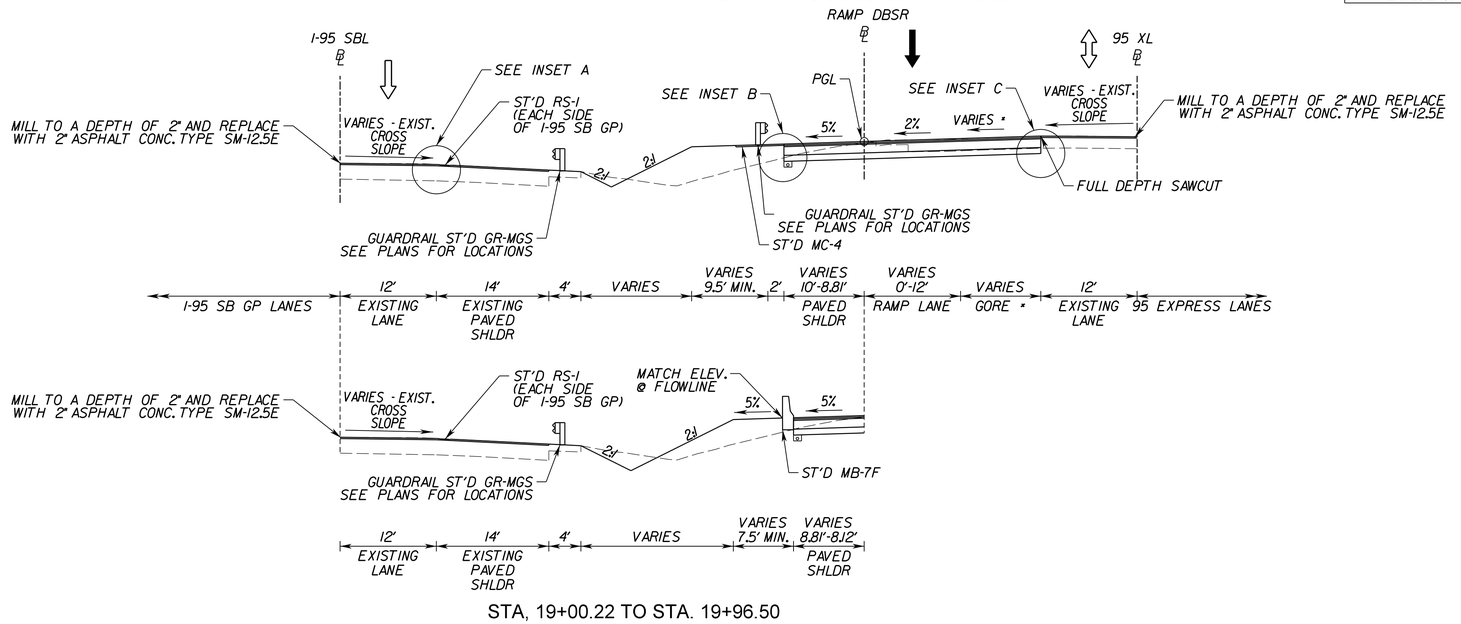

STA, 19+00.22 TO STA. 19+96.50

RAMP DBSR

STA. 19+96.50 TO STA. 23+83.22

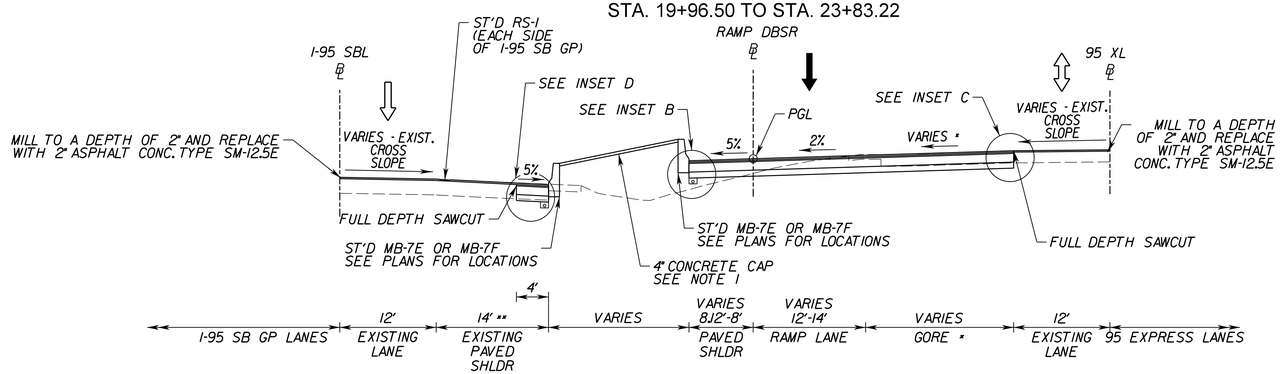

INSET A

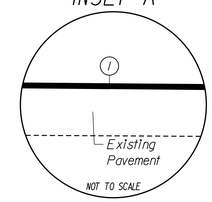

INSET B

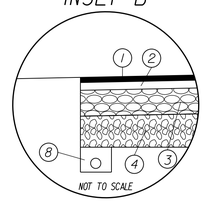

INSET C

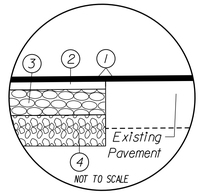

INSET D

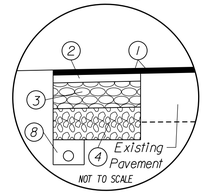

Pavement Legend

1. Asphalt Concrete Surface Course, Type SM-12.5E - 2 Inch Depth
2. Asphalt Concrete Intermediate Course, Type 19.0D - 2 Inch Depth
3. Asphalt Concrete Base Course, Type BM-25.0A - 11 Inch Depth
4. Aggregate Base Material, Type I, Size No. 21 B - 15 Inch Depth
5. Asphalt Concrete Surface Course, Type SM-9.5D - 2 Inch Depth
6. Asphalt Concrete Base Course, Type BM-25.0A - 8 Inch Depth
7. Aggregate Base Material, Type I, Size No. 21 B - 6 Inch Depth (For Opitz Blvd. widening on the high side of exist. pavement, 6" 21B will be replaced with 6" CTA base, in accordance with VDOT Special Provision for cement treated aggregate (CTA base.
8. ST'D UD-4 Underdrain
9. Aggregate Base Material, Type I, Size No. 21 B - 4 Inch Depth
10. Hydraulic Cement Conc. Sidewalk, Class A3 - 4 Inch Depth
11. Asphalt Concrete Intermediate Course, Type 19.0A - 2 Inch Depth

NOTES:

1. MEDIAN BARRIER SHALL BE ST'D MB-7E WHERE DISTANCE BETWEEN BACK OF BARRIERS IS LESS THAN OR EQUAL TO 8'. MEDIAN BARRIER SHALL BE ST'D MB-7F WHERE DISTANCE BETWEEN BACK OF BARRIERS IS GREATER THAN 8', AND WILL HAVE 4" CONCRETE CAP (2% MIN SLOPE, 50% MAX SLOPE). AREA BETWEEN BARRIERS SHALL BE BACKFILLED WITH COARSE AGGREGATE BACKFILL PER ST'D MB-7E AND GRADED TO DRAIN. CAP SHALL INCLUDE * 5X8" DOWELLS @ 30" C-C PER ST'D MB-7E.
2. PAVEMENT WIDENING SHALL BE IN ACCORDANCE WITH VDOT STANDARD WP-2.
3. EXISTING UD-4 WITHIN WIDENING AREA SHALL BE DEMOLISHED AND REPLACED.

* SEE GORE DETAILS SHEET 2B(1)

** 14' to 12' SHOULDER, STA 321+41.54 TO STA 322+35.79 ON SHEET 5. SEE PLANS FOR ADDITIONAL INFORMATION.

AFC PLANS

NOT TO SCALE	PROJECT 0095-076-299	SHEET NO. 2A(1)

LIMITED ACCESS HIGHWAY

By Resolution of the Highway Commission dated October 4, 1956.
By Resolution of the Highway Commission dated January 18, 1973.
By Resolution of the Commonwealth Transportation Board dated April 19, 2022

PROJECT MANAGER Rimpal Shah, P.E. (703) 259-2362 (NOVA District)
SURVEYED BY, DATE E&B Surveying and Mapping, LLC (804) 330-3781, 03/09/2021
DESIGN BY Whitman, Requardt, & Associates, LLP (804) 212-8700
SUBSURFACE UTILITY BY, DATE Accumark, Inc. (804) 550-2740, 07/07/2021

TYPICAL SECTIONS

COMMONWEALTH OF VIRGINIA
JEFFREY S. BASFORD
Lic. No. 043143
PROFESSIONAL ENGINEER

Jeffrey S Basford
2022.07.15 15:51:31 -04'00'
Whitman, Requardt & Associates
Baltimore, Maryland
MATERIALS ENGINEER

COMMONWEALTH OF VIRGINIA
MITCHELL F. JOHNSON
Lic. No. 023838
PROFESSIONAL ENGINEER

Mitchell F Johnson
2022.07.13 19:39:31 -04'00'
Whitman, Requardt & Associates
Richmond, Virginia
ROADWAY ENGINEER

REVISED	STATE	STATE ROUTE	STATE PROJECT	SHEET NO.
	VA.	95	0095-076-299,C-501	2A(2)

DESIGN FEATURES RELATING TO CONSTRUCTION OR TO REGULATION AND CONTROL OF TRAFFIC MAY BE SUBJECT TO CHANGE AS DEEMED NECESSARY BY THE DEPARTMENT

* 14' to 12' SHOULDER. STA 321+41.54 TO STA 322+35.79 ON SHEET 5. SEE PLANS FOR ADDITIONAL INFORMATION.

RAMP DBSR
STA. 23+83.22 TO STA. 23+93.21

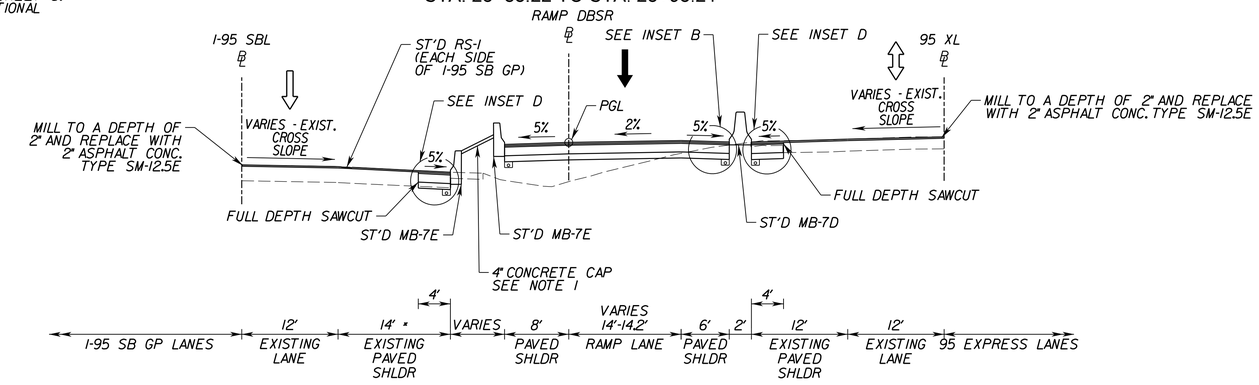

RAMP DBSR
STA. 23+93.21 TO STA. 24+82.15

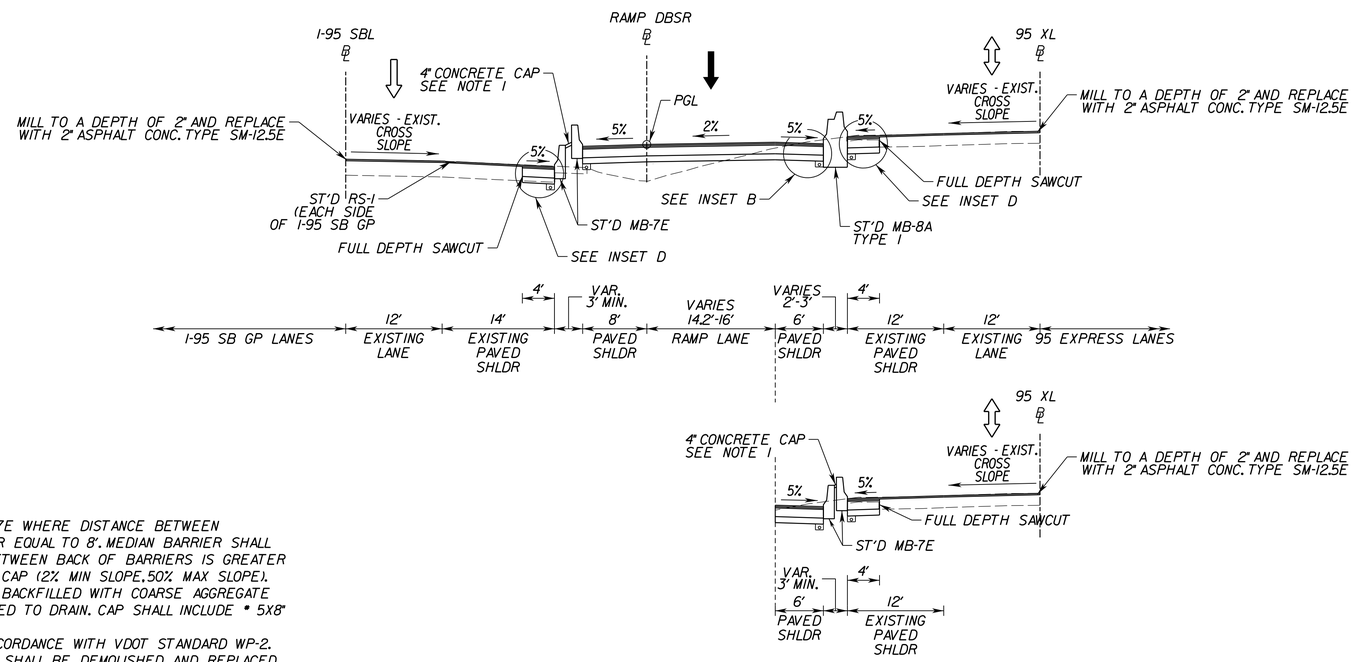

STA. 24+82.15 TO STA. 25+46.05

INSET B

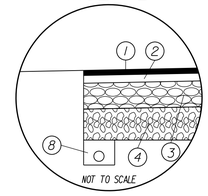

INSET D

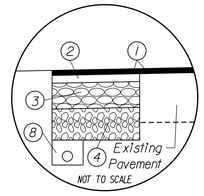

Pavement Legend

1. Asphalt Concrete Surface Course, Type SM-12.5E - 2 Inch Depth
2. Asphalt Concrete Intermediate Course, Type 19.0D - 2 Inch Depth
3. Asphalt Concrete Base Course, Type BM-25.0A - 11 Inch Depth
4. Aggregate Base Material, Type I, Size No. 21 B - 15 Inch Depth
5. Asphalt Concrete Surface Course, Type SM-9.5D - 2 Inch Depth
6. Asphalt Concrete Base Course, Type BM-25.0A - 8 Inch Depth
7. Aggregate Base Material, Type I, Size No. 21 B - 6 Inch Depth (For Opitz Blvd. widening on the high side of exist. pavement, 6" 21B will be replaced with 6" CTA base, in accordance with VDOT Special Provision for cement treated aggregate (CTA base.
8. ST'D UD-4 Underdrain
9. Aggregate Base Material, Type I, Size No. 21 B - 4 Inch Depth
10. Hydraulic Cement Conc. Sidewalk, Class A3 - 4 Inch Depth
11. Asphalt Concrete Intermediate Course, Type 19.0A - 2 Inch Depth

NOTES:
1. MEDIAN BARRIER SHALL BE ST'D MB-7E WHERE DISTANCE BETWEEN BACK OF BARRIERS IS LESS THAN OR EQUAL TO 8'. MEDIAN BARRIER SHALL BE ST'D MB-7F WHERE DISTANCE BETWEEN BACK OF BARRIERS IS GREATER THAN 8', AND WILL HAVE 4" CONCRETE CAP (2% MIN SLOPE, 50% MAX SLOPE). AREA BETWEEN BARRIERS SHALL BE BACKFILLED WITH COARSE AGGREGATE BACKFILL PER ST'D MB-7E AND GRADED TO DRAIN. CAP SHALL INCLUDE # 5X8" DOWELLS @ 30" C-C PER ST'D MB-7E.
2. PAVEMENT WIDENING SHALL BE IN ACCORDANCE WITH VDOT STANDARD WP-2.
3. EXISTING UD-4 WITHIN WIDENING AREA SHALL BE DEMOLISHED AND REPLACED.

AFC PLANS

NOT TO SCALE	PROJECT 0095-076-299	SHEET NO. 2A(2)

7/11/2022 4589300100201(3).DGN
9:04:43 AM Plotted By: Jlopez-ornelas

LIMITED ACCESS HIGHWAY

By Resolution of the Highway Commission dated October 4, 1956.
By Resolution of the Highway Commission dated January 18, 1973.
By Resolution of the Commonwealth Transportation Board dated April 19, 2022

PROJECT MANAGER Rimpal Shah, P.E. (703) 259-2362 (NOVA District) _____
SURVEYED BY, DATE H&B Surveying and Mapping, LLC (804) 330-3781, 03/09/2021
DESIGN BY Whitman, Requardt, & Associates, LLP (804) 212-8700 _____.
SUBSURFACE UTILITY BY, DATE Accumark, Inc. (804) 550-2740, 07/07/2021

TYPICAL SECTIONS

COMMONWEALTH OF VIRGINIA
JEFFREY S. BASFORD
Lic. No. 043143
PROFESSIONAL ENGINEER

Jeffrey S Basford
2022.07.15 15:53:18 -04'00'

Whitman, Requardt & Associates
Baltimore, Maryland
MATERIALS ENGINEER

COMMONWEALTH OF VIRGINIA
MITCHELL F. JOHNSON
Lic. No. 023838
PROFESSIONAL ENGINEER

Mitchell F Johnson
2022.07.13 19:39:54 -04'00'

Whitman, Requardt & Associates
Richmond, Virginia
ROADWAY ENGINEER

REVISED	STATE	STATE ROUTE	STATE PROJECT	SHEET NO.
	VA.	95	0095-076-299,C-501	2A(3)

DESIGN FEATURES RELATING TO CONSTRUCTION OR TO REGULATION AND CONTROL OF TRAFFIC MAY BE SUBJECT TO CHANGE AS DEEMED NECESSARY BY THE DEPARTMENT

RAMP DBSR

STA. 25+46.05 TO STA. 26+77.50

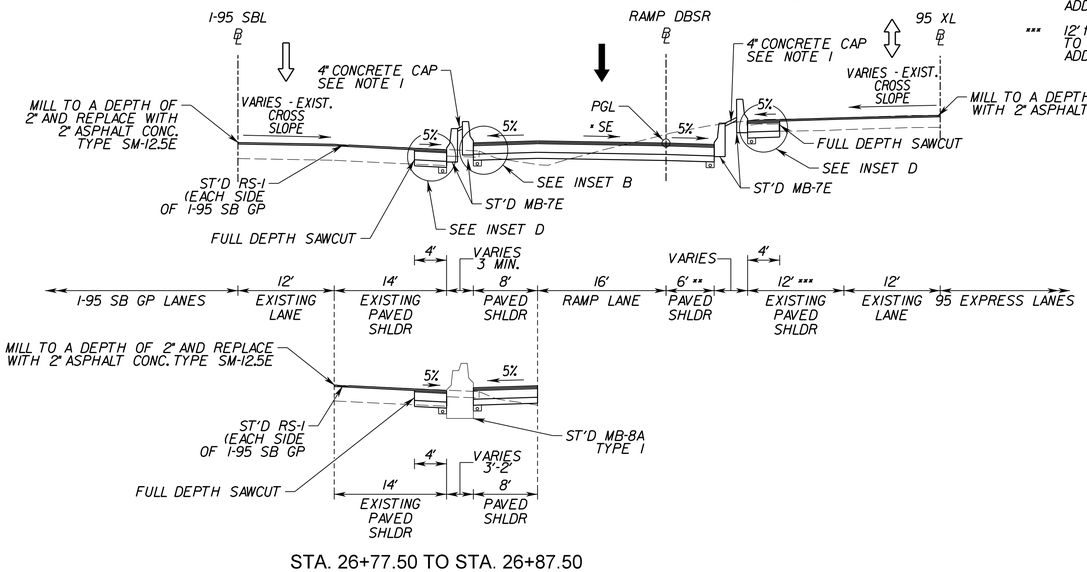

STA. 26+77.50 TO STA. 26+87.50

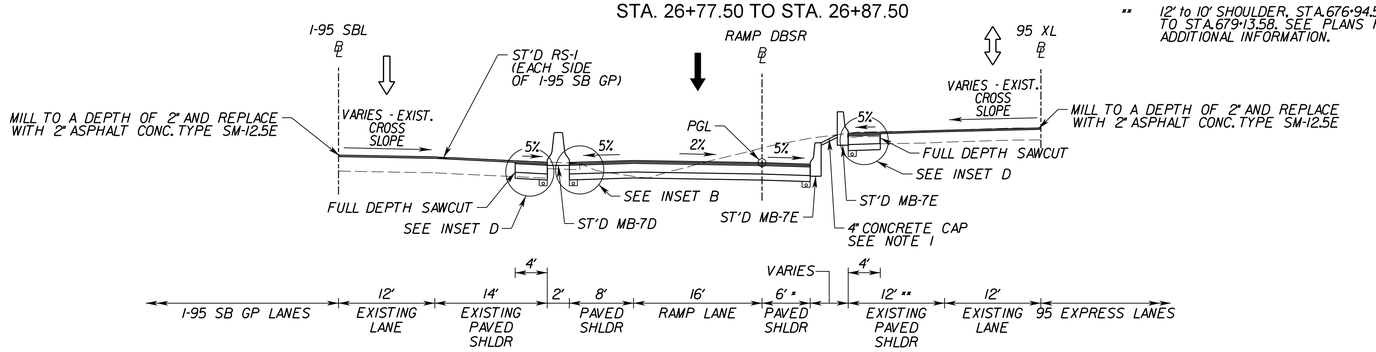

* SEE SHEET 5A FOR SUPERELEVATION TANSITION

** 6' to 4' SHOULDER, STA.26+68.02 TO STA.28+87.00. SEE PLANS FOR ADDITIONAL INFORMATION.

*** 12' to 10' SHOULDER, STA.676+94.58 TO STA.679+13.58. SEE PLANS FOR ADDITIONAL INFORMATION.

* 6' to 4' SHOULDER, STA.26+68.02 TO STA.28+87.00. SEE PLANS FOR ADDITIONAL INFORMATION.

** 12' to 10' SHOULDER, STA.676+94.58 TO STA.679+13.58. SEE PLANS FOR ADDITIONAL INFORMATION.

INSET B

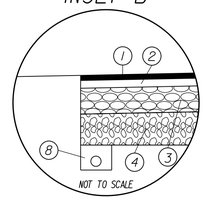

NOT TO SCALE

INSET D

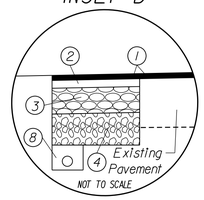

NOT TO SCALE

Pavement Legend

(1) Asphalt Concrete Surface Course, Type SM-12.5E - 2 Inch Depth
(2) Asphalt Concrete Intermediate Course, Type 19.0D - 2 Inch Depth
(3) Asphalt Concrete Base Course, Type BM-25.0A - 11 Inch Depth
(4) Aggregate Base Material, Type I, Size No. 21 B - 15 Inch Depth
(5) Asphalt Concrete Surface Course, Type SM-9.5D - 2 Inch Depth
(6) Asphalt Concrete Base Course, Type BM-25.0A - 8 Inch Depth
(7) Aggregate Base Material, Type I, Size No. 21 B - 6 Inch Depth (For Opitz Blvd. widening on the high side of exist. pavement, 6" 21B will be replaced with 6" CTA base, in accordance with VDOT Special Provision for cement treated aggregate (CTA base.
(8) ST'D UD-4 Underdrain
(9) Aggregate Base Material, Type I, Size No. 21 B - 4 Inch Depth
(10) Hydraulic Cement Conc. Sidewalk, Class A3 - 4 Inch Depth
(11) Asphalt Concrete Intermediate Course, Type 19.0A - 2 Inch Depth

NOTES:
1. MEDIAN BARRIER SHALL BE ST'D MB-7E WHERE DISTANCE BETWEEN BACK OF BARRIERS IS LESS THAN OR EQUAL TO 8'. MEDIAN BARRIER SHALL BE ST'D MB-7F WHERE DISTANCE BETWEEN BACK OF BARRIERS IS GREATER THAN 8', AND WILL HAVE 4" CONCRETE CAP (2% MIN SLOPE, 50% MAX SLOPE). AREA BETWEEN BARRIERS SHALL BE BACKFILLED WITH COARSE AGGREGATE BACKFILL PER ST'D MB-7E AND GRADED TO DRAIN. CAP SHALL INCLUDE * 5X8" DOWELLS @ 30" C-C PER ST'D MB-7E.
2. PAVEMENT WIDENING SHALL BE IN ACCORDANCE WITH VDOT STANDARD WP-2.
3. EXISTING UD-4 WITHIN WIDENING AREA SHALL BE DEMOLISHED AND REPLACED.

AFC PLANS

NOT TO SCALE	PROJECT 0095-076-299	SHEET NO. 2A(3)

LIMITED ACCESS HIGHWAY

By Resolution of the Highway Commission dated October 4, 1956.
By Resolution of the Highway Commission dated January 18, 1973.
By Resolution of the Commonwealth Transportation Board dated April 19, 2022

PROJECT MANAGER Rimpal Shah, P.E. (703) 259-2362 (NOVA District) _____
SURVEYED BY, DATE B&B Surveying and Mapping, LLC (804) 330-3781, 03/09/2021
DESIGN BY Whitman, Requardt, & Associates, LLP (804) 212-8700 _____.
SUBSURFACE UTILITY BY, DATE Accumark, Inc. (804) 550-2740, 07/07/2021

TYPICAL SECTIONS

COMMONWEALTH OF VIRGINIA
MITCHELL F. JOHNSON
Lic. No. 023838
PROFESSIONAL ENGINEER

Mitchell F Johnson
2022.07.13 19:40:14 -04'00'

Whitman, Requardt & Associates	Whitman, Requardt & Associates
Baltimore, Maryland	Richmond, Virginia
MATERIALS ENGINEER	ROADWAY ENGINEER

REVISED	STATE	STATE ROUTE	STATE PROJECT	SHEET NO.
	VA.	95	0095-076-299,C-501	2A(4)

DESIGN FEATURES RELATING TO CONSTRUCTION OR TO REGULATION AND CONTROL OF TRAFFIC MAY BE SUBJECT TO CHANGE AS DEEMED NECESSARY BY THE DEPARTMENT

* SEE SHEET 2B(2-3) FOR GORE DETAILS

** SEE SHEET 5A FOR SHOULDER TRANSITION

RAMP DBSR

STA. 26+87.50 TO STA. 33+58.97

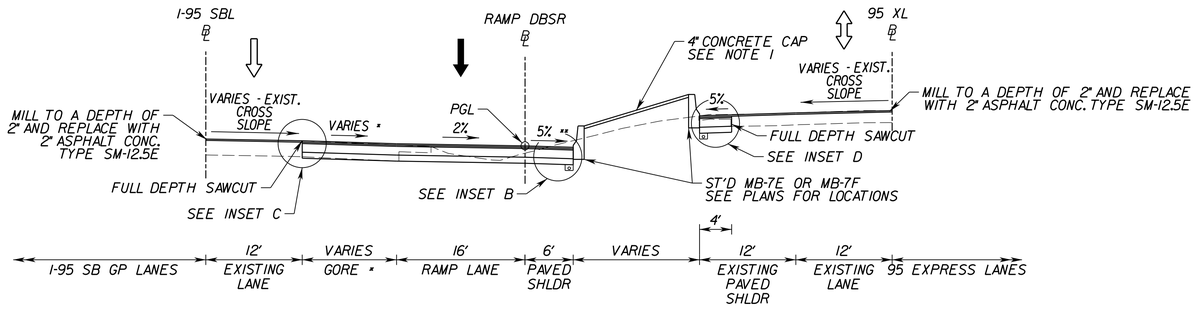

* SEE SHEET 2B(2-3) FOR GORE DETAILS

RAMP DBSR

STA. 33+58.97 TO STA. 34+00.18

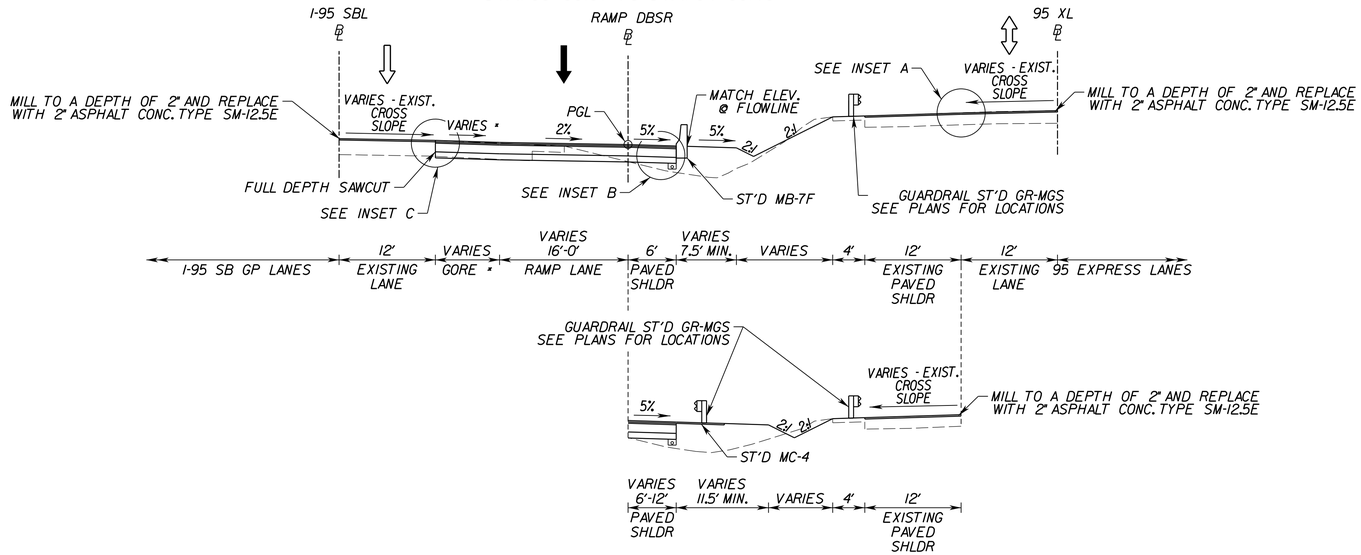

STA. 34+00.18 TO STA. 44+10.49

INSET A

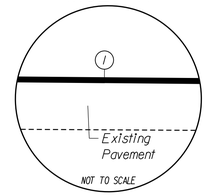

INSET B

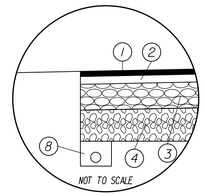

INSET C

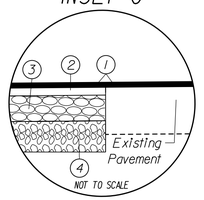

INSET D

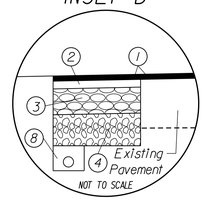

Pavement Legend

1. Asphalt Concrete Surface Course, Type SM-12.5E - 2 Inch Depth
2. Asphalt Concrete Intermediate Course, Type 19.0D - 2 Inch Depth
3. Asphalt Concrete Base Course, Type BM-25.0A - 11 Inch Depth
4. Aggregate Base Material, Type 1, Size No. 21 B - 15 Inch Depth
5. Asphalt Concrete Surface Course, Type SM-9.5D - 2 Inch Depth
6. Asphalt Concrete Base Course, Type BM-25.0A - 8 Inch Depth
7. Aggregate Base Material, Type 1, Size No. 21 B - 6 Inch Depth (For Opitz Blvd. widening on the high side of exist. pavement, 6" 21B will be replaced with 6" CTA base. In accordance with VDOT Special Provision for cement treated aggregate (CTA base.
8. ST'D UD-4 Underdrain
9. Aggregate Base Material, Type 1, Size No. 21 B - 4 Inch Depth
10. Hydraulic Cement Conc. Sidewalk, Class A3 - 4 Inch Depth
11. Asphalt Concrete Intermediate Course, Type 19.0A - 2 Inch Depth

NOTES:

1. MEDIAN BARRIER SHALL BE ST'D MB-7E WHERE DISTANCE BETWEEN BACK OF BARRIERS IS LESS THAN OR EQUAL TO 8'. MEDIAN BARRIER SHALL BE ST'D MB-7F WHERE DISTANCE BETWEEN BACK OF BARRIERS IS GREATER THAN 8', AND WILL HAVE 4" CONCRETE CAP (2% MIN SLOPE, 50% MAX SLOPE). AREA BETWEEN BARRIERS SHALL BE BACKFILLED WITH COARSE AGGREGATE BACKFILL PER ST'D MB-7E AND GRADED TO DRAIN. CAP SHALL INCLUDE * 5X8" DOWELLS @ 30" C-C PER ST'D MB-7E.
2. PAVEMENT WIDENING SHALL BE IN ACCORDANCE WITH VDOT STANDARD WP-2.
3. EXISTING UD-4 WITHIN WIDENING AREA SHALL BE DEMOLISHED AND REPLACED.

AFC PLANS

NOT TO SCALE	PROJECT 0095-076-299	SHEET NO. 2A(4)

LIMITED ACCESS HIGHWAY

By Resolution of the Highway Commission dated October 4, 1956.
By Resolution of the Highway Commission dated January 18, 1973.
By Resolution of the Commonwealth Transportation Board dated April 19, 2022

PROJECT MANAGER Rimpal Shah, P.E. (703) 259-2362 (NOVA District) _____
SURVEYED BY, DATE H&B Surveying and Mapping, LLC (804) 330-3781, 03/09/2021
DESIGN BY Whitman, Requardt, & Associates, LLP (804) 212-8700 _____
SUBSURFACE UTILITY BY, DATE Accumark, Inc. (804) 550-2740, 07/07/2021

TYPICAL SECTIONS

REVISED	STATE	STATE ROUTE	STATE PROJECT	SHEET NO.
	VA.	95	0095-076-299,C-501	2A(5)

DESIGN FEATURES RELATING TO CONSTRUCTION OR TO REGULATION AND CONTROL OF TRAFFIC MAY BE SUBJECT TO CHANGE AS DEEMED NECESSARY BY THE DEPARTMENT

COMMONWEALTH OF VIRGINIA JEFFREY S. BASFORD Lic. No. 043143 PROFESSIONAL ENGINEER	COMMONWEALTH OF VIRGINIA MITCHELL F. JOHNSON Lic. No. 023838 PROFESSIONAL ENGINEER
Jeffrey S Basford 2022.07.15 15:59:54 -04'00'	Mitchell F Johnson 2022.07.13 19:40:34 -04'00'
Whitman, Requardt & Associates Baltimore, Maryland MATERIALS ENGINEER	Whitman, Requardt & Associates Richmond, Virginia ROADWAY ENGINEER

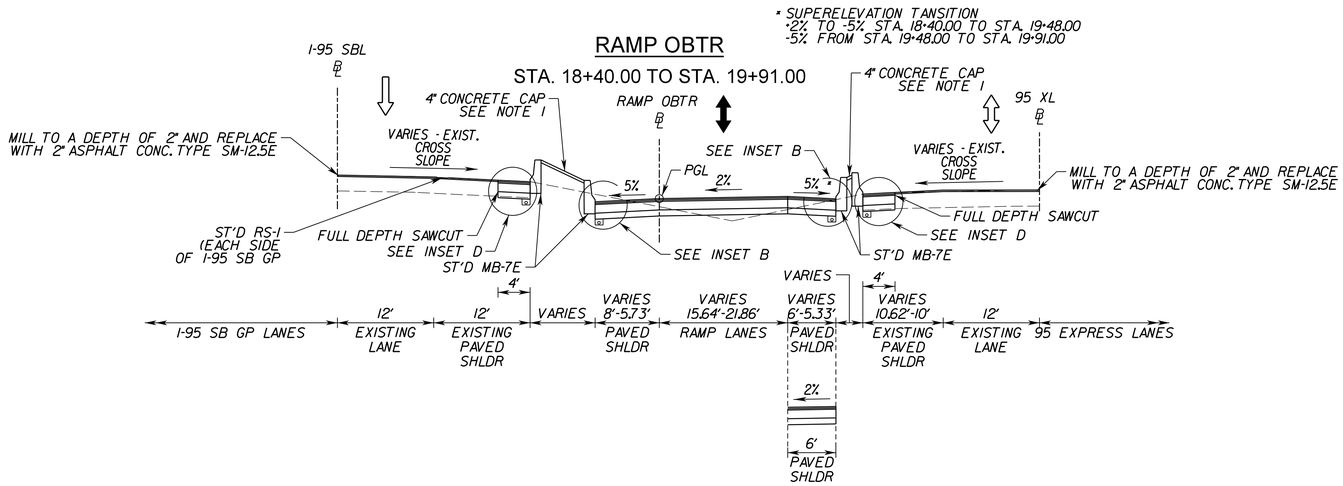

STA. 17+30.00 TO STA. 18+40.00

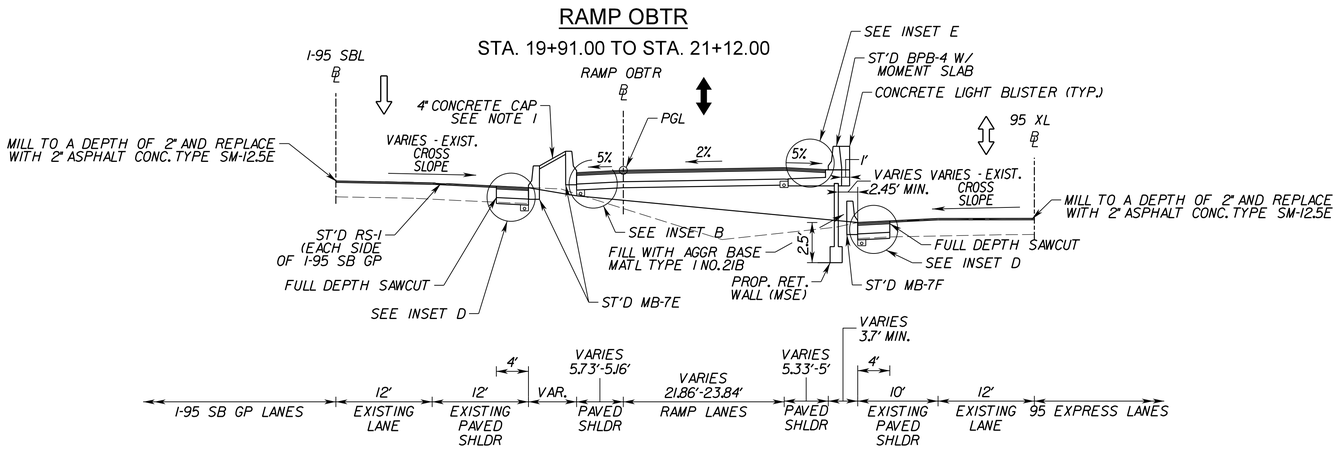

INSET B

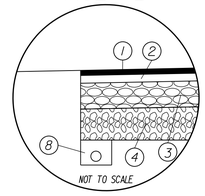

INSET D

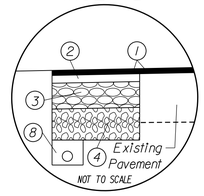

INSET E

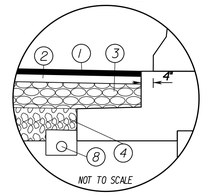

Pavement Legend

1. Asphalt Concrete Surface Course, Type SM-12.5E - 2 Inch Depth
2. Asphalt Concrete Intermediate Course, Type 19.0D - 2 Inch Depth
3. Asphalt Concrete Base Course, Type BM-25.0A - 11 Inch Depth
4. Aggregate Base Material, Type I, Size No. 21 B - 15 Inch Depth
5. Asphalt Concrete Surface Course, Type SM-9.5D - 2 Inch Depth
6. Asphalt Concrete Base Course, Type BM-25.0A - 8 Inch Depth
7. Aggregate Base Material, Type I, Size No. 21 B - 6 Inch Depth (For Opitz Blvd. widening on the high side of exist. pavement, 6" 21B will be replaced with 6" CTA base, in accordance with VDOT Special Provision for cement treated aggregate (CTA base.
8. ST'D UD-4 Underdrain
9. Aggregate Base Material, Type I, Size No. 21 B - 4 Inch Depth
10. Hydraulic Cement Conc. Sidewalk, Class A3 - 4 Inch Depth
11. Asphalt Concrete Intermediate Course, Type 19.0A - 2 Inch Depth

NOTES:
1. MEDIAN BARRIER SHALL BE ST'D MB-7E WHERE DISTANCE BETWEEN BACK OF BARRIERS IS LESS THAN OR EQUAL TO 8'. MEDIAN BARRIER SHALL BE ST'D MB-7F WHERE DISTANCE BETWEEN BACK OF BARRIERS IS GREATER THAN 8', AND WILL HAVE 4" CONCRETE CAP (2% MIN SLOPE, 50% MAX SLOPE). AREA BETWEEN BARRIERS SHALL BE BACKFILLED WITH COARSE AGGREGATE BACKFILL PER ST'D MB-7E AND GRADED TO DRAIN. CAP SHALL INCLUDE * 5X8" DOWELLS @ 30" C-C PER ST'D MB-7E.
2. PAVEMENT WIDENING SHALL BE IN ACCORDANCE WITH VDOT STANDARD WP-2.
3. EXISTING UD-4 WITHIN WIDENING AREA SHALL BE DEMOLISHED AND REPLACED.

AFC PLANS

NOT TO SCALE	PROJECT 0095-076-299	SHEET NO. 2A(5)

LIMITED ACCESS HIGHWAY

By Resolution of the Highway Commission dated October 4, 1956.
By Resolution of the Highway Commission dated January 18, 1973.
By Resolution of the Commonwealth Transportation Board dated April 19, 2022

PROJECT MANAGER Rimpal Shah, P.E. (703) 259-2362 (NOVA District) _____
SURVEYED BY, DATE B&B Surveying and Mapping, LLC (804) 330-3781, 03/09/2021
DESIGN BY Whitman, Requardt, & Associates, LLP (804) 212-8700 _____
SUBSURFACE UTILITY BY, DATE Accumark, Inc. (804) 550-7740, 07/07/2021

TYPICAL SECTIONS

COMMONWEALTH OF VIRGINIA
JEFFREY S. BASFORD
Lic. No. 043143
PROFESSIONAL ENGINEER

Jeffrey S Basford
2022.07.15 16:40:25 -04'00'

Whitman, Requardt & Associates
Baltimore, Maryland
MATERIALS ENGINEER

COMMONWEALTH OF VIRGINIA
MITCHELL F. JOHNSON
Lic. No. 023838
PROFESSIONAL ENGINEER

Mitchell F Johnson
2022.07.18 07:59:18 -04'00'

Whitman, Requardt & Associates
Richmond, Virginia
ROADWAY ENGINEER

REVISED	STATE	STATE ROUTE	STATE PROJECT	SHEET NO.
	VA.	95	0095-076-299,C-501	2A(6)

DESIGN FEATURES RELATING TO CONSTRUCTION OR TO REGULATION AND CONTROL OF TRAFFIC MAY BE SUBJECT TO CHANGE AS DEEMED NECESSARY BY THE DEPARTMENT

RAMP OBTR
STA. 21+12.00 TO STA. 22+00.00

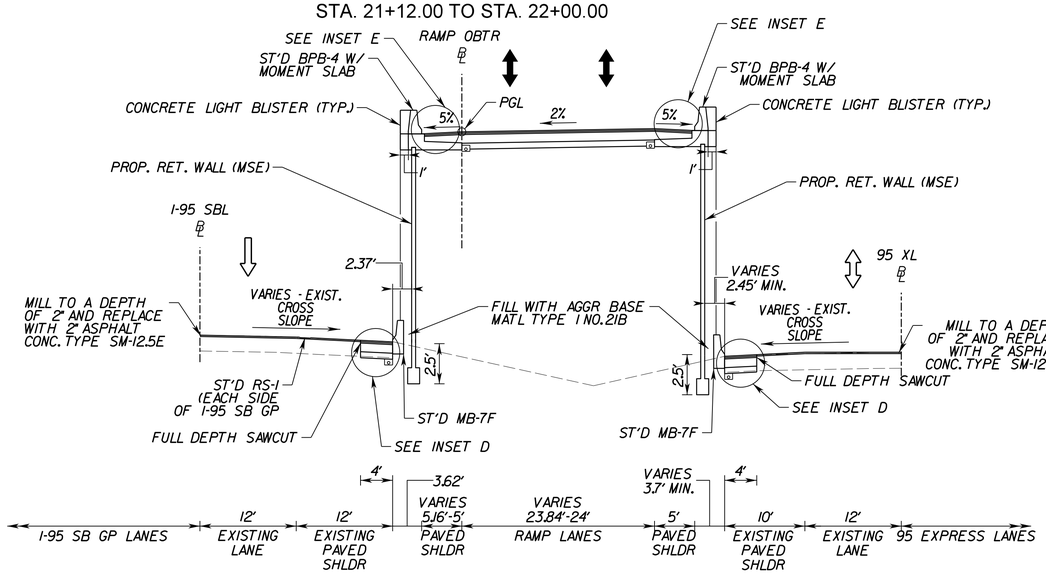

RAMP OBTR
STA. 22+00.00 TO STA. 27+10.43

* SUPERELEVATION TRANSITION -2% TO -2% STA. 22+00.00 TO STA. 22+96.00

** SUPERELEVATION TRANSITION -5% TO -2% STA. 26+79.93 TO STA. 27+09.93

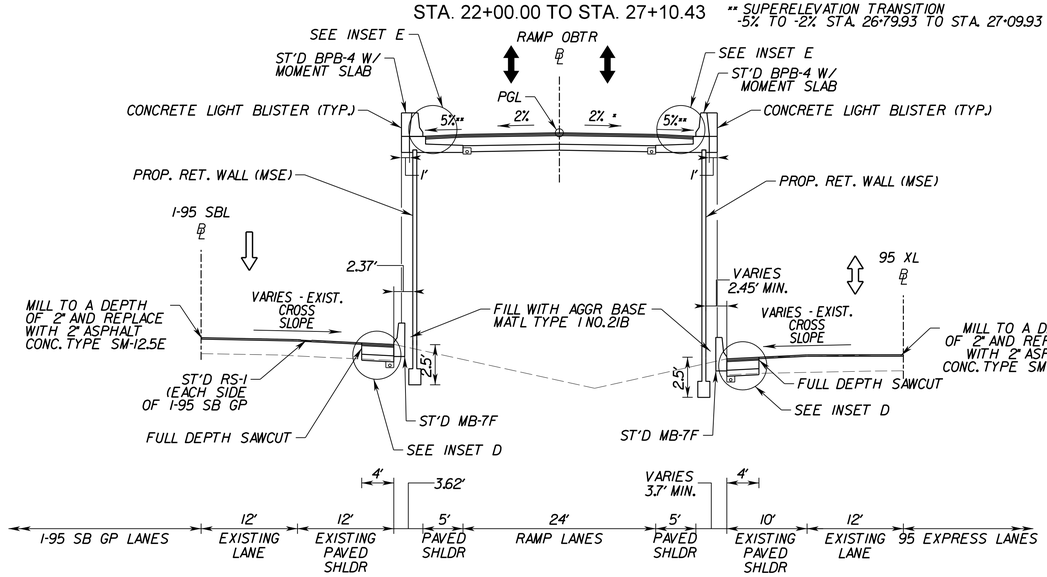

INSET D

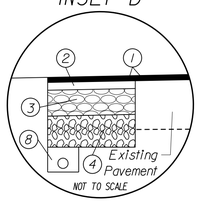

INSET E

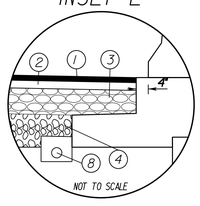

NOTES:
1. PAVEMENT WIDENING SHALL BE IN ACCORDANCE WITH VDOT STANDARD WP-2.

Pavement Legend

(1) Asphalt Concrete Surface Course, Type SM-12.5E - 2 Inch Depth
(2) Asphalt Concrete Intermediate Course, Type 19.0D - 2 Inch Depth
(3) Asphalt Concrete Base Course, Type BM-25.0A - 11 Inch Depth
(4) Aggregate Base Material, Type I, Size No.21B - 15 Inch Depth
(5) Asphalt Concrete Surface Course, Type SM-9.5D - 2 Inch Depth
(6) Asphalt Concrete Base Course, Type BM-25.0A - 8 Inch Depth
(7) Aggregate Base Material, Type I, Size No.21B - 6 Inch Depth (For Opitz Blvd. widening on the high side of exist. pavement, 6" 21B will be replaced with 6" CTA base, in accordance with VDOT Special Provision for cement treated aggregate (CTA base.
(8) ST'D UD-4 Underdrain
(9) Aggregate Base Material, Type I, Size No.21B - 4 Inch Depth
(10) Hydraulic Cement Conc. Sidewalk, Class A3 - 4 Inch Depth
(11) Asphalt Concrete Intermediate Course, Type 19.0A - 2 Inch Depth

AFC PLANS

NOT TO SCALE	PROJECT 0095-076-299	SHEET NO. 2A(6)

LIMITED ACCESS HIGHWAY

By Resolution of the Highway Commission dated October 4, 1956.
By Resolution of the Highway Commission dated January 18, 1973.
By Resolution of the Commonwealth Transportation Board dated April 19, 2022

PROJECT MANAGER: Rimpal Shah, P.E. (703) 259-2362 (NOVA District)
SURVEYED BY, DATE: H&B Surveying and Mapping, LLC (804) 330-3781, 03/09/2021
DESIGN BY: Whitman, Requardt, & Associates, LLP (804) 212-8700
SUBSURFACE UTILITY BY, DATE: Accumark, Inc. (804) 550-7740, 07/07/2021

TYPICAL SECTIONS

JEFFREY S. BASFORD Lic. No. 043143	MITCHELL F. JOHNSON Lic. No. 023838
Jeffrey S Basford 2022.07.15 16:04:17 -04'00'	Mitchell F Johnson 2022.07.13 19:40:53 -04'00'
Whitman, Requardt & Associates Baltimore, Maryland MATERIALS ENGINEER	Whitman, Requardt & Associates Richmond, Virginia ROADWAY ENGINEER

REVISED	STATE	STATE ROUTE	STATE PROJECT	SHEET NO.
	VA.	95	0095-076-299,C-501	2A(7)

DESIGN FEATURES RELATING TO CONSTRUCTION OR TO REGULATION AND CONTROL OF TRAFFIC MAY BE SUBJECT TO CHANGE AS DEEMED NECESSARY BY THE DEPARTMENT

OPITZ BLVD.

STA. 60+25.00 TO STA. 63+12.91

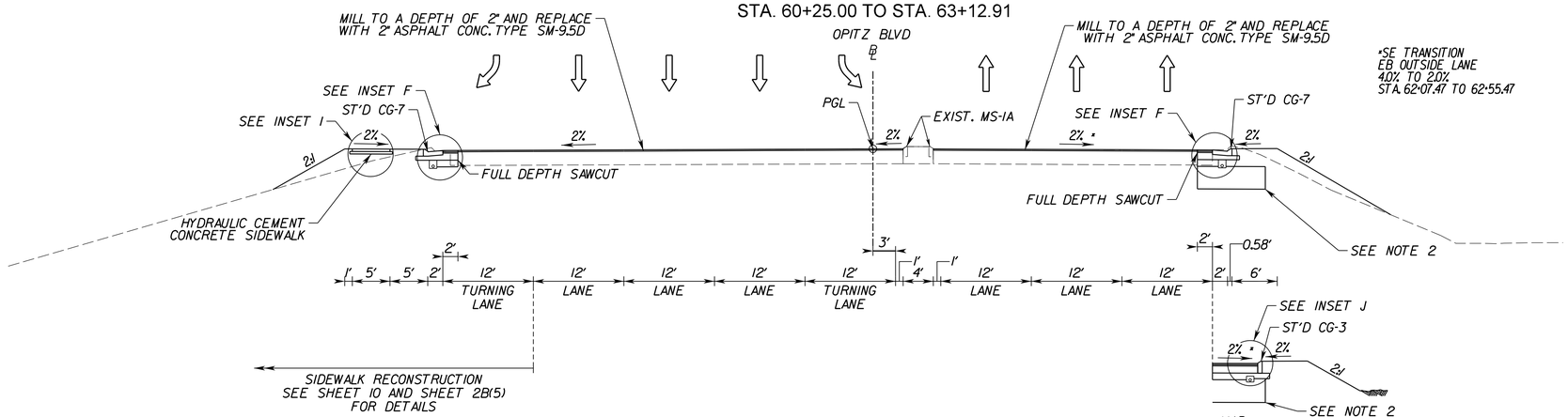

STA. 60+30.21 TO STA. 60+65.82

STA. 61+82.47 TO STA. 62+30.74

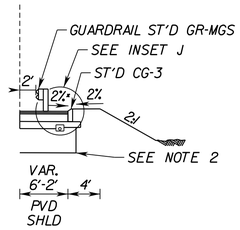

STA. 62+30.74 TO STA. 62+82.47

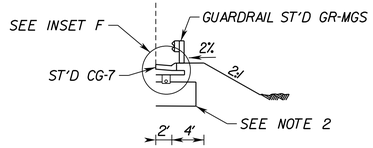

STA. 62+82.47 TO STA. 63+12.91

Pavement Legend

1. Asphalt Concrete Surface Course, Type SM-12.5E - 2 Inch Depth
2. Asphalt Concrete Intermediate Course, Type 19.0D - 2 Inch Depth
3. Asphalt Concrete Base Course, Type BM-25.0A - 11 Inch Depth
4. Aggregate Base Material, Type I, Size No. 21B - 15 Inch Depth
5. Asphalt Concrete Surface Course, Type SM-9.5D - 2 Inch Depth
6. Asphalt Concrete Base Course, Type BM-25.0A - 8 Inch Depth
7. Aggregate Base Material, Type I, Size No. 21B - 6 Inch Depth (For Opitz Blvd. widening on the high side of exist. pavement, 6" 21B will be replaced with 6" CTA base, in accordance with VDOT Special Provision for cement treated aggregate (CTA base.
8. ST'D UD-4 Underdrain
9. Aggregate Base Material, Type I, Size No. 21B - 4 Inch Depth
10. Hydraulic Cement Conc. Sidewalk, Class A3 - 4 Inch Depth
11. Asphalt Concrete Intermediate Course, Type 19.0A - 2 Inch Depth

INSET F

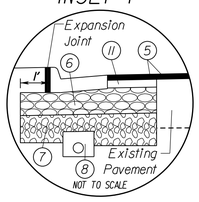

INSET I

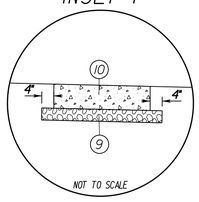

INSET J

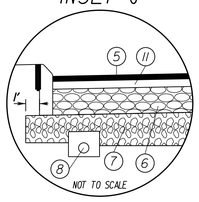

NOTES:
1. PAVEMENT WIDENING SHALL BE IN ACCORDANCE WITH VDOT STANDARD WP-2.
2. UNDERCUT UNSUITABLE CH MATERIAL TO A DEPTH OF 3' AND REPLACE WITH A SELECT I CBR 30 MATERIAL SEE TABLE 10.5 IN GEOTECH REPORT FOR MORE DETAILS.

AFC PLANS

NOT TO SCALE	PROJECT 0095-076-299	SHEET NO. 2A(7)

LIMITED ACCESS HIGHWAY

By Resolution of the Highway Commission dated October 4, 1956.
By Resolution of the Highway Commission dated January 18, 1973.
By Resolution of the Commonwealth Transportation Board dated April 19, 2022

PROJECT MANAGER: Rimpal Shah, P.E. (703) 259-2362 (NOVA District) _____
SURVEYED BY, DATE: B&B Surveying and Mapping, LLC (804) 330-3781, 03/09/2021
DESIGN BY: Whitman, Requardt, & Associates, LLP (804) 212-8700 _____
SUBSURFACE UTILITY BY, DATE: Accumark, Inc. (804) 550-2740, 07/07/2021

TYPICAL SECTIONS

COMMONWEALTH OF VIRGINIA — JEFFREY S. BASFORD — Lic. No. 043143 — PROFESSIONAL ENGINEER
Jeffrey S Basford
2022.07.15 16:07:51 -04'00'
Whitman, Requardt & Associates
Baltimore, Maryland
MATERIALS ENGINEER

COMMONWEALTH OF VIRGINIA — MITCHELL F. JOHNSON — Lic. No. 023838 — PROFESSIONAL ENGINEER
Mitchell F Johnson
2022.07.13 19:41:13 -04'00'
Whitman, Requardt & Associates
Richmond, Virginia
ROADWAY ENGINEER

REVISED	STATE	STATE ROUTE	STATE PROJECT	SHEET NO.
	VA.	95	0095-076-299,C-501	2A(8)

DESIGN FEATURES RELATING TO CONSTRUCTION OR TO REGULATION AND CONTROL OF TRAFFIC MAY BE SUBJECT TO CHANGE AS DEEMED NECESSARY BY THE DEPARTMENT

OPITZ BLVD.

STA. 63+12.91 TO STA. 64+65.00

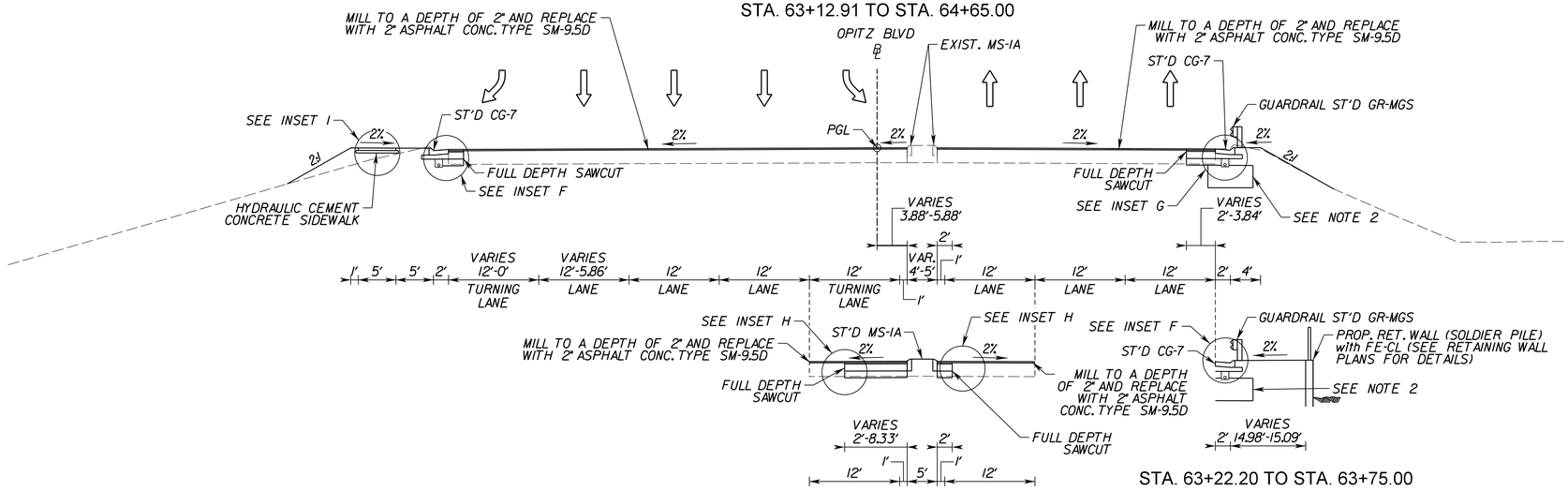

STA. 63+60.95 TO STA. 64+65.00

STA. 63+22.20 TO STA. 63+75.00

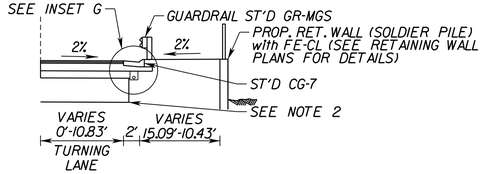

STA. 63+75.00 TO STA. 64+65.00

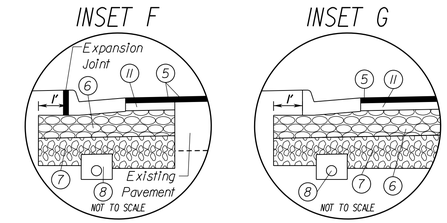

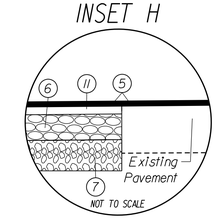

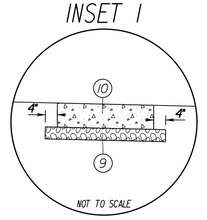

* BRIDGE APPROACH SLAB FROM STA. 65+15.00 TO STA. 65+35.17 SEE PROJECT 0095-076-299,B-688 FOR MORE DETAILS

OPITZ BLVD.

STA. 64+65.00 TO STA. 65+15.00 *

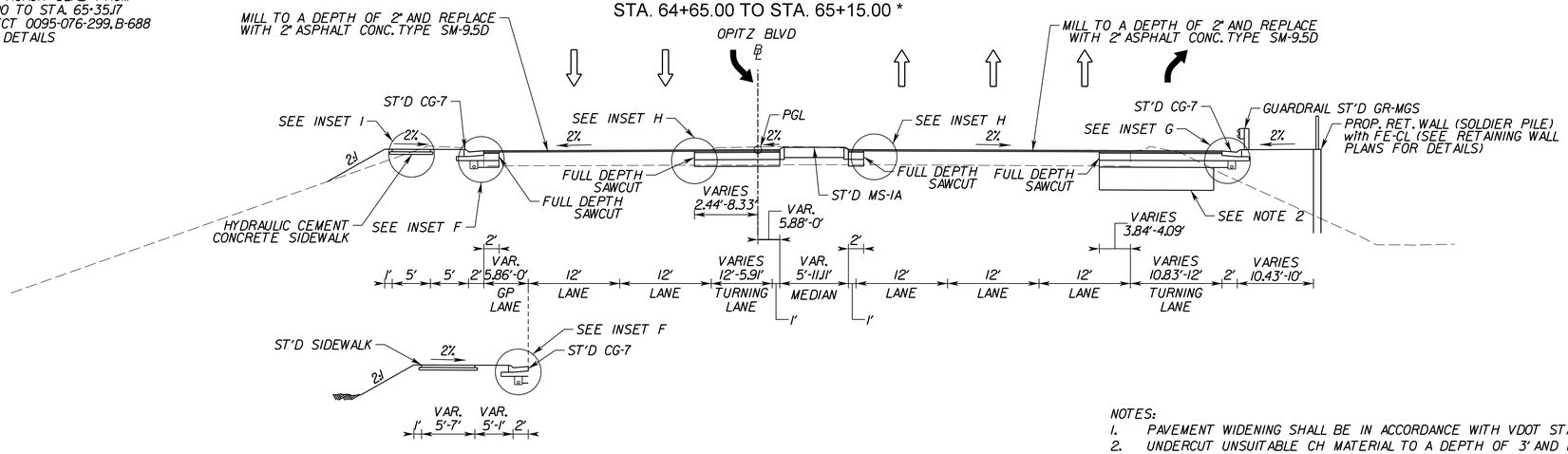

STA. 65+00.86 TO STA. 65+15+00

Pavement Legend

1. Asphalt Concrete Surface Course, Type SM-12.5E - 2 Inch Depth
2. Asphalt Concrete Intermediate Course, Type 19.0D - 2 Inch Depth
3. Asphalt Concrete Base Course, Type BM-25.0A - 11 Inch Depth
4. Aggregate Base Material, Type I, Size No. 21 B - 15 Inch Depth
5. Asphalt Concrete Surface Course, Type SM-9.5D - 2 Inch Depth
6. Asphalt Concrete Base Course, Type BM-25.0A - 8 Inch Depth
7. Aggregate Base Material, Type I, Size No. 21 B - 6 Inch Depth (For Opitz Blvd. widening on the high side of exist. pavement, 6" 21B will be replaced with 6" CTA base. In accordance with VDOT Special Provision for cement treated aggregate (CTA base.
8. ST'D UD-4 Underdrain
9. Aggregate Base Material, Type I, Size No. 21 B - 4 Inch Depth
10. Hydraulic Cement Conc. Sidewalk, Class A3 - 4 Inch Depth
11. Asphalt Concrete Intermediate Course, Type 19.0A - 2 Inch Depth

AFC PLANS

NOTES:
1. PAVEMENT WIDENING SHALL BE IN ACCORDANCE WITH VDOT STANDARD WP-2.
2. UNDERCUT UNSUITABLE CH MATERIAL TO A DEPTH OF 3' AND REPLACE WITH A SELECT ICBR 30 MATERIAL SEE TABLE 10.5 IN GEOTECH REPORT FOR MORE DETAILS.

NOT TO SCALE	PROJECT	SHEET NO.
	0095-076-299	2A(8)

7/11/2022 4589300100201(9).DGN
9:06:22 AM Plotted By: jlopez-ornelas

LIMITED ACCESS HIGHWAY

By Resolution of the Highway Commission dated October 4, 1956.
By Resolution of the Highway Commission dated January 18, 1973.
By Resolution of the Commonwealth Transportation Board dated April 19, 2022

PROJECT MANAGER: Rimpal Shah, P.E. (703) 259-2362 (NOVA District) _____
SURVEYED BY, DATE: B&B Surveying and Mapping, LLC (804) 330-3781, 03/09/2021
DESIGN BY: Whitman, Requardt, & Associates, LLP (804) 212-8700 _____
SUBSURFACE UTILITY BY, DATE: Accumark, Inc. (804) 550-2740, 07/07/2021

TYPICAL SECTIONS

REVISED	STATE	STATE ROUTE	STATE PROJECT	SHEET NO.
	VA.	95	0095-076-299,C-501	2A(9)

DESIGN FEATURES RELATING TO CONSTRUCTION OR TO REGULATION AND CONTROL OF TRAFFIC MAY BE SUBJECT TO CHANGE AS DEEMED NECESSARY BY THE DEPARTMENT

COMMONWEALTH OF VIRGINIA — JEFFREY S. BASFORD, Lic. No. 043143 — PROFESSIONAL ENGINEER	COMMONWEALTH OF VIRGINIA — MITCHELL F. JOHNSON, Lic. No. 023838 — PROFESSIONAL ENGINEER
Jeffrey S Basford 2022.07.15 16:10:36 -04'00'	Mitchell F Johnson 2022.07.13 19:41:38 -04'00'
Whitman, Requardt & Associates Baltimore, Maryland MATERIALS ENGINEER	Whitman, Requardt & Associates Richmond, Virginia ROADWAY ENGINEER

* BRIDGE APPROACH SLAB FROM STA. 70+05.65 TO STA. 70+25.86 SEE PROJECT 095-076-299,B-688 FOR MORE DETAILS

OPITZ BLVD.

STA. 70+25.86 TO STA. 71+00.00 *

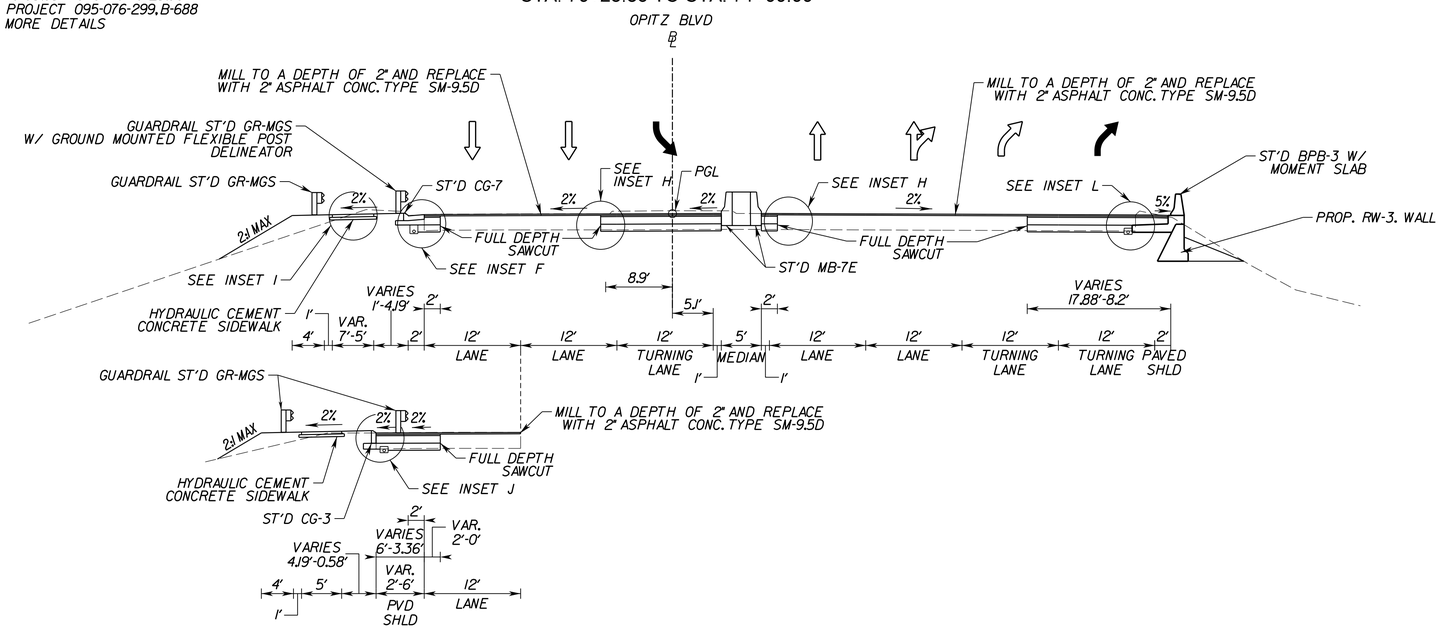

STA. 70+69.34 TO STA. 71+00.00

INSET F

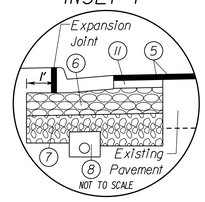

INSET H

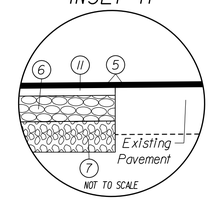

INSET I

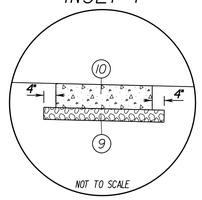

INSET J

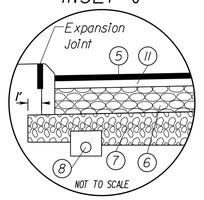

INSET L

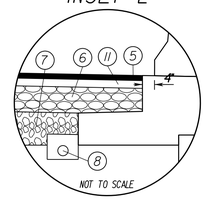

Pavement Legend

(1) Asphalt Concrete Surface Course, Type SM-12.5E - 2 Inch Depth
(2) Asphalt Concrete Intermediate Course, Type 19.0D - 2 Inch Depth
(3) Asphalt Concrete Base Course, Type BM-25.0A - 11 Inch Depth
(4) Aggregate Base Material, Type I, Size No. 21 B - 15 Inch Depth
(5) Asphalt Concrete Surface Course, Type SM-9.5D - 2 Inch Depth
(6) Asphalt Concrete Base Course, Type BM-25.0A - 8 Inch Depth
(7) Aggregate Base Material, Type I, Size No. 21 B - 6 Inch Depth (For Opitz Blvd. widening on the high side of exist. pavement, 6" 21B will be replaced with 6" CTA base, in accordance with VDOT Special Provision for cement treated aggregate (CTA base.
(8) ST'D UD-4 Underdrain
(9) Aggregate Base Material, Type I, Size No. 21 B - 4 Inch Depth
(10) Hydraulic Cement Conc. Sidewalk, Class A3 - 4 Inch Depth
(11) Asphalt Concrete Intermediate Course, Type 19.0A - 2 Inch Depth

AFC PLANS

NOTES:
1. PAVEMENT WIDENING SHALL BE IN ACCORDANCE WITH VDOT STANDARD WP-2.

NOT TO SCALE	PROJECT 0095-076-299	SHEET NO. 2A(9)

LIMITED ACCESS HIGHWAY

By Resolution of the Highway Commission dated October 4, 1956.
By Resolution of the Highway Commission dated January 18, 1973.
By Resolution of the Commonwealth Transportation Board dated April 19, 2022

PROJECT MANAGER Rimpal Shah, P.E. (703) 259-2362 (NOVA District) _____
SURVEYED BY, DATE B&B Surveying and Mapping, LLC (804) 330-3781, 03/09/2021
DESIGN BY Whitman, Requardt, & Associates, LLP (804) 212-8700 _____
SUBSURFACE UTILITY BY, DATE Accumark, Inc. (804) 550-2740, 07/07/2021

TYPICAL SECTIONS

COMMONWEALTH OF VIRGINIA — JEFFREY S. BASFORD — Lic. No. 043143 — PROFESSIONAL ENGINEER

Jeffrey S Basford
2022.07.15 16:11:34 -04'00'
Whitman, Requardt & Associates
Baltimore, Maryland
MATERIALS ENGINEER

COMMONWEALTH OF VIRGINIA — MITCHELL F. JOHNSON — Lic. No. 023838 — PROFESSIONAL ENGINEER

Mitchell F Johnson
2022.07.13 19:41:55 -04'00'
Whitman, Requardt & Associates
Richmond, Virginia
ROADWAY ENGINEER

REVISED	STATE	STATE ROUTE	STATE PROJECT	SHEET NO.
	VA.	95	0095-076-299,C-501	2A(10)

DESIGN FEATURES RELATING TO CONSTRUCTION OR TO REGULATION AND CONTROL OF TRAFFIC MAY BE SUBJECT TO CHANGE AS DEEMED NECESSARY BY THE DEPARTMENT

OPITZ BLVD.

STA. 71+00.00 TO STA. 71+50.69

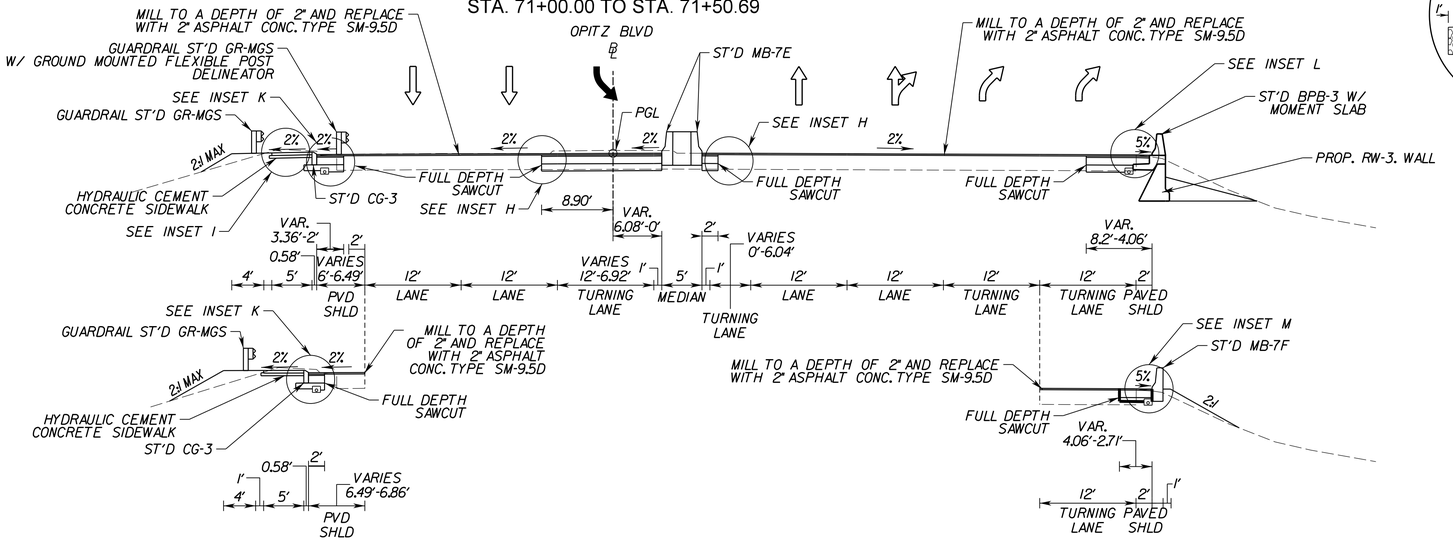

STA. 71+21.07 TO STA. 71+30.32

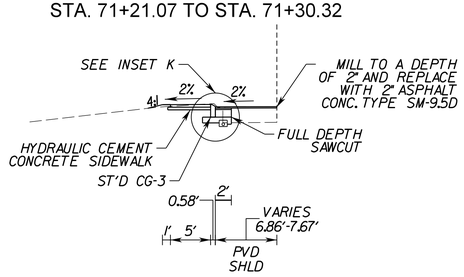

STA. 71+30.32 TO STA. 71+50.69

STA. 71+39.78 TO STA. 71+50.69

INSET K

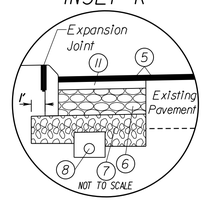

INSET H

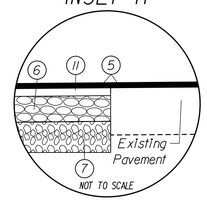

INSET I

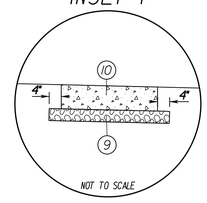

INSET M

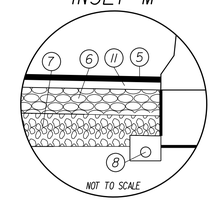

INSET L

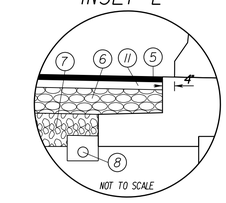

Pavement Legend

1. Asphalt Concrete Surface Course, Type SM-12.5E - 2 Inch Depth
2. Asphalt Concrete Intermediate Course, Type 19.0D - 2 Inch Depth
3. Asphalt Concrete Base Course, Type BM-25.0A - 11 Inch Depth
4. Aggregate Base Material, Type I, Size No. 21 B - 15 Inch Depth
5. Asphalt Concrete Surface Course, Type SM-9.5D - 2 Inch Depth
6. Asphalt Concrete Base Course, Type BM-25.0A - 8 Inch Depth
7. Aggregate Base Material, Type I, Size No. 21 B - 6 Inch Depth (For Opitz Blvd. widening on the high side of exist. pavement, 6" 21B will be replaced with 6" CTA base, in accordance with VDOT Special Provision for cement treated aggregate (CTA base.
8. ST'D UD-4 Underdrain
9. Aggregate Base Material, Type I, Size No. 21 B - 4 Inch Depth
10. Hydraulic Cement Conc. Sidewalk, Class A3 - 4 Inch Depth
11. Asphalt Concrete Intermediate Course, Type 19.0A - 2 Inch Depth

AFC PLANS

NOTES:
1. PAVEMENT WIDENING SHALL BE IN ACCORDANCE WITH VDOT STANDARD WP-2.

NOT TO SCALE	PROJECT 0095-076-299	SHEET NO. 2A(10)

LIMITED ACCESS HIGHWAY

By Resolution of the Highway Commission dated October 4, 1956.
By Resolution of the Highway Commission dated January 18, 1973.
By Resolution of the Commonwealth Transportation Board dated April 19, 2022

PROJECT MANAGER Rimpal Shah, P.E. (703) 259-2362 (NOVA District) _____
SURVEYED BY, DATE B&B Surveying and Mapping, LLC (804) 330-3781, 03/09/2021
DESIGN BY Whitman, Requardt, & Associates, LLP (804) 212-8700 _____
SUBSURFACE UTILITY BY, DATE Accumark, Inc. (804) 550-2740, 07/07/2021

TYPICAL SECTIONS

COMMONWEALTH OF VIRGINIA — JEFFREY S. BASFORD Lic. No. 043143 — PROFESSIONAL ENGINEER	COMMONWEALTH OF VIRGINIA — MITCHELL F. JOHNSON Lic. No. 023838 — PROFESSIONAL ENGINEER
Jeffrey S Basford 2022.07.15 16:12:44 -04'00'	Mitchell F Johnson 2022.07.13 19:42:21 -04'00'
Whitman, Requardt & Associates Baltimore, Maryland MATERIALS ENGINEER	Whitman, Requardt & Associates Richmond, Virginia ROADWAY ENGINEER

REVISED	STATE	STATE ROUTE	STATE PROJECT	SHEET NO.
	VA.	95	0095-076-299,C-501	2A(11)

DESIGN FEATURES RELATING TO CONSTRUCTION OR TO REGULATION AND CONTROL OF TRAFFIC MAY BE SUBJECT TO CHANGE AS DEEMED NECESSARY BY THE DEPARTMENT

* SEE SHEET 2B(4) FOR GORE DETAILS

OPITZ BLVD.

STA. 71+50.69 TO STA. 73+04.19

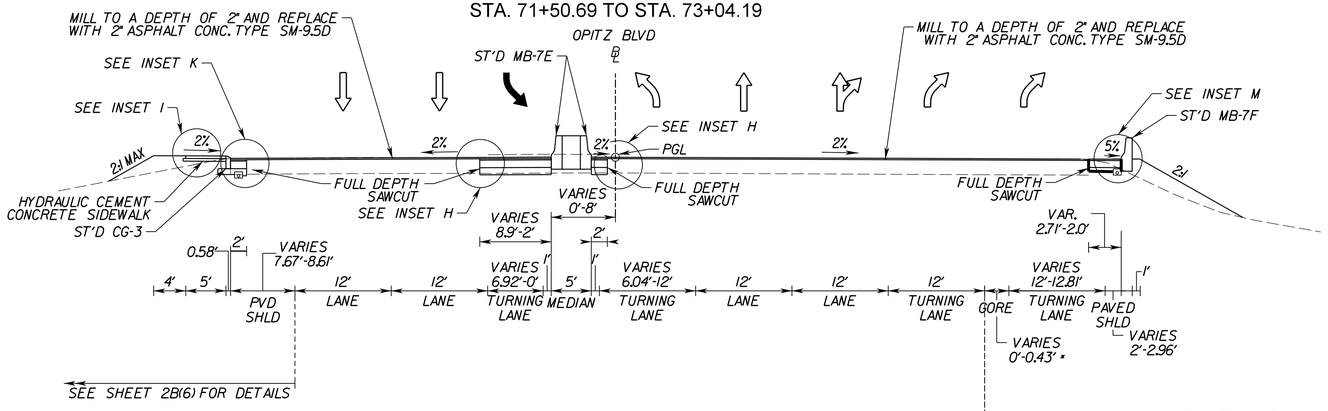

STA. 71+59.48 TO STA. 71+74.24

RAMP DECELERATION LANE CONSTRUCTION BY OTHERS

STA. 71+74.24 TO STA. 73+04.19

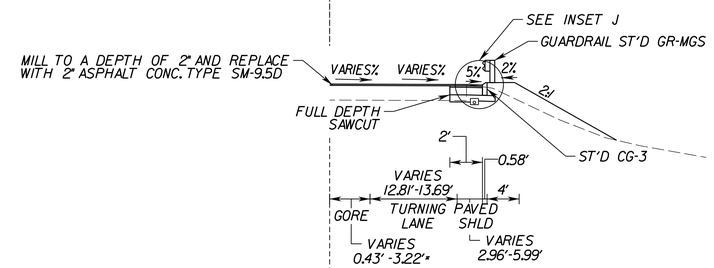

STA. 71+88.04 TO STA. 72+14.46

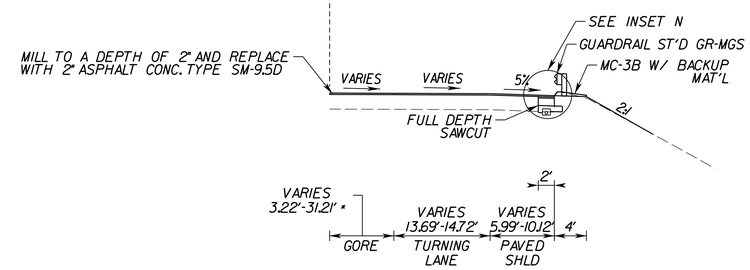

STA. 72+14.46 TO STA. 73+04.19

INSET N

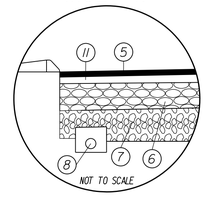

INSET H

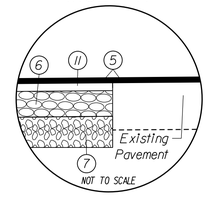

INSET I

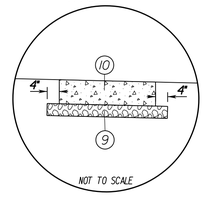

INSET J

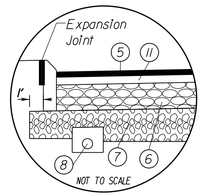

INSET K

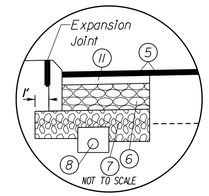

INSET M

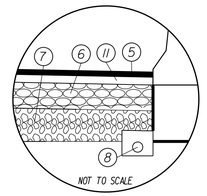

Pavement Legend

1. Asphalt Concrete Surface Course, Type SM-12.5E - 2 Inch Depth
2. Asphalt Concrete Intermediate Course, Type 19.0D - 2 Inch Depth
3. Asphalt Concrete Base Course, Type BM-25.0A - 11 Inch Depth
4. Aggregate Base Material, Type I, Size No. 21 B - 15 Inch Depth
5. Asphalt Concrete Surface Course, Type SM-9.5D - 2 Inch Depth
6. Asphalt Concrete Base Course, Type BM-25.0A - 8 Inch Depth
7. Aggregate Base Material, Type I, Size No. 21 B - 6 Inch Depth (For Opitz Blvd. widening on the high side of exist. pavement, 6" 21B will be replaced with 6" CTA base, in accordance with VDOT Special Provision for cement treated aggregate (CTA base.
8. ST'D UD-4 Underdrain
9. Aggregate Base Material, Type I, Size No. 21 B - 4 Inch Depth
10. Hydraulic Cement Conc. Sidewalk, Class A3 - 4 Inch Depth
11. Asphalt Concrete Intermediate Course, Type 19.0A - 2 Inch Depth

AFC PLANS

NOTES:
1. PAVEMENT WIDENING SHALL BE IN ACCORDANCE WITH VDOT STANDARD WP-2.

NOT TO SCALE	PROJECT 0095-076-299	SHEET NO. 2A(11)

7/11/2022 4589300100201(12).DGN
9:07:11 AM Plotted By: Jlopez-ornelas

LIMITED ACCESS HIGHWAY By Resolution of the Highway Commission dated October 4, 1956.
By Resolution of the Highway Commission dated January 18, 1973.
By Resolution of the Commonwealth Transportation Board dated April 19, 2022

PROJECT MANAGER Rimpal Shah, P.E. (703) 259-2362 (NOVA District) _____
SURVEYED BY, DATE B&B Surveying and Mapping, LLC (804) 330-3781, 03/09/2021
DESIGN BY Whitman, Requardt, & Associates, LLP (804) 212-8700 _____
SUBSURFACE UTILITY BY, DATE Accumark, Inc. (804) 550-2740, 07/07/2021

TYPICAL SECTIONS

COMMONWEALTH OF VIRGINIA — JEFFREY S. BASFORD — Lic. No. 043143 — PROFESSIONAL ENGINEER

Jeffrey S Basford
2022.07.15 16:15:04 -04'00'
Whitman, Requardt & Associates
Baltimore, Maryland
MATERIALS ENGINEER

COMMONWEALTH OF VIRGINIA — MITCHELL F. JOHNSON — Lic. No. 023838 — PROFESSIONAL ENGINEER

Mitchell F Johnson
2022.07.13 19:42:52 -04'00'
Whitman, Requardt & Associates
Richmond, Virginia
ROADWAY ENGINEER

REVISED	STATE	STATE ROUTE	STATE PROJECT	SHEET NO.
	VA.	95	0095-076-299,C-501	2A(12)

DESIGN FEATURES RELATING TO CONSTRUCTION OR TO REGULATION AND CONTROL OF TRAFFIC MAY BE SUBJECT TO CHANGE AS DEEMED NECESSARY BY THE DEPARTMENT

OPITZ BLVD.

STA. 73+04.19 TO STA. 73+33.21

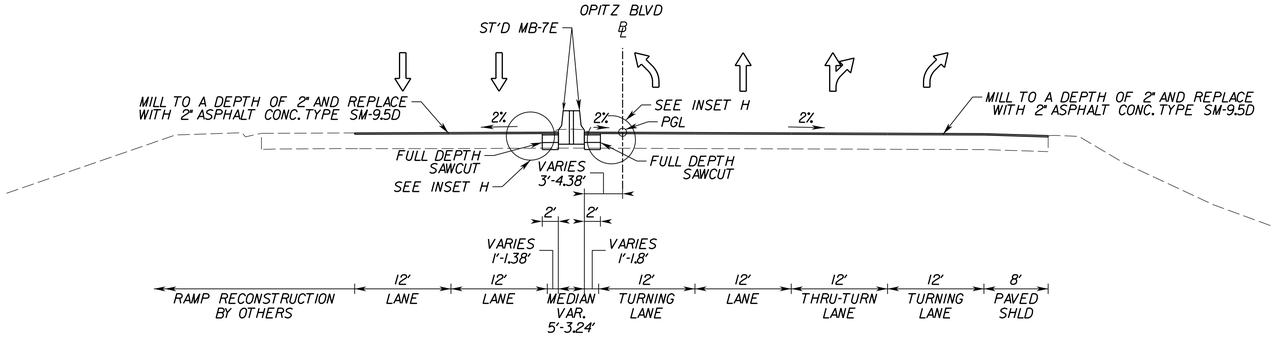

OPITZ BLVD.

STA. 73+33.21 TO STA. 74+70.98

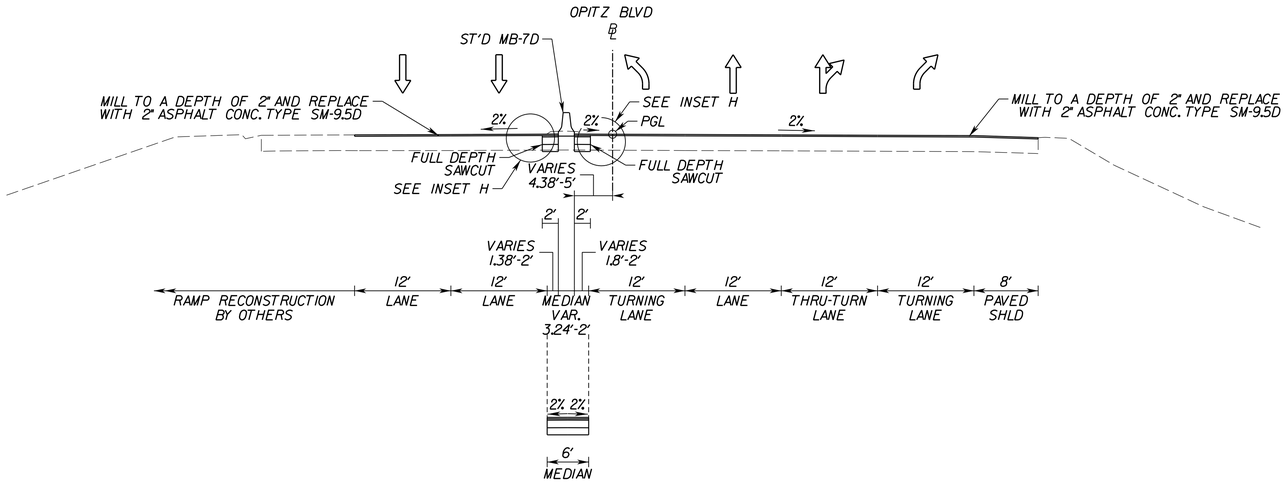

STA. 74+25.84 TO 74+70.98

INSET H

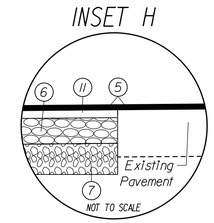

Pavement Legend

1. Asphalt Concrete Surface Course, Type SM-12.5E - 2 Inch Depth
2. Asphalt Concrete Intermediate Course, Type 19.0D - 2 Inch Depth
3. Asphalt Concrete Base Course, Type BM-25.0A - 11 Inch Depth
4. Aggregate Base Material, Type I, Size No. 21 B - 15 Inch Depth
5. Asphalt Concrete Surface Course, Type SM-9.5D - 2 Inch Depth
6. Asphalt Concrete Base Course, Type BM-25.0A - 8 Inch Depth
7. Aggregate Base Material, Type I, Size No. 21 B - 6 Inch Depth (For Opitz Blvd. widening on the high side of exist. pavement, 6" 21B will be replaced with 6" CTA base, in accordance with VDOT Special Provision for cement treated aggregate (CTA base.
8. ST'D UD-4 Underdrain
9. Aggregate Base Material, Type I, Size No. 21 B - 4 Inch Depth
10. Hydraulic Cement Conc. Sidewalk, Class A3 - 4 Inch Depth
11. Asphalt Concrete Intermediate Course, Type 19.0A - 2 Inch Depth

AFC PLANS

NOTES:
1. PAVEMENT WIDENING SHALL BE IN ACCORDANCE WITH VDOT STANDARD WP-2.

NOT TO SCALE	PROJECT 0095-076-299	SHEET NO. 2A(12)

Roll Revised 12/11/12

7/11/2022 4589300100201(1).DGN
9:07:43 AM Plotted By: jlopez-ornelas

LIMITED ACCESS HIGHWAY By Resolution of the Highway Commission dated October 4, 1956.
By Resolution of the Highway Commission dated January 18, 1973.
By Resolution of the Commonwealth Transportation Board dated April 19, 2022

PROJECT MANAGER Rimpal Shah, P.E. (703) 259-2362 (NOVA District) _____
SURVEYED BY, DATE H&B Surveying and Mapping, LLC (804) 330-3781, 03/09/2021
DESIGN BY Whitman, Requardt, & Associates, LLP (804) 212-8700 _____
SUBSURFACE UTILITY BY, DATE Accumark, Inc. (804) 550-1740, 07/07/2021

GORE RAMP DETAIL
I-95 NB EXPRESS LANES TO RAMP DBSR

COMMONWEALTH OF VIRGINIA
MITCHELL F. JOHNSON
Lic. No. 023838
PROFESSIONAL ENGINEER

Mitchell F Johnson
2022.07.13 19:43:13 -04'00'

Whitman, Requardt & Associates
Richmond, Virginia
ROADWAY ENGINEER

REVISED	STATE	STATE ROUTE	STATE PROJECT	SHEET NO.
	VA.	95	0095-076-299,C-501	2B(1)

DESIGN FEATURES RELATING TO CONSTRUCTION OR TO REGULATION AND CONTROL OF TRAFFIC MAY BE SUBJECT TO CHANGE AS DEEMED NECESSARY BY THE DEPARTMENT

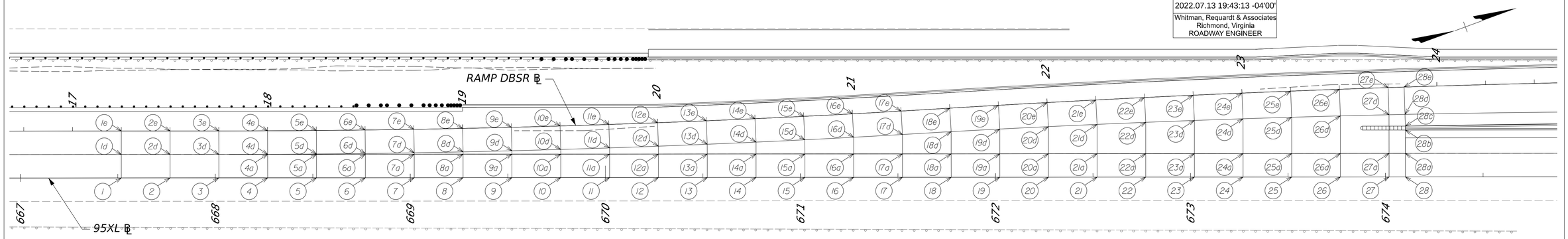

Existing I-95 Express Lanes								
EX-XBL-COMBINED Station	Point Number	Offset	Point Number	Existing Elevation	Shoulder Slope	Shoulder Width	Point Number	Shoulder Elevation
		FT		FT	%	FT		FT
667+51.82	1	12.00	1d	137.54				
667+76.82	2	12.00	2d	138.23				
668+01.82	3	12.00	3d	138.96				
668+26.86	4	12.00	4a	139.69				
668+51.91	5	12.00	5a	140.37				
668+76.96	6	12.00	6a	141.06				
669+02.01	7	12.00	7a	141.76				
669+27.06	8	12.00	8a	142.47				
669+52.10	9	12.00	9a	143.15				
669+77.14	10	12.00	10a	143.86				
670+02.18	11	12.00	11a	144.52				
670+27.21	12	12.00	12a	145.20				
670+52.25	13	12.00	13a	145.90				
670+77.27	14	12.00	14a	146.61				
671+02.29	15	12.00	15a	147.31				
671+27.31	16	12.00	16a	147.99				
671+52.32	17	12.00	17a	148.64				
671+77.31	18	12.00	18a	149.26				
672+02.24	19	12.00	19a	149.89				
672+27.17	20	12.00	20a	150.51				
672+52.11	21	12.00	21a	151.12				
672+77.05	22	12.00	22a	151.72				
673+02.00	23	12.00	23a	152.35				
673+26.94	24	12.00	24a	152.95				
673+51.89	25	12.00	25a	153.51				
673+76.84	26	12.00	26a	154.05				
674+01.80	27	12.00	27a	154.62				
674+10.18	28	12.00	28a	154.80	-5.00%	12.00	28b	154.20

Gore			
Point Number	Gore Width	Elevations Difference	Gore Slope
	Ft	FT	%
4a-4d	0.03	0.00	-2.00%
5a-5d	0.17	0.00	-2.00%
6a-6d	0.40	-0.01	-2.00%
7a-7d	0.75	-0.01	-2.00%
8a-8d	1.19	-0.02	-2.00%
9a-9d	1.74	-0.04	-2.30%
10a-10d	2.40	-0.09	-3.75%
11a-11d	3.16	-0.10	-3.16%
12a-12d	4.02	-0.13	-3.23%
13a-13d	5.00	-0.17	-3.40%
14a-14d	6.06	-0.23	-3.80%
15a-15d	7.23	-0.27	-3.67%
16a-16d	8.51	-0.30	-3.53%
17a-17d	9.90	-0.29	-2.93%
18a-18d	11.35	-0.26	-2.29%
19a-19d	12.66	-0.26	-2.05%
20a-20d	13.88	-0.28	-2.02%
21a-21d	15.01	-0.31	-2.07%
22a-22d	16.04	-0.37	-2.31%
23a-23d	16.98	-0.48	-2.83%
24a-24d	17.83	-0.59	-3.31%
25a-25d	18.59	-0.68	-3.66%
26a-26d	19.26	-0.78	-4.05%
27a-27d	19.83	-0.94	-4.74%
28b-28c	2.00	-0.12	-6.00%

Ramp DBSR											
Point Number	Shoulder Elevation	Shoulder Slope	Shoulder Width	Point Number	Edge Elevation	Pavement Slope	Pavement Width	Station	Point Number	Baseline Elevation	Forward Grade
	FT	%	FT		FT	%	FT			FT	%
				1d	137.54	2.00%	12.00	17+25.00	1e	137.30	2.76%
				2d	138.23	2.00%	12.00	17+50.00	2e	137.99	2.92%
				3d	138.96	2.00%	12.00	17+75.00	3e	138.72	2.92%
				4d	139.69	2.00%	12.00	18+00.00	4e	139.45	2.71%
				5d	140.37	2.00%	12.00	18+25.00	5e	140.13	2.74%
				6d	141.05	2.00%	12.00	18+50.00	6e	140.81	2.77%
				7d	141.75	2.00%	12.00	18+75.00	7e	141.51	2.80%
				8d	142.45	2.00%	12.00	19+00.00	8e	142.21	2.66%
				9d	143.11	2.00%	12.00	19+25.00	9e	142.87	2.64%
				10d	143.77	2.00%	12.00	19+50.00	10e	143.53	2.60%
				11d	144.42	2.00%	12.00	19+75.00	11e	144.18	2.60%
				12d	145.07	2.00%	12.00	20+00.00	12e	144.83	2.64%
				13d	145.73	2.00%	12.00	20+25.00	13e	145.49	2.60%
				14d	146.38	2.00%	12.00	20+50.00	14e	146.14	2.64%
				15d	147.04	2.00%	12.00	20+75.00	15e	146.80	2.60%
				16d	147.69	2.00%	12.00	21+00.00	16e	147.45	2.64%
				17d	148.35	2.00%	12.00	21+25.00	17e	148.11	2.60%
				18d	149.00	2.00%	12.03	21+50.00	18e	148.76	2.52%
				19d	149.63	2.00%	12.17	21+75.00	19e	149.39	2.36%
				20d	150.23	2.00%	12.34	22+00.00	20e	149.98	2.32%
				21d	150.81	2.00%	12.51	22+25.00	21e	150.56	2.16%
				22d	151.35	2.00%	12.70	22+50.00	22e	151.10	2.04%
				23d	151.87	2.00%	12.91	22+75.00	23e	151.61	1.96%
				24d	152.36	2.00%	13.14	23+00.00	24e	152.10	1.84%
				25d	152.83	2.00%	13.38	23+25.00	25e	152.56	1.76%
				26d	153.27	2.00%	13.63	23+50.00	26e	153.00	1.60%
				27d	153.68	2.00%	13.91	23+75.00	27e	153.40	1.46%
28c	154.08	-4.64%	6.00	28d	153.80	2.00%	14.00	23+83.21	28e	153.52	1.19%

AFC PLANS

SCALE	PROJECT	SHEET NO.
0 25' 50'	0095-076-299	2B(1)

Cell Revised 12/1/12

7/11/2022 4589300100(2B(2).DGN
9:08:06 AM Plotted By: Jlopez-ornelas

LIMITED ACCESS HIGHWAY By Resolution of the Highway Commission dated October 4, 1956.
By Resolution of the Highway Commission dated January 18, 1973.
By Resolution of the Commonwealth Transportation Board dated April 19, 2022

PROJECT MANAGER Rimpal Shah, P.E. (703) 259-2362 (NOVA District) _____
SURVEYED BY, DATE H&B Surveying and Mapping, LLC (804) 330-3781, 03/09/2021
DESIGN BY Whitman, Requardt, & Associates, LLP (804) 212-8700 _____
SUBSURFACE UTILITY BY, DATE Accumark, Inc. (804) 550-7740, 07/07/2021

COMMONWEALTH OF VIRGINIA
MITCHELL F. JOHNSON
Lic. No. 023838
PROFESSIONAL ENGINEER

Mitchell F Johnson
2022.07.13 19:43:34 -04'00'

Whitman, Requardt & Associates
Richmond, Virginia
ROADWAY ENGINEER

REVISED	STATE	STATE ROUTE	STATE PROJECT	SHEET NO.
	VA.	95	0095-076-299,C-501	2B(2)

DESIGN FEATURES RELATING TO CONSTRUCTION OR TO REGULATION AND CONTROL OF TRAFFIC MAY BE SUBJECT TO CHANGE AS DEEMED NECESSARY BY THE DEPARTMENT

GORE RAMP DETAIL
I-95 SBL TO RAMP DBSR

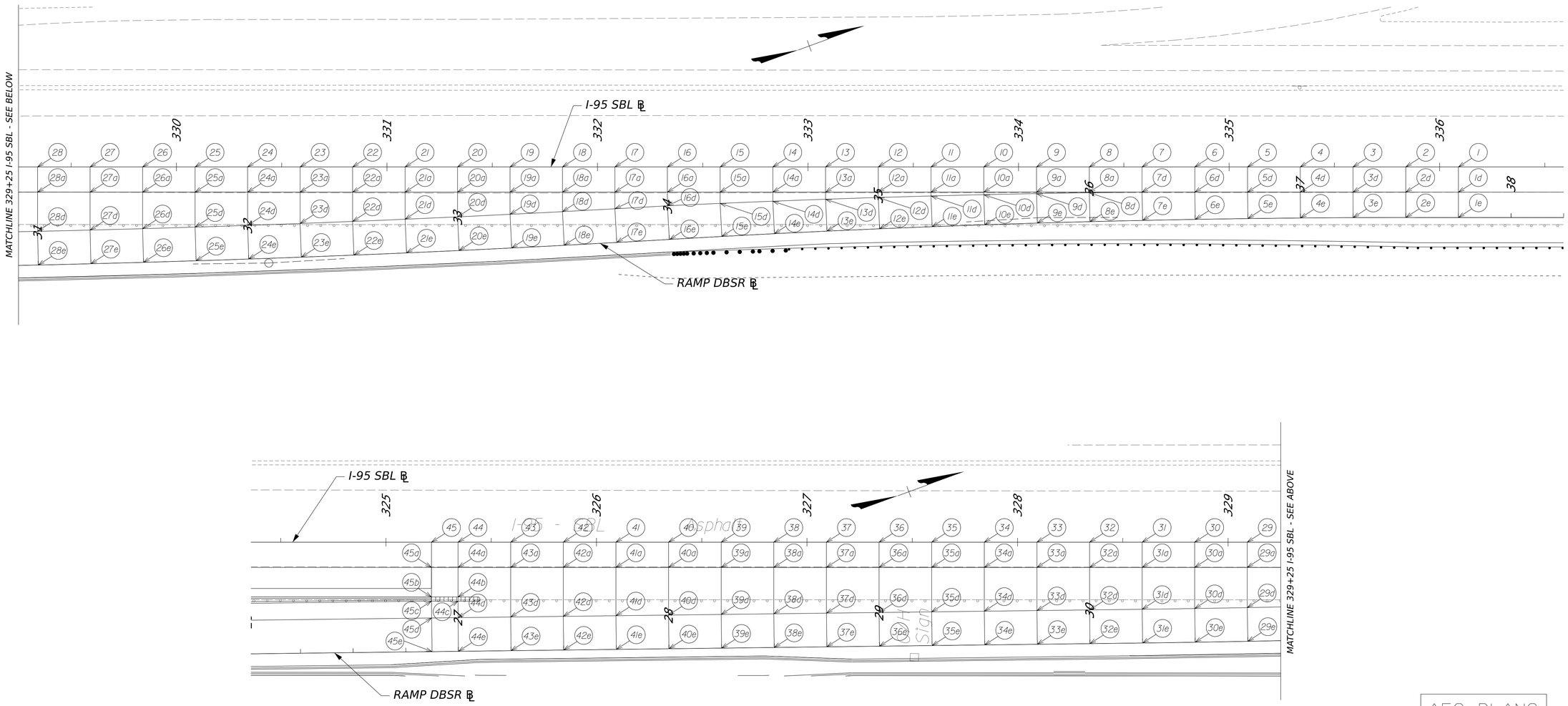

AFC PLANS

NOTE: SEE POINT DETAILS ON SHEET 2B(3)

SCALE	PROJECT	SHEET NO.
0 25' 50'	0095-076-299	2B(2)

Roll Revised 12/11/12

LIMITED ACCESS HIGHWAY By Resolution of the Highway Commission dated October 4, 1956.
By Resolution of the Highway Commission dated January 18, 1973.
By Resolution of the Commonwealth Transportation Board dated April 19, 2022

PROJECT MANAGER Rimpal Shah, P.E. (703) 259-2362 (NOVA District) _____
SURVEYED BY, DATE H&B Surveying and Mapping, LLC (804) 330-3781, 03/09/2021
DESIGN BY Whitman, Requardt, & Associates, LLP (804) 212-8700 _____.
SUBSURFACE UTILITY BY, DATE Accumark, Inc. (804) 550-1740, 07/07/2021

GORE RAMP DETAIL
I-95 SBL TO RAMP DBSR

COMMONWEALTH OF VIRGINIA
MITCHELL F. JOHNSON
Lic. No. 023838
PROFESSIONAL ENGINEER

Mitchell F Johnson
2022.07.13 19:43:54 -04'00'

Whitman, Requardt & Associates
Richmond, Virginia
ROADWAY ENGINEER

REVISED	STATE	STATE		SHEET NO.
	ROUTE	PROJECT		
	VA.	95	0095-076-299,C-501	2B(3)

DESIGN FEATURES RELATING TO CONSTRUCTION OR TO REGULATION AND CONTROL OF TRAFFIC MAY BE SUBJECT TO CHANGE AS DEEMED NECESSARY BY THE DEPARTMENT

Existing I-95 SBL								
Existing SBL Centerline	Point Number	Offset	Point Number	Ex. Pavement	Shoulder Slope	Shoulder Width	Point Number	Shoulder Elevation
		FT		FT	%	FT		FT
336+08.93	1	12.00	1d	172.27				
335+83.92	2	12.00	2d	172.05				
335+58.87	3	12.00	3d	171.82				
335+33.82	4	12.00	4d	171.56				
335+08.76	5	12.00	5d	171.28				
334+83.71	6	12.00	6d	171.02				
334+58.65	7	12.00	7d	170.78				
334+33.59	8	12.00	8a	170.53				
334+08.53	9	12.00	9a	170.28				
333+83.48	10	12.00	10a	170.02				
333+58.42	11	12.00	11a	169.78				
333+33.37	12	12.00	12a	169.54				
333+08.32	13	12.00	13a	169.30				
332+83.27	14	12.00	14a	169.04				
332+58.23	15	12.00	15a	168.77				
332+33.19	16	12.00	16a	168.53				
332+08.28	17	12.00	17a	168.27				
331+83.36	18	12.00	18a	168.02				
331+58.45	19	12.00	19a	167.77				
331+33.52	20	12.00	20a	167.51				
331+08.60	21	12.00	21a	167.23				
330+83.67	22	12.00	22a	166.94				
330+58.74	23	12.00	23a	166.64				
330+33.80	24	12.00	24a	166.33				
330+08.86	25	12.00	25a	166.01				
329+83.92	26	12.00	26a	165.68				
329+58.98	27	12.00	27a	165.34				
329+34.04	28	12.00	28a	165.00				
329+09.09	29	12.00	29a	164.64				
328+84.15	30	12.00	30a	164.28				
328+59.20	31	12.00	31a	163.91				
328+34.21	32	12.00	32a	163.53				
328+09.21	33	12.00	33a	163.14				
327+84.22	34	12.00	34a	162.74				
327+59.22	35	12.00	35a	162.31				
327+34.22	36	12.00	36a	161.88				
327+09.22	37	12.00	37a	161.45				
326+84.22	38	12.00	38a	160.96				
326+59.22	39	12.00	39a	160.47				
326+34.23	40	12.00	40a	160.00				
326+09.23	41	12.00	41a	159.51				
325+84.23	42	12.00	42a	159.02				
325+59.23	43	12.00	43a	158.52				
325+34.23	44	12.00	44a	158.01	-3.50%	14.01	44b	157.5197
325+21.62	45	12.00	45a	157.75	-5.00%	14	45b	157.05

Gore			
Point Number	Gore Width	Elevations Difference	Gore Slope
	Ft	FT	%
8a-8d	0.24	0.00	-2.00%
9a-9d	0.66	-0.02	-3.03%
10a-10d	1.17	-0.03	-2.56%
11a-11d	1.79	-0.06	-3.35%
12a-12d	2.52	-0.09	-3.57%
13a-13d	3.35	-0.12	-3.58%
14a-14d	4.28	-0.13	-3.04%
15a-15d	5.32	-0.13	-2.44%
16a-16d	6.46	-0.16	-2.48%
17a-17d	7.89	-0.17	-2.15%
18a-18d	9.24	-0.19	-2.06%
19a-19d	10.52	-0.22	-2.09%
20a-20d	11.72	-0.25	-2.13%
21a-21d	12.84	-0.28	-2.18%
22a-22d	13.89	-0.31	-2.23%
23a-23d	14.86	-0.34	-2.29%
24a-24d	15.76	-0.38	-2.41%
25a-25d	16.58	-0.42	-2.53%
26a-26d	17.32	-0.45	-2.60%
27a-27d	17.99	-0.46	-2.56%
28b-28c	18.58	-0.48	-2.58%
29b-29c	19.09	-0.48	-2.51%
30a-30c	19.53	-0.48	-2.46%
31a-31d	19.89	-0.48	-2.41%
32a-33d	20.2	-0.49	-2.43%
33a-33d	20.5	-0.52	-2.54%
34a-34d	20.81	-0.55	-2.64%
35a-35d	21.11	-0.57	-2.70%
36a-36d	21.41	-0.61	-2.85%
37a-37d	21.72	-0.66	-3.04%
38a-38d	20.02	-0.64	-3.20%
39a-39d	22.33	-0.63	-2.82%
40a-40d	22.63	-0.64	-2.83%
41a-41d	22.9	-0.62	-2.71%
42a-42d	23.24	-0.56	-2.41%
43a-43d	23.54	-0.48	-2.04%
44b-44c	2	-0.06	-3.05%
45b-45c	2	0.08	4.00%

Ramp DBSR											
Point Number	Shoulder Elevation	Shoulder Slope	Shoulder Width	Point Number	Edge Elevation	Pavement Slope	Pavement Width	Station	Point Number	Baseline Elevation	Forward Grade
	FT	%	FT		FT	%	FT			FT	%
				1d	172.27	2.00%	12	37+75.00	1e	172.03	-0.88%
				2d	172.05	2.00%	12	37+50.00	2e	171.81	-0.93%
				3d	171.82	2.00%	12.07	37+25.00	3e	171.58	-1.07%
				4d	171.56	2.00%	12.45	37+00.00	4e	171.31	-1.13%
				5d	171.28	2.00%	12.52	36+75.00	5e	171.03	-1.07%
				6d	171.02	2.00%	12.91	36+50.00	6e	170.76	-1.00%
				7d	170.78	2.00%	13.39	36+25.00	7e	170.51	-1.05%
				8d	170.53	2.00%	13.74	36+00.00	8e	170.25	-1.08%
				9d	170.26	2.00%	14.02	35+75.00	9e	169.98	-1.12%
				10d	169.99	2.00%	14.3	35+50.00	10e	169.70	-1.08%
				11d	169.72	2.00%	14.59	35+25.00	11e	169.43	-1.12%
				12d	169.45	2.00%	14.87	35+00.00	12e	169.15	-1.08%
				13d	169.18	2.00%	15.15	34+75.00	13e	168.88	-1.12%
				14d	168.91	2.00%	15.44	34+50.00	14e	168.60	-1.08%
				15d	168.64	2.00%	15.72	34+25.00	15e	168.33	-1.12%
				16d	168.37	2.00%	16	34+00.00	16e	168.05	-1.08%
				17d	168.10	2.00%	16	33+75.00	17e	167.78	-1.08%
				18d	167.83	2.00%	16	33+50.00	18e	167.51	-1.12%
				19d	167.55	2.00%	16	33+25.00	19e	167.23	-1.16%
				20d	167.26	2.00%	16	33+00.00	20e	166.94	-1.24%
				21d	166.95	2.00%	16	32+75.00	21e	166.63	-1.28%
				22d	166.63	2.00%	16	32+50.00	22e	166.31	-1.32%
				23d	166.30	2.00%	16	32+25.00	23e	165.98	-1.40%
				24d	165.95	2.00%	16	32+00.00	24e	165.63	-1.44%
				25d	165.59	2.00%	16	31+75.00	25e	165.27	-1.44%
				26d	165.23	2.00%	16	31+50.00	26e	164.91	-1.40%
				27d	164.88	2.00%	16	31+25.00	27e	164.56	-1.44%
				28d	164.52	2.00%	16	31+00.00	28e	164.20	-1.44%
				29d	164.16	2.00%	16	30+75.00	29e	163.84	-1.44%
				30d	163.80	2.00%	16	30+50.00	30e	163.48	-1.48%
				31d	163.43	2.00%	16	30+25.00	31e	163.11	-1.56%
				32d	163.04	2.00%	16	30+00.00	32e	162.72	-1.68%
				33d	162.62	2.00%	16	29+75.00	33e	162.30	-1.72%
				34d	162.19	2.00%	16	29+50.00	34e	161.87	-1.80%
				35d	161.74	2.00%	16	29+25.00	35e	161.42	-1.88%
				36d	161.27	2.00%	16	29+00.00	36e	160.95	-1.92%
				37d	160.79	2.00%	16	28+75.00	37e	160.47	-1.88%
				38d	160.32	2.00%	16	28+50.00	38e	160.00	-1.92%
				39d	159.84	2.00%	16	28+25.00	39e	159.52	-1.92%
				40d	159.36	2.00%	16	28+00.00	40e	159.04	-1.88%
				41d	158.89	2.00%	16	27+75.00	41e	158.57	-1.72%
				42d	158.46	2.00%	16	27+50.00	42e	158.14	-1.68%
				43d	158.04	2.00%	16	27+25.00	43e	157.72	-1.40%
44c	157.46	-2.95%	7.84	44d	157.69	2.00%	16	27+00.00	44e	157.37	-1.28%
45c	157.13	-5.00%	8	45d	157.53	2.00%	16	26+87.48	45e	157.21	-1.01%

AFC PLANS

NOTE: SEE POINTS ON PLAN VIEW ON SHEET 2B(2)

SCALE	PROJECT	SHEET NO.
0 25' 50'	0095-076-299	2B(3)

7/11/2022 4589300100214).DGN
9:09:34 AM Plotted By: Jlopez-ornelas

LIMITED ACCESS HIGHWAY

By Resolution of the Highway Commission dated October 4, 1956.
By Resolution of the Highway Commission dated January 18, 1973.
By Resolution of the Commonwealth Transportation Board dated April 19, 2022

PROJECT MANAGER Rimpal Shah, P.E. (703) 259-2362 (NOVA District) _____
SURVEYED BY, DATE H&B Surveying and Mapping, LLC (804) 330-3781, 03/09/2021
DESIGN BY Whitman, Requardt, & Associates, LLP (804) 212-8700 _____
SUBSURFACE UTILITY BY, DATE Accumark, Inc. (804) 550-7740, 07/07/2021

GORE RAMP DETAIL
OPITZ BLVD EB TO I-95 NB LOOP

COMMONWEALTH OF VIRGINIA
MITCHELL F. JOHNSON
Lic. No. 023838
PROFESSIONAL ENGINEER

Mitchell F Johnson
2022.07.13 19:44:13 -04'00'

Whitman, Requardt & Associates
Richmond, Virginia
ROADWAY ENGINEER

REVISED	STATE	STATE ROUTE	STATE PROJECT	SHEET NO.
	VA.	95	0095-076-299,C-501	2B(4)

DESIGN FEATURES RELATING TO CONSTRUCTION OR TO REGULATION AND CONTROL OF TRAFFIC MAY BE SUBJECT TO CHANGE AS DEEMED NECESSARY BY THE DEPARTMENT

Opitz Blvd												
Opitz Blvd Station	Point Number	Offset	Point Number	Elevation	Pavement Slope	Pavement Width	Point Number	Edge Elevation	Shoulder Width	Shoulder Slope	Shoulder Elevation	Point Number
		FT		FT	%	FT		FT	FT	%	FT	
71+53.47	1	12.08	1a	208.55	-2.00%	36.00	1f	207.83				
71+79.18	2	12.08	2a	207.69	-2.00%	36.00	2b	206.97				
72+05.29	3	11.98	3a	206.81	-2.00%	36.00	3b	206.09				
72+31.29	4	11.46	4a	206.05	-2.00%	36.00	4b	205.33				
72+57.64	5	10.93	5a	205.29	-2.00%	36.00	5b	204.57				
72+84.67	6	10.39	6a	204.49	-2.00%	36.00	6b	203.77				
73+08.29	7	9.92	7a	203.83	-2.00%	36.00	7b	203.11	7.88	-2.00%	202.95	7c

Gore									
Point Number	Gore Width	Elevations Difference	Gore Slope	Point Number	Elevation	Point Number	Gore Width	Elevations Difference	Gore Slope
	Ft	FT	%		Ft		Ft	FT	%
2b-2f	0.09	0.0019	-2.02%						
3b-3d	0.54	0.03	-2.00%	3d	206.08	3d-3f	1.3674	-0.04	-2.67%
4b-4d	4.19	-0.08	-2.00%	4d	205.25	4d-4f	2.10	-0.06	-2.66%
5b-5d	7.88	-0.16	-2.00%	5d	204.41	5d-5f	5.01	-0.15	-2.97%
6b-6d	11.68	-0.23	-2.00%	6d	203.53	6d-6f	10.23	-0.30	-2.93%
7c-7d	7.06	-0.14	-2.00%	7d	202.81	7d-7e	7.06	-0.40	-5.66%

NB Loop Ramp											
Point Number	Shoulder Elevation	Shoulder Slope	Shoulder Width	Point Number	Edge Elevation	Pavement Slope	Pavement Width	Station	Point Number	Baseline Elevation	Forward Grade
	FT	%	FT		FT	%	FT			FT	%
				1f	207.83	3.08%	12.00	51+25.00	1g	207.46	-3.96%
				2f	206.97	4.00%	12.47	51+50.00	2g	206.47	-3.52%
				3f	206.12	4.00%	13.26	51+75.00	3g	205.59	-3.36%
				4f	205.31	4.00%	13.88	52+00.00	4g	204.75	-3.04%
				5f	204.56	4.00%	14.33	52+25.00	5g	203.99	-3.44%
				6f	203.83	4.81%	14.61	52+50.00	6g	203.13	-3.41%
7e	203.09	-1.25%	9.63	7f	203.21	5.75%	14.72	52+72.56	7g	202.36	-3.84%

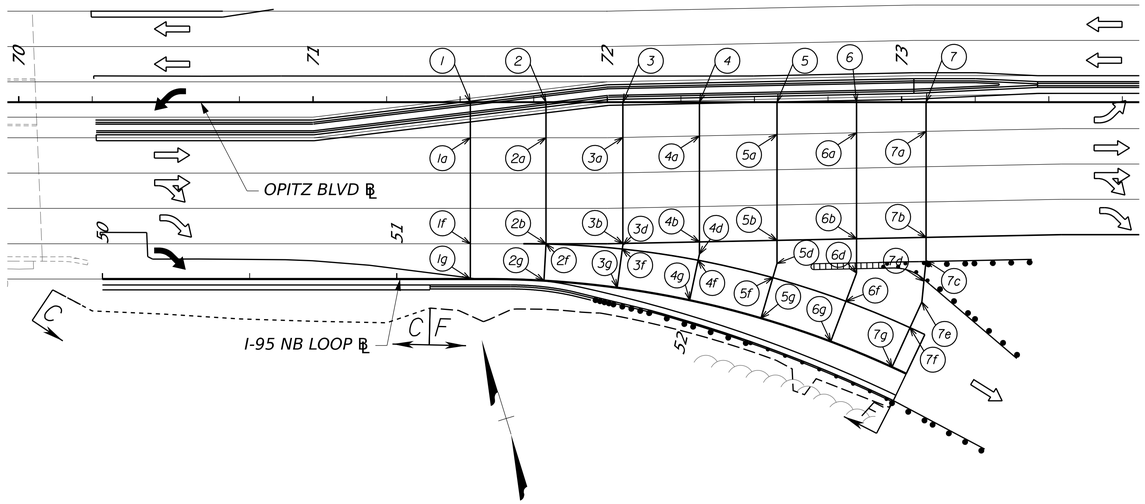

AFC PLANS

SCALE 0 25' 50'

PROJECT	SHEET NO.
0095-076-299	2B(4)

7/11/2022 4589300I002B(5).DGN
9:10:32 AM Plotted By: jlopez-ornelas

LIMITED ACCESS HIGHWAY

By Resolution of the Highway Commission dated October 4, 1956.
By Resolution of the Highway Commission dated January 18, 1973.
By Resolution of the Commonwealth Transportation Board dated April 19, 2022

PROJECT MANAGER Rimpal Shah, P.E. (703) 259-2362 (NOVA District)
SURVEYED BY, DATE H&B Surveying and Mapping, LLC (804) 330-3781, 03/09/2021
DESIGN BY Whitman, Requardt, & Associates, LLP (804) 212-8700
SUBSURFACE UTILITY BY, DATE Accumark, Inc. (804) 550-7740, 07/07/2021

STAKING DETAILS
TELEGRAPH ROAD INTERSECTION

COMMONWEALTH OF VIRGINIA
MITCHELL F. JOHNSON
Lic. No. 023838
PROFESSIONAL ENGINEER

Mitchell F Johnson
2022.07.13 19:44:35 -04'00'

Whitman, Requardt & Associates
Richmond, Virginia
ROADWAY ENGINEER

REVISED	STATE	STATE ROUTE	STATE PROJECT	SHEET NO.
	VA.	95	0095-076-299,C-501	2B(5)

DESIGN FEATURES RELATING TO CONSTRUCTION OR TO REGULATION AND CONTROL OF TRAFFIC MAY BE SUBJECT TO CHANGE AS DEEMED NECESSARY BY THE DEPARTMENT

SEE INSET A

TELEGRAPH ROAD

SEE SHEETS 2B(7) - 2B(8) FOR FURTHER DETAILS NOT SHOWN ON THIS SHEET.

OPITZ BOULEVARD WB

Rte 642
Opitz Blvd

OPITZ BLVD ℄

OPITZ BOULEVARD EB

INSET A
NOT TO SCALE

CONCRETE CLASS A3 4" WITH 6x6 W2.1 x W2.1 FABRIC

EXISTING CONCRETE FOUNDATION DO NOT DISTURB

S=25.87%

S=45.90%

S=88.81%

EXPANSION JOINT

LEGEND

- A — MATCH EXISTING GRADE
- B — 12:1 MAX GRADE
- C — 50:1 MAX GRADE
- CG-12 DETECTABLE WARNING SURFACE
- 5' CONCRETE SIDEWALK
- CONCRETE CLASS A3 4" WITH 6x6 W2.1 x W2.1 FABRIC

AFC PLANS

SCALE 0 5' 10'

PROJECT	SHEET NO.
0095-076-299	2B(5)

Cell Revised 12/1/12

7/11/2022 4589300100205A1.DGN
9:10:48 AM Plotted By: jlopez-ornelas

LIMITED ACCESS HIGHWAY By Resolution of the Highway Commission dated October 4, 1956.
By Resolution of the Highway Commission dated January 18, 1973
By Resolution of the Commonwealth Transportation Board dated April 19, 2022

PROJECT MANAGER Rimpal Shah, P.E. (703) 259-2362 (NOVA District) _____
SURVEYED BY, DATE H&B Surveying and Mapping, LLC (804) 330-3781, 03/09/2021
DESIGN BY Whitman, Requardt, & Associates, LLP (804) 212-8700 _____.
SUBSURFACE UTILITY BY, DATE Accumark, Inc. (804) 550-7740, 07/07/2021

COMMONWEALTH OF VIRGINIA
MITCHELL F. JOHNSON
Lic. No. 023838
PROFESSIONAL ENGINEER

Mitchell F Johnson
2022.07.13 19:44:57 -04'00'

Whitman, Requardt & Associates
Richmond, Virginia
ROADWAY ENGINEER

REVISED	STATE	STATE ROUTE	STATE PROJECT	SHEET NO.
	VA.	95	0095-076-299,C-501	2B(5A)

DESIGN FEATURES RELATING TO CONSTRUCTION OR TO REGULATION AND CONTROL OF TRAFFIC MAY BE SUBJECT TO CHANGE AS DEEMED NECESSARY BY THE DEPARTMENT

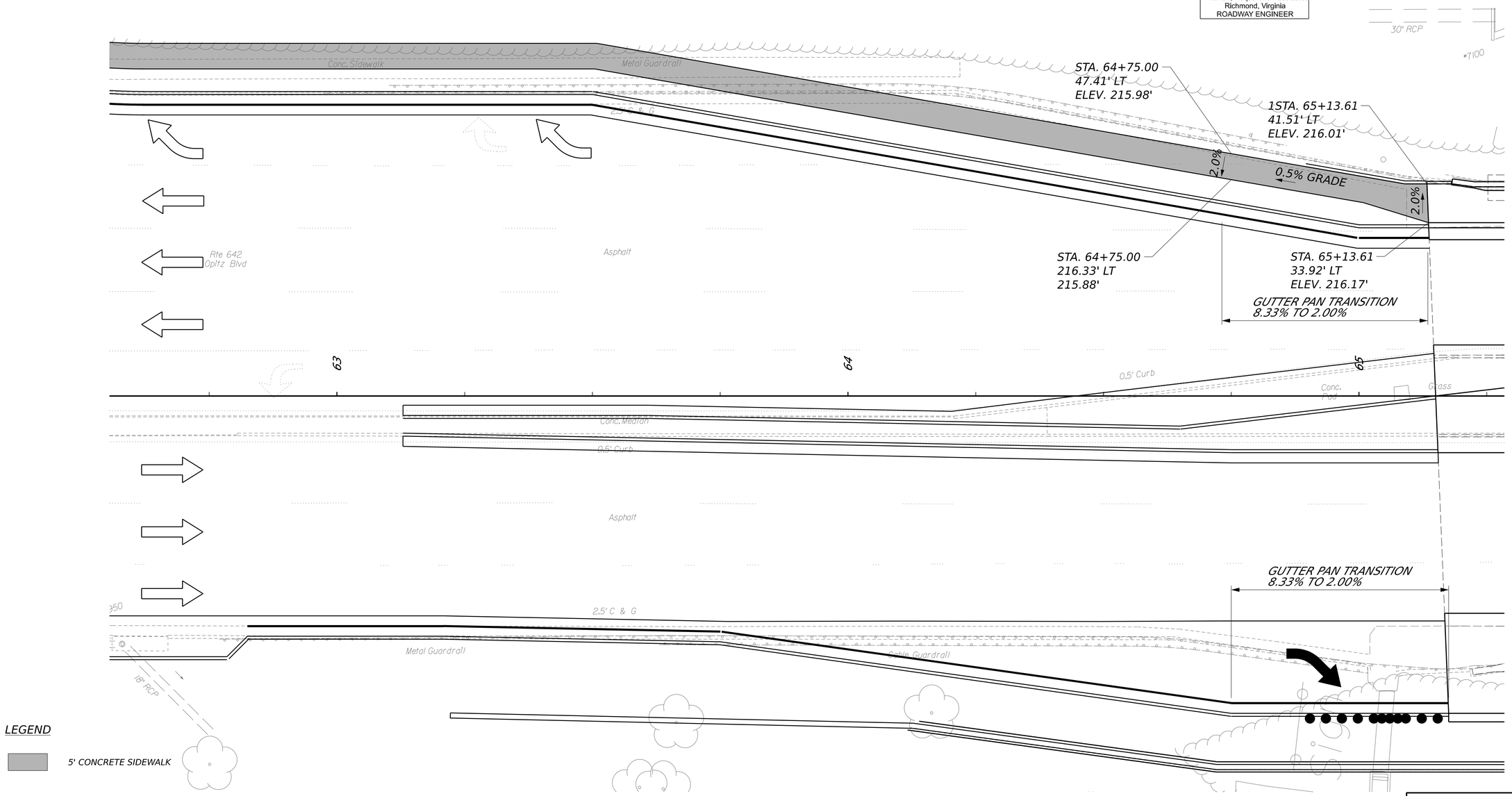

LEGEND

5' CONCRETE SIDEWALK

AFC PLANS

SCALE
0 5' 10'

	PROJECT	SHEET NO.
	0095-076-299	2B(5A)

Cell Revised 12/11/12

7/11/2022 4589300100216)1.DGN
9:15:5 AM Plotted By: jlopez-ornelas

LIMITED ACCESS HIGHWAY By Resolution of the Highway Commission dated October 4, 1956.
By Resolution of the Highway Commission dated January 18, 1973.
By Resolution of the Commonwealth Transportation Board dated April 19, 2022

PROJECT MANAGER Rimpal Shah, P.E. (703) 259-2362 (NOVA District) _____
SURVEYED BY, DATE H&B Surveying and Mapping, LLC (804) 330-3781, 03/09/2021
DESIGN BY Whitman, Requardt, & Associates, LLP (804) 212-8700 _____
SUBSURFACE UTILITY BY, DATE Accumark, Inc. (804) 550-7740, 07/07/2021

STAKING DETAILS
I-95 NB ENTRANCE RAMP

REVISED	STATE	STATE ROUTE	STATE PROJECT	SHEET NO.
	VA.	95	0095-076-299,C-501	2B(6)

COMMONWEALTH OF VIRGINIA
MITCHELL F. JOHNSON
Lic. No. 023838
PROFESSIONAL ENGINEER

Mitchell F Johnson
2022.07.13 19:45:14 -04'00'

Whitman, Requardt & Associates
Richmond, Virginia
ROADWAY ENGINEER

DESIGN FEATURES RELATING TO CONSTRUCTION OR TO REGULATION AND CONTROL OF TRAFFIC MAY BE SUBJECT TO CHANGE AS DEEMED NECESSARY BY THE DEPARTMENT

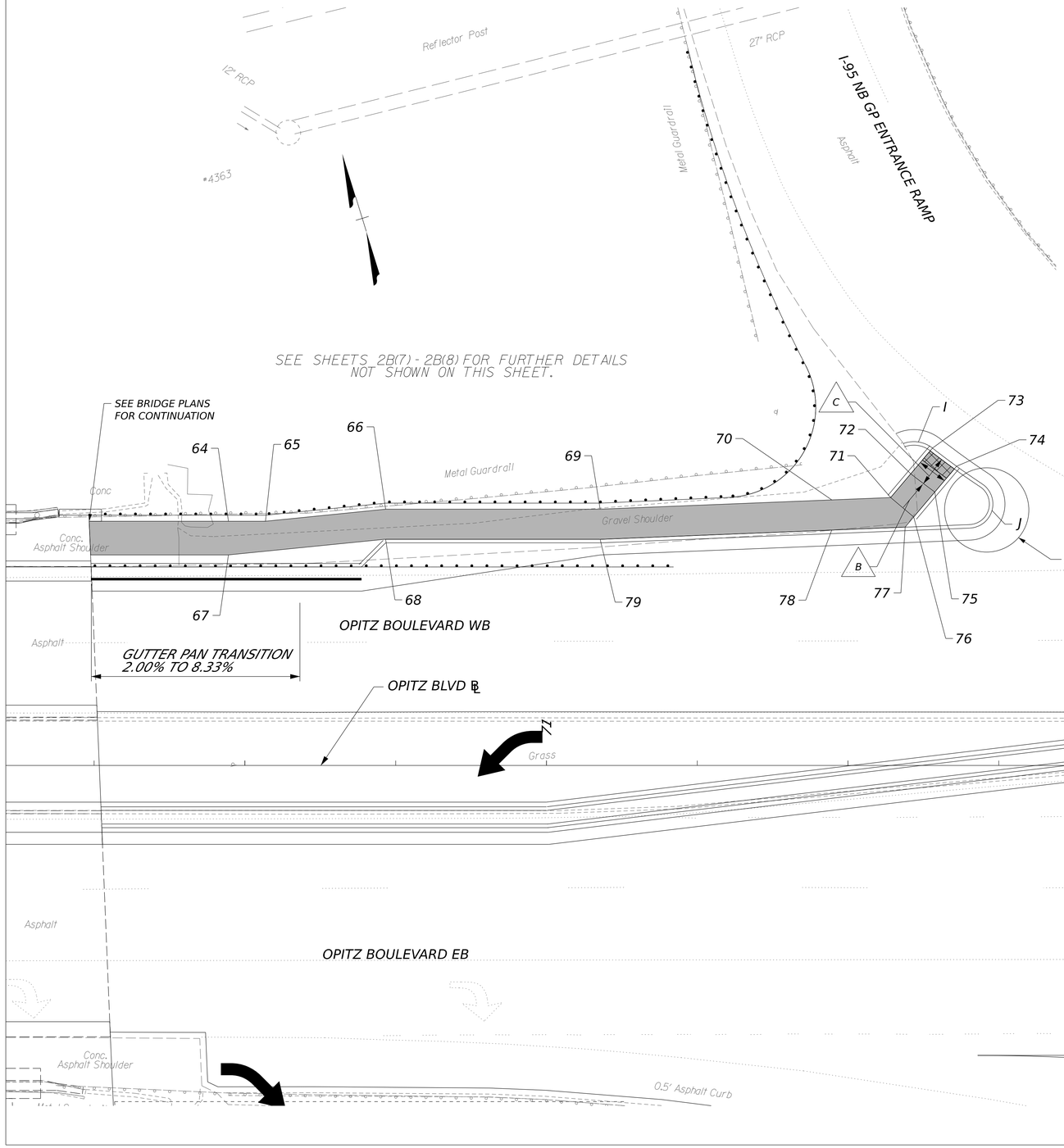

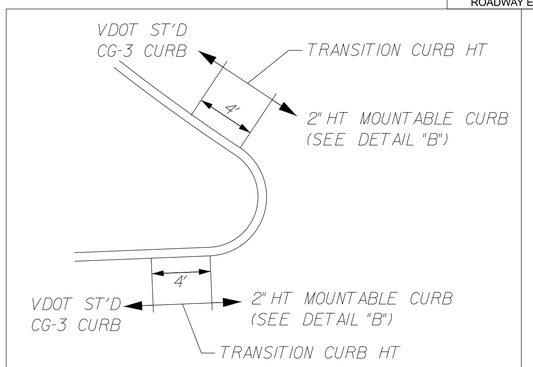

DETAIL "A"
(NOT TO SCALE)

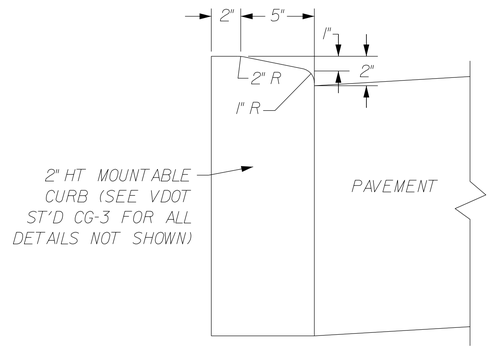

DETAIL "B"
(NOT TO SCALE)

LEGEND

- A — MATCH EXISTING GRADE
- B — 12:1 MAX GRADE
- C — 50:1 MAX GRADE
- CG-12 DETECTABLE WARNING SURFACE
- 5' CONCRETE SIDEWALK

AFC PLANS

SCALE 0 5' 10'

	PROJECT	SHEET NO.
	0095-076-299	2B(6)

Cell Revised 12/11/12

LIMITED ACCESS HIGHWAY By Resolution of the Highway Commission dated October 4, 1956.
By Resolution of the Highway Commission dated January 18, 1973.
By Resolution of the Commonwealth Transportation Board dated April 19, 2022

PROJECT MANAGER Rimpal Shah, P.E. (703) 259-2362 (NOVA District) _____
SURVEYED BY, DATE H&B Surveying and Mapping, LLC (804) 330-3781, 03/09/2021
DESIGN BY Whitman, Requardt, & Associates, LLP (804) 212-8700 _____.
SUBSURFACE UTILITY BY, DATE Accumark, Inc. (804) 550-2740, 07/07/2021

COMMONWEALTH OF VIRGINIA
MITCHELL F. JOHNSON
Lic. No. 023838
PROFESSIONAL ENGINEER

Mitchell F Johnson
2022.07.13 19:45:31 -04'00'

Whitman, Requardt & Associates
Richmond, Virginia
ROADWAY ENGINEER

REVISED	STATE	STATE ROUTE	STATE PROJECT	SHEET NO.
	VA.	95	0095-076-299,C-501	2B(7)

DESIGN FEATURES RELATING TO CONSTRUCTION OR TO REGULATION AND CONTROL OF TRAFFIC MAY BE SUBJECT TO CHANGE AS DEEMED NECESSARY BY THE DEPARTMENT

STAKING POINT DETAILS

LOCATION	BASELINE			LOCATION	BASELINE			LOCATION	BASELINE			LOCATION	BASELINE		
Point	Station	Offset (ft)	Face of Curb/Sidewalk Elevation (ft)	Point	Station	Offset (ft)	Face of Curb/Sidewalk Elevation (ft)	Point	Station	Offset (ft)	Face of Curb/Sidewalk Elevation (ft)	Point	Station	Offset (ft)	Face of Curb/Sidewalk Elevation (ft)
1	60+30.21	65.86 LT	210.60	21	60+50.96	79.79 LT	210.41	41	61+66.37	62.08 LT	210.56	61	60+44.25	75.06 LT	211.16
2	60+37.40	66.30 LT	210.27	22	60+48.01	77.09 LT	210.74	42	61+62.55	65.31 LT	210.52	62	60+43.63	79.79 LT	212.31
3	60+37.95	66.39 LT	210.26	23	60+60.13	75.03 LT	210.37	43	61+59.50	67.90 LT	210.85	63	60+46.11	76.28 LT	211.20
4	60+38.55	63.45 LT	210.20	24	60+58.59	76.32 LT	210.27	44	61+81.40	87.56 LT	210.09	64	7047.27	40.51 LT	211.32
5	60+39.08	61.52 LT	210.30	25	60+54.56	76.32 LT	210.31	45	61+82.70	89.09 LT	209.99	65	7053.42	40.51 LT	211.23
6	60+30.22	69.09 LT	210.66	26	60+51.15	73.20 LT	210.64	46	61+85.94	92.90 LT	210.09	66	7073.34	42.50 LT	210.95
7	60+36.13	71.08 LT	210.30	27	61+33.84	80.44 LT	210.23	47	61+81.55	97.00 LT	210.59	67	7047.27	34.92 LT	211.43
8	60+40.85	72.73 LT	210.33	28	61+35.63	81.32 LT	210.13	48	61+72.07	102.67 LT	210.19	68	7073.34	37.50 LT	211.05
9	60+44.40	74.57 LT	210.66	29	61+45.05	81.32 LT	210.22	49	61+75.09	105.17 LT	210.38	69	7108.90	42.50 LT	209.78
10	60+44.09	63.24 LT	210.29	30	61+36.85	75.21 LT	210.24	50	61+84.79	100.82 LT	210.69	70	7147.31	44.04 LT	208.46
11	60+43.32	65.09 LT	210.22	31	61+38.51	76.32 LT	210.14	51	61+89.17	96.71 LT	210.19	71	7157.07	44.43 LT	208.12
12	60+42.70	68.09 LT	210.28	32	61+45.05	76.32 LT	210.27	52	6192.99	93.48 LT	210.27	72	7160.40	48.37 LT	207.96
13	60+46.97	70.28 LT	210.56	33	61+48.43	74.18 LT	210.60	53	61+97.76	89.83 LT	210.77	73	7164.00	52.64 LT	207.93
14	60+63.44	92.03 LT	210.85	34	61+47.72	80.55 LT	210.25	54	61+94.52	86.01 LT	210.67	74	7168.00	49.62 LT	207.83
15	60+59.58	82.84 LT	210.37	35	61+51.10	78.41 LT	210.58	55	61+89.75	89.67 LT	210.17	75	7164.39	45.35 LT	207.86
16	60+58.64	81.32 LT	210.34	36	61+62.73	71.71 LT	210.75	56	61+86.51	85.86 LT	210.07	76	7160.90	41.21 LT	208.06
17	60+62.17	81.32 LT	210.29	37	61+65.79	69.13 LT	210.42	57	61+85.22	84.33 LT	210.17	77	7159.48	38.94 LT	208.14
18	60+63.88	80.28 LT	210.35	38	61+69.68	73.73 LT	210.30	58	60+39.60	76.33LT	212.37	78	7147.31	39.04 LT	208.56
19	60+59.80	93.41 LT	210.99	39	61+73.51	70.51 LT	210.36	59	60+40.96	73.33 LT	210.86	79	7108.90	37.50 LT	209.88
20	60+55.31	85.43 LT	210.45	40	61+69.60	65.89 LT	210.48	60	60+43.48	76.16 LT	212.35				

AFC PLANS

	PROJECT	SHEET NO.
	0095-076-299	2B(7)

LIMITED ACCESS HIGHWAY By Resolution of the Highway Commission dated October 4, 1956.
By Resolution of the Highway Commission dated January 18, 1973.
By Resolution of the Commonwealth Transportation Board dated April 19, 2022

PROJECT MANAGER Rimpal Shah, P.E. (703) 259-2362 (NOVA District) _____
SURVEYED BY, DATE B&B Surveying and Mapping, LLC (804) 330-3781, 03/09/2021
DESIGN BY Whitman, Requardt, & Associates, LLP (804) 212-8700 _____.
SUBSURFACE UTILITY BY, DATE Accumark, Inc. (804) 550-7740, 07/07/2021

COMMONWEALTH OF VIRGINIA
MITCHELL F. JOHNSON
Lic. No. 023838
PROFESSIONAL ENGINEER

Mitchell F Johnson
2022.07.13 19:45:49 -04'00'

Whitman, Requardt & Associates
Richmond, Virginia
ROADWAY ENGINEER

REVISED	STATE	STATE ROUTE	STATE PROJECT	SHEET NO.
	VA.	95	0095-076-299,C-501	2B(8)

DESIGN FEATURES RELATING TO CONSTRUCTION OR TO REGULATION AND CONTROL OF TRAFFIC MAY BE SUBJECT TO CHANGE AS DEEMED NECESSARY BY THE DEPARTMENT

STAKING DETAIL
RADIAL POINT DETAILS

LOCATION	OPITZ BASELINE									RADIUS LENGTH (FEET)	CHORD LENGTH (FEET)	CURVE LENGTH (FEET)
	BEGIN RADIUS			MIDPOINT RADIUS			END RADIUS					
Sheet Item	Station	Offset (ft)	Elevation (ft)	Station	Offset (ft)	Elevation (ft)	Station	Offset (ft)	Elevation (ft)			
A	60+30.02	62.07 LT	209.98	60+50.14	68.74 LT	210.24	60+64.02	84.75 LT	210.32	40.00	40.87	42.90
B	60+36.13	71.08 LT	210.30	60+47.11	76.39 LT	210.72	60+55.31	85.43 LT	210.45	32.00	23.95	24.54
C	61+34.08	84.91 LT	210.10	61+36.61	79.44 LT	210.12	61+39.89	74.38 LT	210.16	42.54	12.03	12.07
D	61+69.31	74.06 LT	210.29	61+71.57	72.09 LT	210.33	61+73.91	70.20 LT	210.37	70.12	6.00	6.00
E	61+66.45	106.63 LT	209.54	62+08.71	71.57 LT	210.35	62+62.17	59.00 LT	211.26	120.00	106.92	110.81
F	61+84.79	100.82 LT	210.69	61+91.06	95.07 LT	210.73	61+97.76	89.83 LT	210.77	110.00	17.00	17.02
G	61+49.12	71.38 RT	209.61	61+61.82	53.74 RT	209.96	61+82.47	47.00 RT	210.19	35.00	41.31	44.19
H	60+44.58	4.38 LT	211.51	60+46.64	6.43 LT	211.44	60+44.59	8.49 LT	211.36	2.06	4.11	6.46
I	71+59.15	53.38 LT	208.02	71+61.67	53.64 LT	207.98	71+64.00	52.64 LT	207.93	5.00	4.91	5.13
J	71+72.23	46.70 LT	207.74	71+73.87	42.29 LT	207.72	71+70.18	39.37 LT	207.44	4.00	7.61	10.07

*ALL POINTS TAKEN AT THE FACE OF CURB.

AFC PLANS

	PROJECT	SHEET NO.
	0095-076-299	2B(8)

Cell Revised 12/1/12

7/11/2022 4589300100218(9).DGN
9:13:02 AM Plotted By: jlopez-ornelas

LIMITED ACCESS HIGHWAY By Resolution of the Highway Commission dated October 4, 1956.
By Resolution of the Highway Commission dated January 18, 1973.
By Resolution of the Commonwealth Transportation Board dated April 19, 2022

PROJECT MANAGER Rimpal Shah, P.E. (703) 259-2362 (NOVA District)
SURVEYED BY, DATE B&B Surveying and Mapping, LLC (804) 330-3781, 03/09/2021
DESIGN BY Whitman, Requardt, & Associates, LLP (804) 212-8700
SUBSURFACE UTILITY BY, DATE Accumark, Inc. (804) 550-7740, 07/07/2021

GENERATOR H118A SITE
GRADING PLAN

COMMONWEALTH OF VIRGINIA
MITCHELL F. JOHNSON
Lic. No. 023838
PROFESSIONAL ENGINEER

Mitchell F Johnson
2022.07.13 19:46:08 -04'00'

Whitman, Requardt & Associates
Richmond, Virginia
ROADWAY ENGINEER

REVISED	STATE	STATE ROUTE	STATE PROJECT	SHEET NO.
	VA.	95	0095-076-299,C-501	2B(9)

DESIGN FEATURES RELATING TO CONSTRUCTION OR TO REGULATION AND CONTROL OF TRAFFIC MAY BE SUBJECT TO CHANGE AS DEEMED NECESSARY BY THE DEPARTMENT

SBL STA. 333+23.73
99.79' LT
ELEV. 168.66'

SBL STA. 333+50.02
101.27' LT
ELEV. 168.83'

SBL STA. 333+75.02
103.66' LT
ELEV. 168.94'

SBL STA. 333+97.66
105.82' LT
ELEV. 169.04'

SBL STA. 334+74.62
110.09' LT
ELEV. 169.44'

SBL STA. 332+99.83
99.82' LT
ELEV. 168.43'

EXISTING RW

BEGIN PAD
SBL STA. 333+97.72
105.20' LT
ELEV. 169.04'

SBL STA. 334+62.40
111.64' LT
ELEV. 169.37'

12" EXISTING GAS LINE

EXISTING ELECTRICAL LINES

24" EXISTING WATER LINE

SBL STA. 334+82.58
110.88' LT
ELEV. 169.48'

EXISTING COMMUNICATION LINES

0.5%

C 2

SBL STA. 332+99.70
76.76' LT
ELEV. 168.55'

TIE GRAVEL EDGE FLUSH
TO EXISTING ASPHALT

100.8'

SBL STA. 333+23.70
76.82' LT
ELEV. 168.79'

SBL STA. 333+49.13
76.53' LT
ELEV. 169.00'

MAINTENANCE/ACCESS PATH
AGGREGATE BASE MATERIAL
6 INCH DEPTH

SBL STA. 333+74.53
76.59' LT
ELEV. 168.59'

BEGIN PAD
SBL STA. 333+99.01
92.26' LT
ELEV. 169.11'

SBL STA. 334+00.54
76.94' LT
ELEV. 169.20'

SBL STA. 334+63.69
98.70' LT
ELEV. 169.43'

RAMP

SBL STA. 334+75.36
102.63' LT
ELEV. 169.48'

SBL STA. 334+83.32
103.42' LT
ELEV. 169.52'

CD LANE

I-95 SBL ℄

I-95 SBL

333

334

335

AFC PLANS

SEE SHEET 15(2C2) FOR ADDITIONAL GENERATOR SITE DETAILS
SEE SHEETS 2B(9A) THRU 2B(9F) FOR GENERATOR H118A SITE CROSS SECTIONS

SCALE 0 10' 20'

PROJECT	SHEET NO.
0095-076-299	2B(9)

Cell Revised 12/11/12

7/11/2022
9:43:50 AM

LIMITED ACCESS HIGHWAY

By Resolution of the Highway Commission dated October 4, 1956.
By Resolution of the Highway Commission dated January 18, 1973
By Resolution of the Commonwealth Transportation Board dated April 19, 2022

PROJECT MANAGER Bimpal Shah, P.E. (703) 259-2362 (NOVA District)
SURVEYED BY, DATE H&B Surveying and Mapping, LLC (804) 330-3781, 03/09/2021
DESIGN BY Whitman, Requardt, & Associates, LLP (804) 272-8700
SUBSURFACE UTILITY BY, DATE Accumark, Inc. (804) 550-7740, 07/07/2021

CROSS SECTIONS

SCALE 1 IN. = 10 FT (H)
1 IN. = 10 FT (V)

REVISED	STATE	STATE ROUTE	STATE PROJECT	SHEET NO.
	VA.	95	0095-076-299, C-501	2B (9A)

DESIGN FEATURES RELATING TO CONSTRUCTION OR TO REGULATION AND CONTROL OF TRAFFIC MAY BE SUBJECT TO CHANGE AS DEEMED NECESSARY BY THE DEPARTMENT

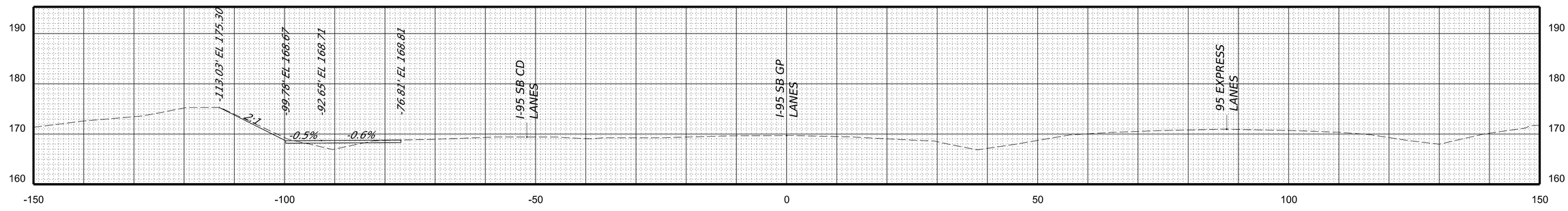

STA 333+25.00

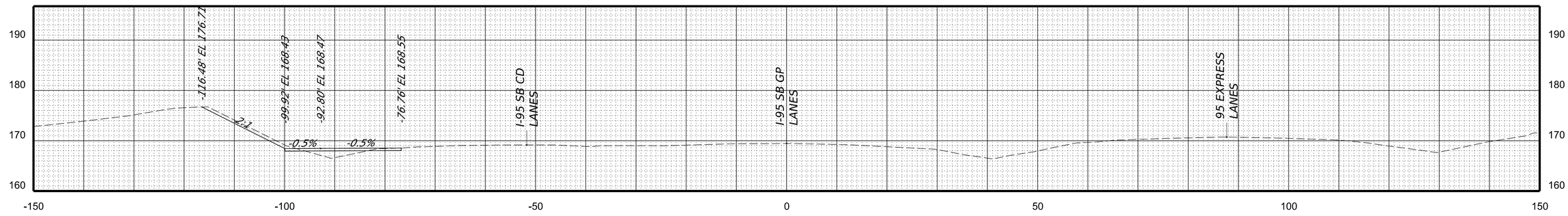

STA 333+00.00

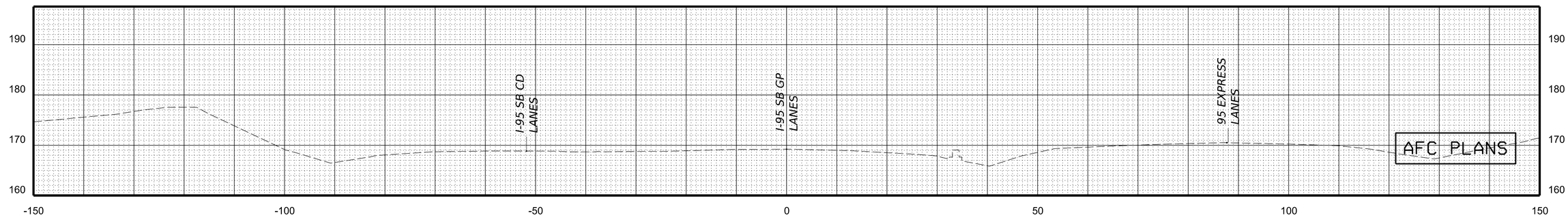

STA 332+75.00

PROJECT	SHEET NO.
0095-076-299	2B(9A)

7/11/2022
9:13:54 AM

LIMITED ACCESS HIGHWAY

By Resolution of the Highway Commission dated October 4, 1956.
By Resolution of the Highway Commission dated January 18, 1973
By Resolution of the Commonwealth Transportation Board dated April 19, 2022

PROJECT MANAGER Bimpal Shah, P.E. (703) 259-2362 (NOVA District)
SURVEYED BY, DATE H&B Surveying and Mapping, LLC (804) 330-3781, 03/09/2021
DESIGN BY Whitman, Requardt, & Associates, LLP (804) 272-8700
SUBSURFACE UTILITY BY, DATE Accumark, Inc. (804) 550-7740, 07/07/2021

CROSS SECTIONS

SCALE 1 IN. = 10 FT (H)
1 IN. = 10 FT (V)

REVISED	STATE	STATE ROUTE	STATE PROJECT	SHEET NO.
	VA.	95	0095-076-299, C-501	2B (9B)

DESIGN FEATURES RELATING TO CONSTRUCTION OR TO REGULATION AND CONTROL OF TRAFFIC MAY BE SUBJECT TO CHANGE AS DEEMED NECESSARY BY THE DEPARTMENT

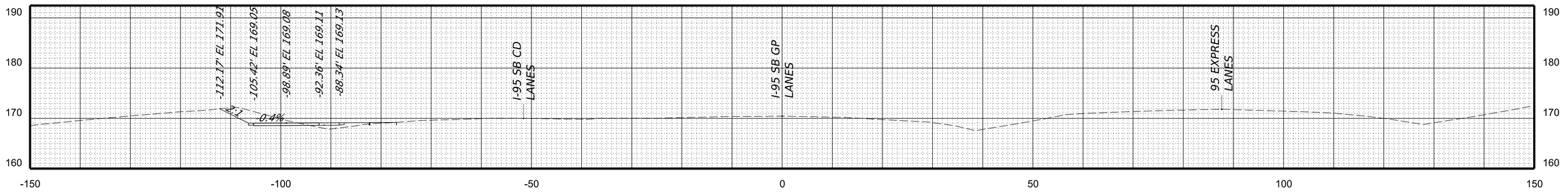

STA 334+00.00

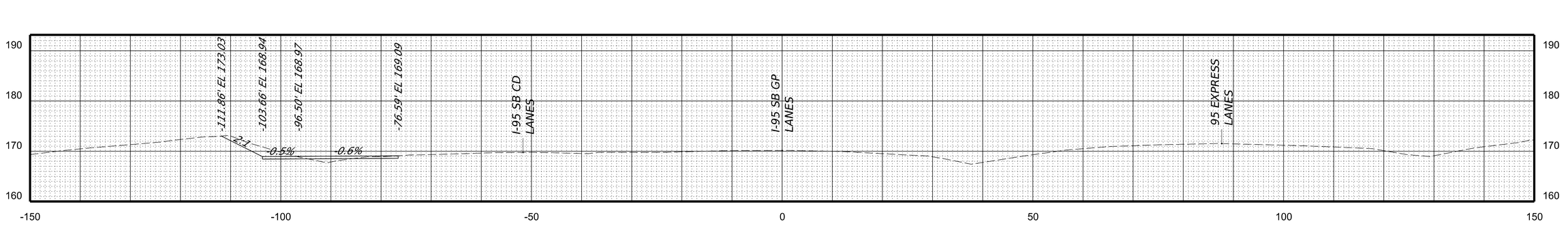

STA 333+75.00

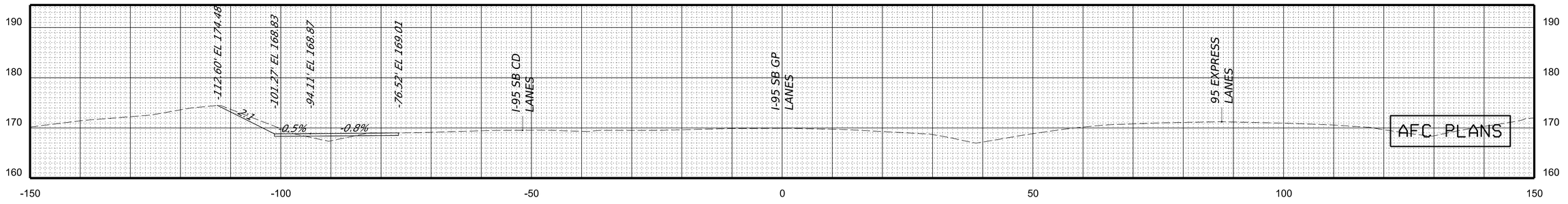

STA 333+50.00

PROJECT	SHEET NO.
0095-076-299	2B(9B)

7/11/2022
9:13:58 AM

LIMITED ACCESS HIGHWAY

By Resolution of the Highway Commission dated October 4, 1956.
By Resolution of the Highway Commission dated January 18, 1973
By Resolution of the Commonwealth Transportation Board dated April 19, 2022

PROJECT MANAGER Bimpal Shah, P.E. (703) 259-2362 (NOVA District)
SURVEYED BY, DATE H&B Surveying and Mapping, LLC (804) 330-3781, 03/09/2021
DESIGN BY Whitman, Requardt, & Associates, LLP (804) 272-8700
SUBSURFACE UTILITY BY, DATE Accumark, Inc. (804) 550-7740, 07/07/2021

CROSS SECTIONS

SCALE 1 IN. = 10 FT (H)
1 IN. = 10 FT (V)

REVISED	STATE	STATE ROUTE	STATE PROJECT	SHEET NO.
	VA.	95	0095-076-299, C-501	2B (9C)

DESIGN FEATURES RELATING TO CONSTRUCTION OR TO REGULATION AND CONTROL OF TRAFFIC MAY BE SUBJECT TO CHANGE AS DEEMED NECESSARY BY THE DEPARTMENT

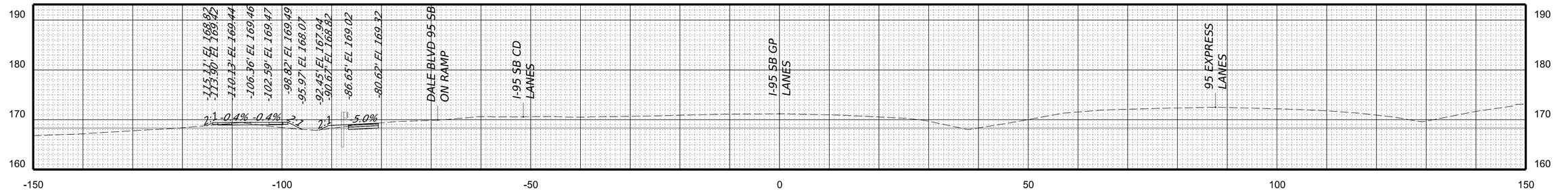

STA 334+75.00

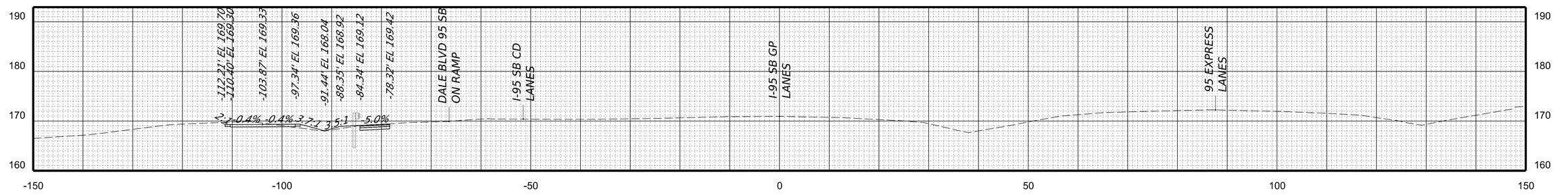

STA 334+50.00

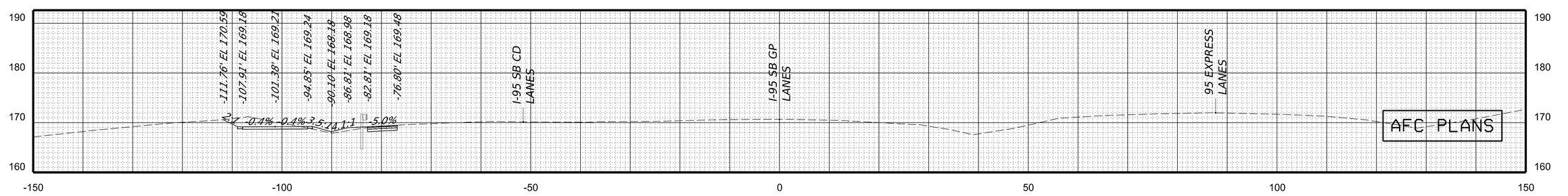

STA 334+25.00

PROJECT	SHEET NO.
0095-076-299	2B(9C)

7/11/2022
9:40:01 AM

LIMITED ACCESS HIGHWAY

By Resolution of the Highway Commission dated October 4, 1956.
By Resolution of the Highway Commission dated January 18, 1973
By Resolution of the Commonwealth Transportation Board dated April 19, 2022

PROJECT MANAGER Bimpal Shah, P.E. (703) 259-2362 (NOVA District)
SURVEYED BY, DATE H&B Surveying and Mapping, LLC (804) 330-3781, 03/09/2021
DESIGN BY Whitman, Requardt, & Associates, LLP (804) 272-8700
SUBSURFACE UTILITY BY, DATE Accumark, Inc. (804) 550-7740, 07/07/2021

CROSS SECTIONS

SCALE 1 IN. = 10 FT (H)
1 IN. = 10 FT (V)

REVISED	STATE	STATE ROUTE	STATE PROJECT	SHEET NO.
	VA.	95	0095-076-299, C-501	2B (9D)

DESIGN FEATURES RELATING TO CONSTRUCTION OR TO REGULATION AND CONTROL OF TRAFFIC MAY BE SUBJECT TO CHANGE AS DEEMED NECESSARY BY THE DEPARTMENT

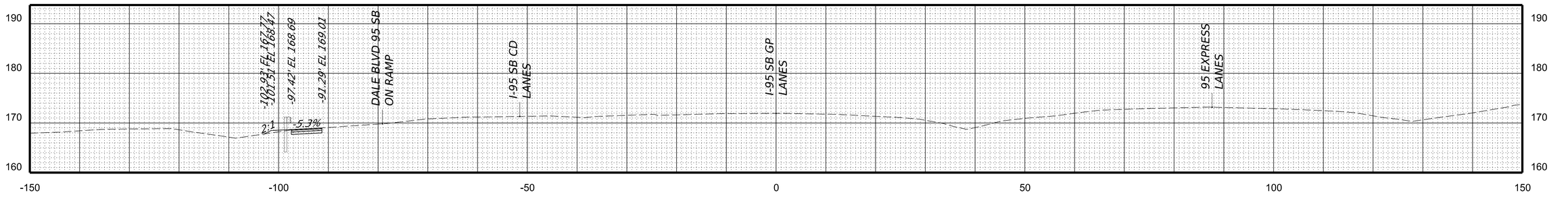

STA 335+50.00

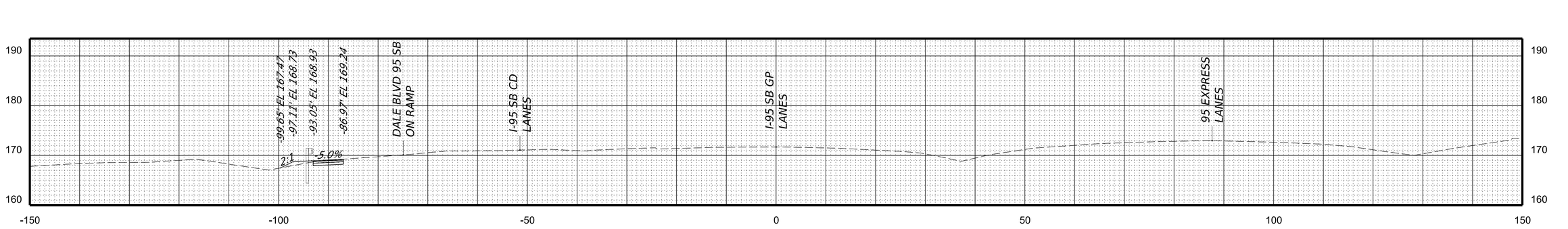

STA 335+25.00

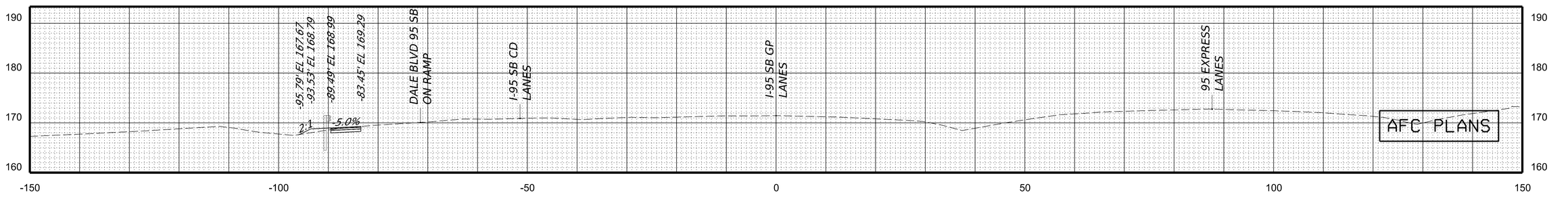

STA 335+00.00

PROJECT	SHEET NO.
0095-076-299	2B(9D)

7/11/2022
9:44:05 AM

LIMITED ACCESS HIGHWAY

By Resolution of the Highway Commission dated October 4, 1956.
By Resolution of the Highway Commission dated January 18, 1973
By Resolution of the Commonwealth Transportation Board dated April 19, 2022

PROJECT MANAGER Bimpal Shah, P.E. (703) 259-2362 (NOVA District)
SURVEYED BY, DATE H&B Surveying and Mapping, LLC (804) 330-3781, 03/09/2021
DESIGN BY Whitman, Requardt, & Associates, LLP (804) 272-8700
SUBSURFACE UTILITY BY, DATE Accumark, Inc. (804) 550-7740, 07/07/2021

CROSS SECTIONS

SCALE 1 IN. = 10 FT (H)
1 IN. = 10 FT (V)

REVISED	STATE	STATE ROUTE	STATE PROJECT	SHEET NO.
	VA.	95	0095-076-299, C-501	2B (9E)

DESIGN FEATURES RELATING TO CONSTRUCTION OR TO REGULATION AND CONTROL OF TRAFFIC MAY BE SUBJECT TO CHANGE AS DEEMED NECESSARY BY THE DEPARTMENT

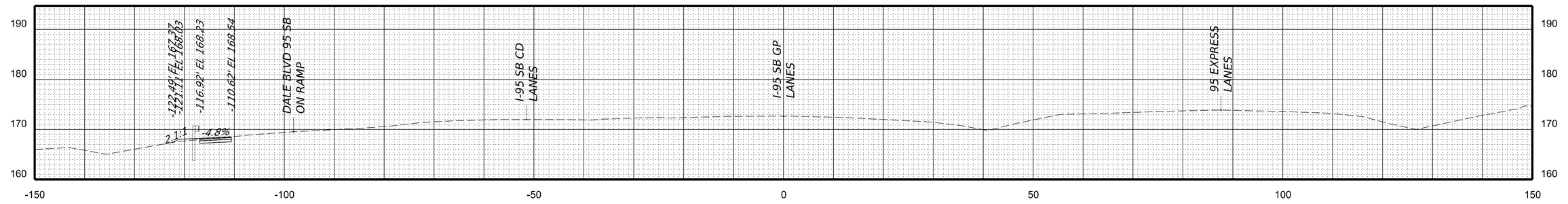

STA 336+25.00

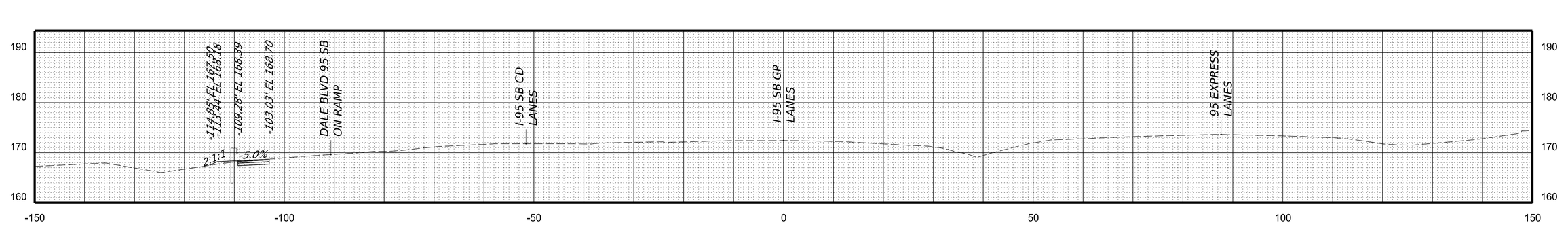

STA 336+00.00

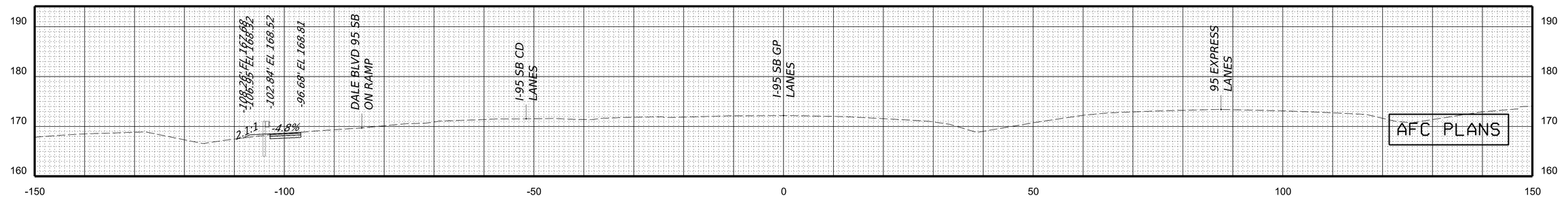

STA 335+75.00

PROJECT	SHEET NO.
0095-076-299	2B(9E)

7/11/2022
9:4:08 AM

LIMITED ACCESS HIGHWAY

By Resolution of the Highway Commission dated October 4, 1956.
By Resolution of the Highway Commission dated January 18, 1973
By Resolution of the Commonwealth Transportation Board dated April 19, 2022

PROJECT MANAGER Bimpal Shah, P.E. (703) 259-2362 (NOVA District)
SURVEYED BY, DATE H&B Surveying and Mapping, LLC (804) 330-3781, 03/09/2021
DESIGN BY Whitman, Requardt, & Associates, LLP (804) 272-8700
SUBSURFACE UTILITY BY, DATE Accumark, Inc. (804) 550-7740, 07/07/2021

CROSS SECTIONS

SCALE 1 IN. = 10 FT (H)
1 IN. = 10 FT (V)

REVISED	STATE	STATE ROUTE	STATE PROJECT	SHEET NO.
	VA.	95	0095-076-299, C-501	2B (9F)

DESIGN FEATURES RELATING TO CONSTRUCTION OR TO REGULATION AND CONTROL OF TRAFFIC MAY BE SUBJECT TO CHANGE AS DEEMED NECESSARY BY THE DEPARTMENT

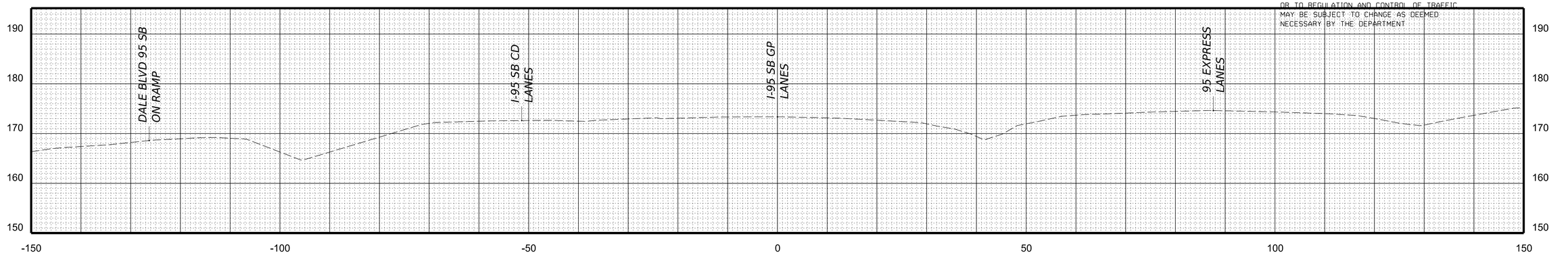

STA 337+00.00

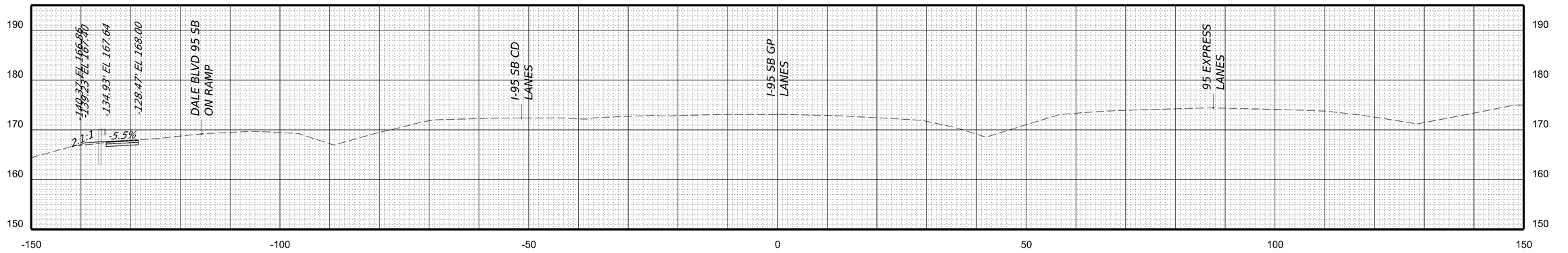

STA 336+75.00

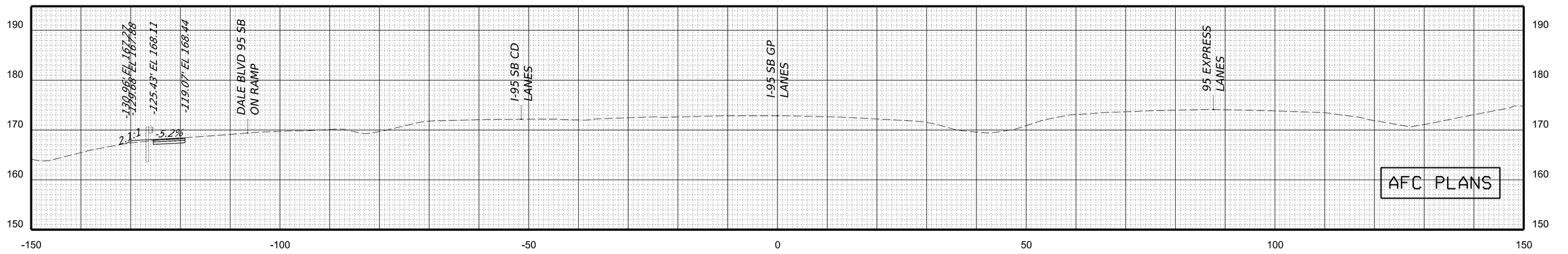

STA 336+50.00

PROJECT	SHEET NO.
0095-076-299	2B(9F)

7/11/2022 4589300I002b(10).DGN
9:15:02 AM Plotted By: jlopez-ornelas

LIMITED ACCESS HIGHWAY By Resolution of the Highway Commission dated October 4, 1956
By Resolution of the Highway Commission dated January 18, 1973
By Resolution of the Commonwealth Transportation Board dated April 19, 2022

PROJECT MANAGER
SURVEYED BY, DATE
DESIGN BY
SUBSURFACE UTILITY BY, DATE

GENERATOR H117A SITE GRADING PLAN

COMMONWEALTH OF VIRGINIA
MITCHELL F. JOHNSON
Lic. No. 023838
PROFESSIONAL ENGINEER

Mitchell F Johnson
2022.07.13 19:47:52 -04'00'
Whitman, Requardt & Associates
Richmond, Virginia
ROADWAY ENGINEER

REVISED	STATE	STATE ROUTE	STATE PROJECT	SHEET NO.
	VA.	95	0095-076-299,C-501	2B(10)

DESIGN FEATURES RELATING TO CONSTRUCTION OR TO REGULATION AND CONTROL OF TRAFFIC MAY BE SUBJECT TO CHANGE AS DEEMED NECESSARY BY THE DEPARTMENT

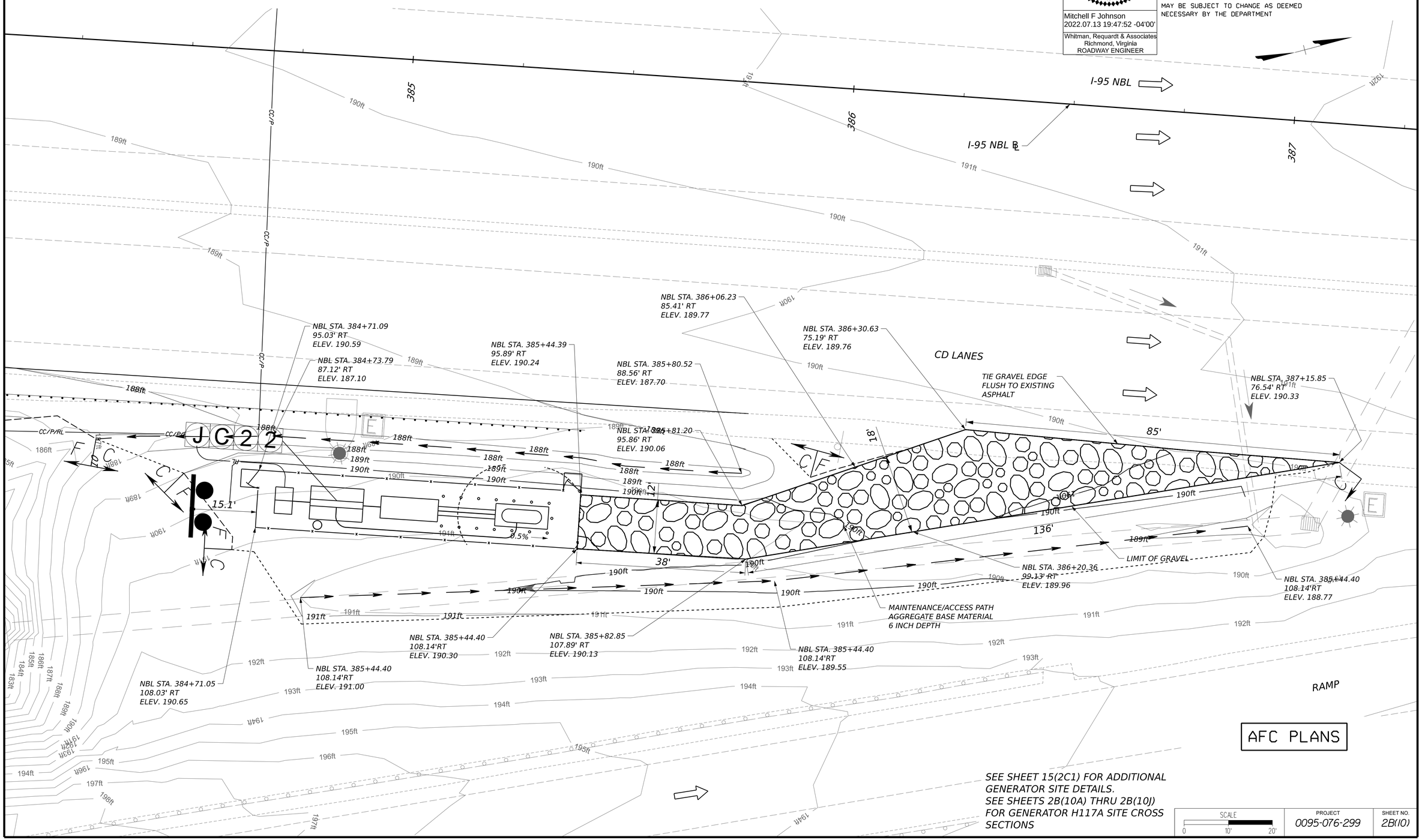

AFC PLANS

SEE SHEET 15(2C1) FOR ADDITIONAL GENERATOR SITE DETAILS.
SEE SHEETS 2B(10A) THRU 2B(10J) FOR GENERATOR H117A SITE CROSS SECTIONS

SCALE	PROJECT	SHEET NO.
0 10' 20'	0095-076-299	2B(10)

Cell Revised 12/11/12

7/11/2022
9:15:42 AM

LIMITED ACCESS HIGHWAY

By Resolution of the Highway Commission dated October 4, 1956.
By Resolution of the Highway Commission dated January 18, 1973
By Resolution of the Commonwealth Transportation Board dated April 19, 2022

PROJECT MANAGER Bimpal Shah, P.E. (703) 259-2362 (NOVA District)
SURVEYED BY, DATE H&B Surveying and Mapping, LLC (804) 330-3781, 03/09/2021
DESIGN BY Whitman, Requardt, & Associates, LLP (804) 272-8700
SUBSURFACE UTILITY BY, DATE Accumark, Inc. (804) 550-7740, 07/07/2021

CROSS SECTIONS

SCALE 1 IN. = 10 FT (H)
1 IN. = 10 FT (V)

REVISED	STATE	STATE ROUTE	STATE PROJECT	SHEET NO.
	VA.	95	0095-076-299, C-501	2B (10A)

DESIGN FEATURES RELATING TO CONSTRUCTION OR TO REGULATION AND CONTROL OF TRAFFIC MAY BE SUBJECT TO CHANGE AS DEEMED NECESSARY BY THE DEPARTMENT

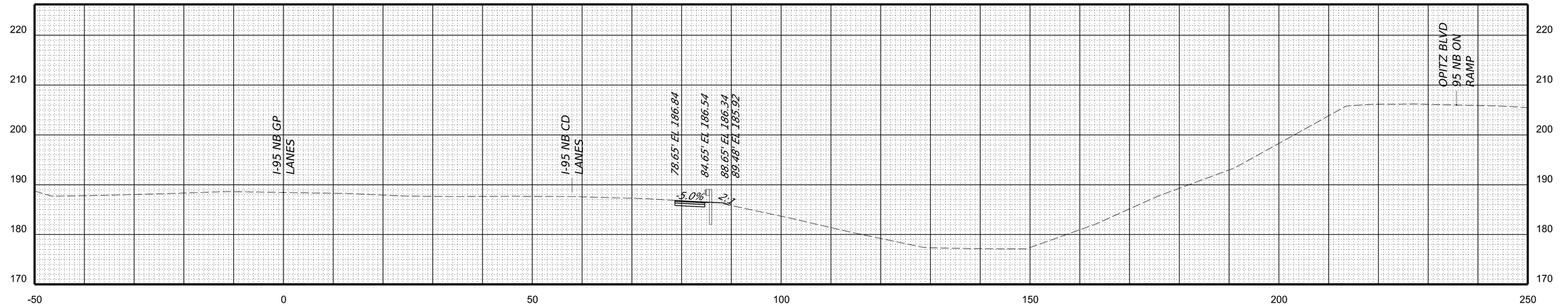

STA 382+50.00

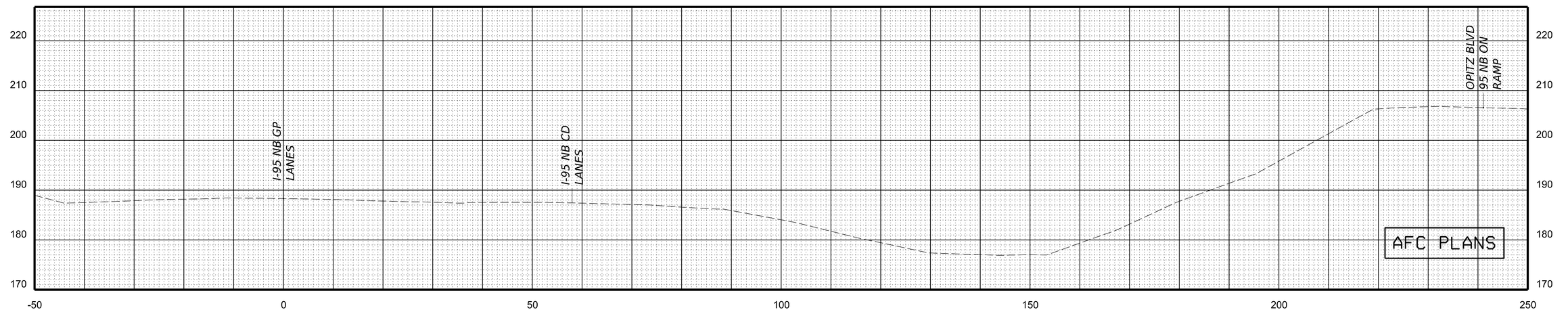

STA 382+25.00

AFC PLANS

PROJECT	SHEET NO.
0095-076-299	2B(10A)

7/11/2022
9:15:44 AM

LIMITED ACCESS HIGHWAY

By Resolution of the Highway Commission dated October 4, 1956.
By Resolution of the Highway Commission dated January 18, 1973
By Resolution of the Commonwealth Transportation Board dated April 19, 2022

PROJECT MANAGER Bimpal Shah, P.E. (703) 259-2362 (NOVA District)
SURVEYED BY, DATE H&B Surveying and Mapping, LLC (804) 330-3781, 03/09/2021
DESIGN BY Whitman, Requardt, & Associates, LLP (804) 272-8700
SUBSURFACE UTILITY BY, DATE Accumark, Inc. (804) 550-7740, 07/07/2021

CROSS SECTIONS

SCALE 1 IN. = 10 FT (H)
1 IN. = 10 FT (V)

REVISED	STATE	STATE ROUTE	STATE PROJECT	SHEET NO.
	VA.	95	0095-076-299, C-501	2B (10B)

DESIGN FEATURES RELATING TO CONSTRUCTION OR TO REGULATION AND CONTROL OF TRAFFIC MAY BE SUBJECT TO CHANGE AS DEEMED NECESSARY BY THE DEPARTMENT

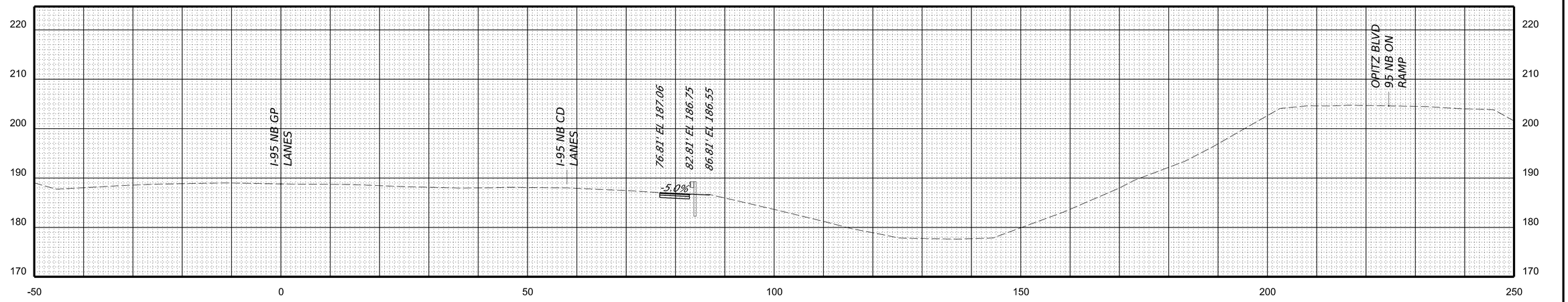

STA 383+00.00

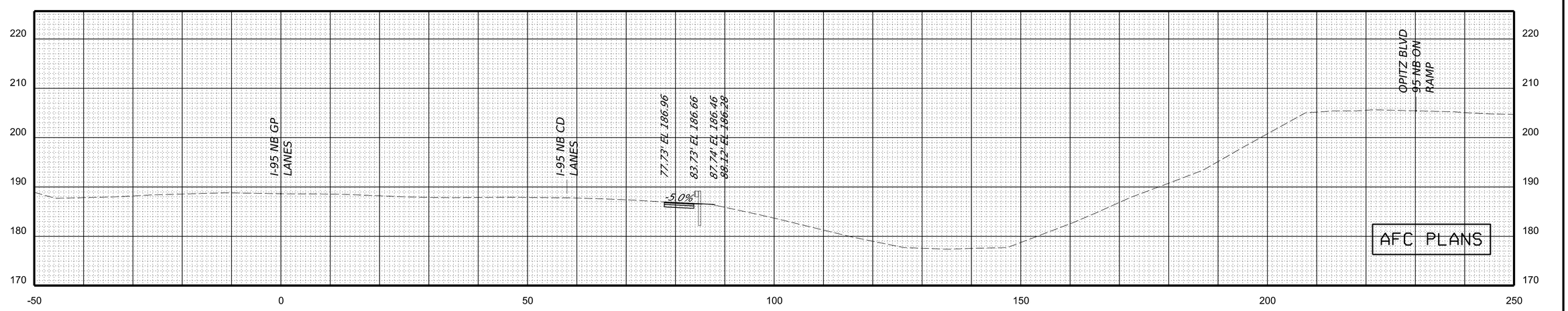

STA 382+75.00

PROJECT	SHEET NO.
0095-076-299	2B(10B)

7/11/2022
9:15:45 AM

LIMITED ACCESS HIGHWAY

By Resolution of the Highway Commission dated October 4, 1956.
By Resolution of the Highway Commission dated January 18, 1973
By Resolution of the Commonwealth Transportation Board dated April 19, 2022

PROJECT MANAGER Bimpal Shah, P.E. (703) 259-2362 (NOVA District)
SURVEYED BY, DATE H&B Surveying and Mapping, LLC (804) 330-3781, 03/09/2021
DESIGN BY Whitman, Requardt, & Associates, LLP (804) 272-8700
SUBSURFACE UTILITY BY, DATE Accumark, Inc. (804) 550-7740, 07/07/2021

CROSS SECTIONS

SCALE 1 IN. = 10 FT (H)
1 IN. = 10 FT (V)

REVISED	STATE	STATE ROUTE	STATE PROJECT	SHEET NO.
	VA.	95	0095-076-299, C-501	2B (10C)

DESIGN FEATURES RELATING TO CONSTRUCTION OR TO REGULATION AND CONTROL OF TRAFFIC MAY BE SUBJECT TO CHANGE AS DEEMED NECESSARY BY THE DEPARTMENT

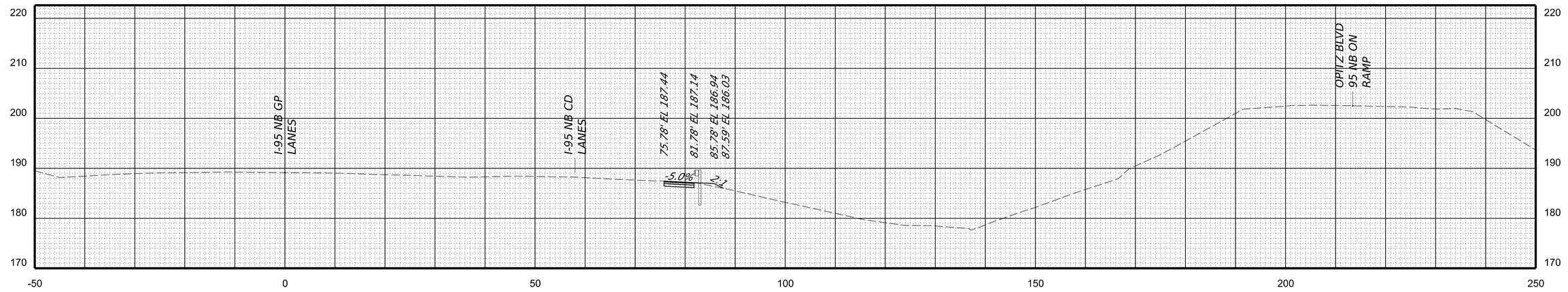

STA 383+50.00

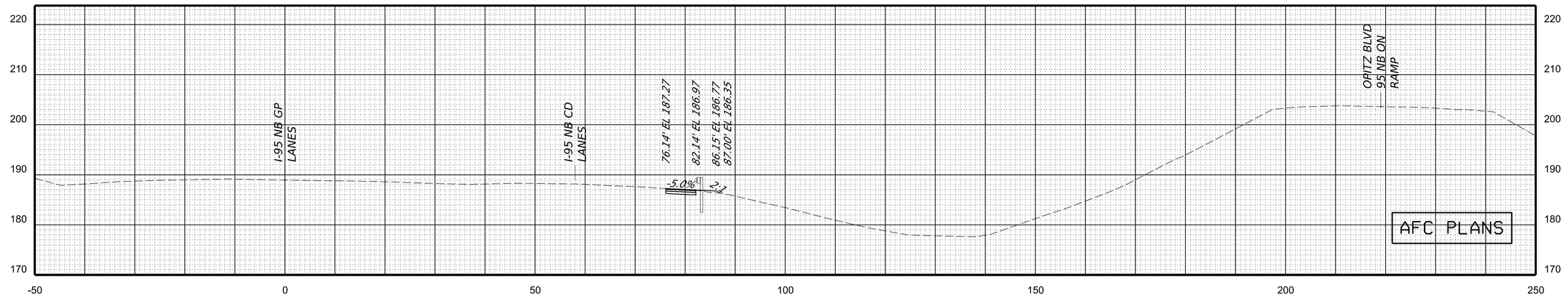

STA 383+25.00

PROJECT	SHEET NO.
0095-076-299	2B(10C)

LIMITED ACCESS HIGHWAY

By Resolution of the Highway Commission dated October 4, 1956.
By Resolution of the Highway Commission dated January 18, 1973
By Resolution of the Commonwealth Transportation Board dated April 19, 2022

PROJECT MANAGER Bimpal Shah, P.E. (703) 259-2362 (NOVA District)
SURVEYED BY, DATE H&B Surveying and Mapping, LLC (804) 330-3781, 03/09/2021
DESIGN BY Whitman, Requardt, & Associates, LLP (804) 272-8700
SUBSURFACE UTILITY BY, DATE Accumark, Inc. (804) 550-7740, 07/07/2021

CROSS SECTIONS

SCALE 1 IN. = 10 FT (H)
1 IN. = 10 FT (V)

REVISED	STATE	STATE ROUTE	STATE PROJECT	SHEET NO.
	VA.	95	0095-076-299, C-501	2B (10D)

DESIGN FEATURES RELATING TO CONSTRUCTION OR TO REGULATION AND CONTROL OF TRAFFIC MAY BE SUBJECT TO CHANGE AS DEEMED NECESSARY BY THE DEPARTMENT

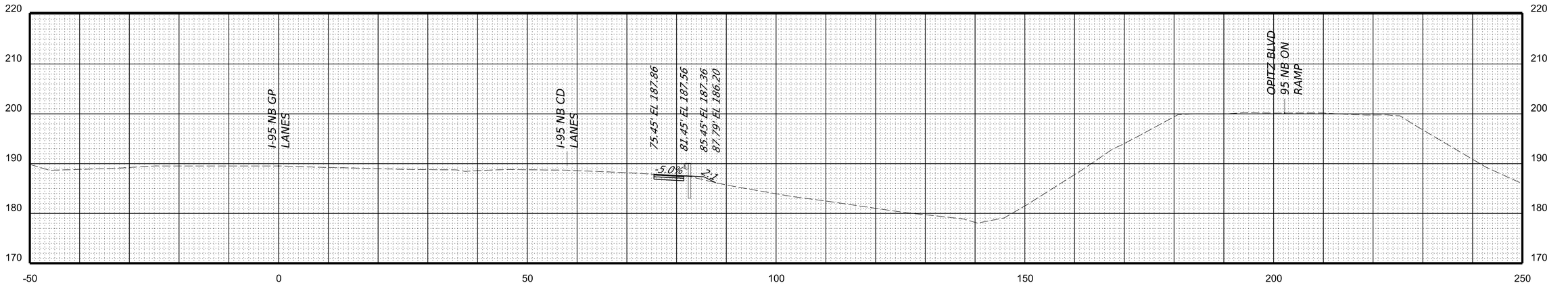

STA 384+00.00

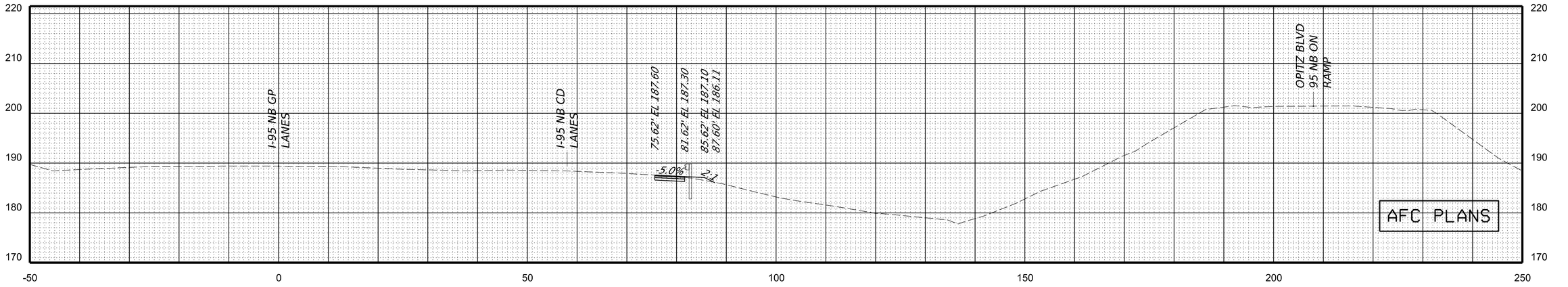

STA 383+75.00

PROJECT	SHEET NO.
0095-076-299	2B(10D)

7/11/2022
9:15:49 AM

LIMITED ACCESS HIGHWAY

By Resolution of the Highway Commission dated October 4, 1956.
By Resolution of the Highway Commission dated January 18, 1973
By Resolution of the Commonwealth Transportation Board dated April 19, 2022

PROJECT MANAGER Bimpal Shah, P.E. (703) 259-2362 (NOVA District)
SURVEYED BY, DATE H&B Surveying and Mapping, LLC (804) 330-3781, 03/09/2021
DESIGN BY Whitman, Requardt, & Associates, LLP (804) 272-8700
SUBSURFACE UTILITY BY, DATE Accumark, Inc. (804) 550-7740, 07/07/2021

CROSS SECTIONS

SCALE 1 IN. = 10 FT (H)
1 IN. = 10 FT (V)

REVISED	STATE	STATE ROUTE	STATE PROJECT	SHEET NO.
	VA.	95	0095-076-299, C-501	2B (10E)

DESIGN FEATURES RELATING TO CONSTRUCTION OR TO REGULATION AND CONTROL OF TRAFFIC MAY BE SUBJECT TO CHANGE AS DEEMED NECESSARY BY THE DEPARTMENT

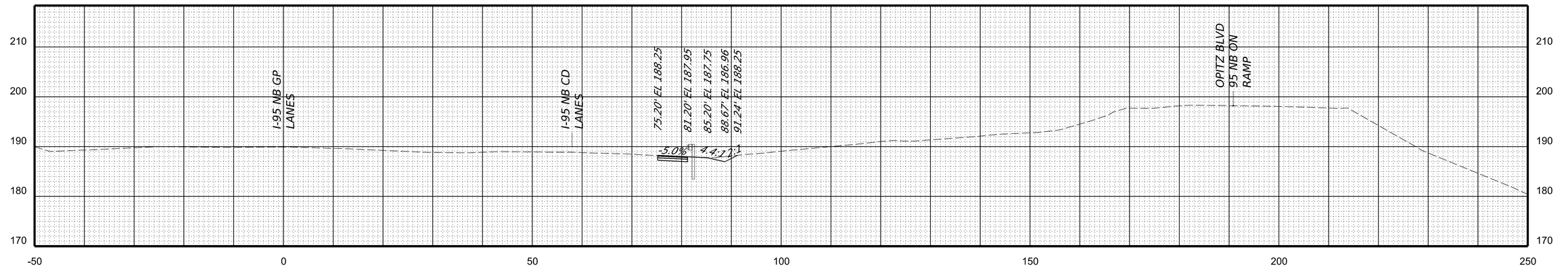

STA 384+50.00

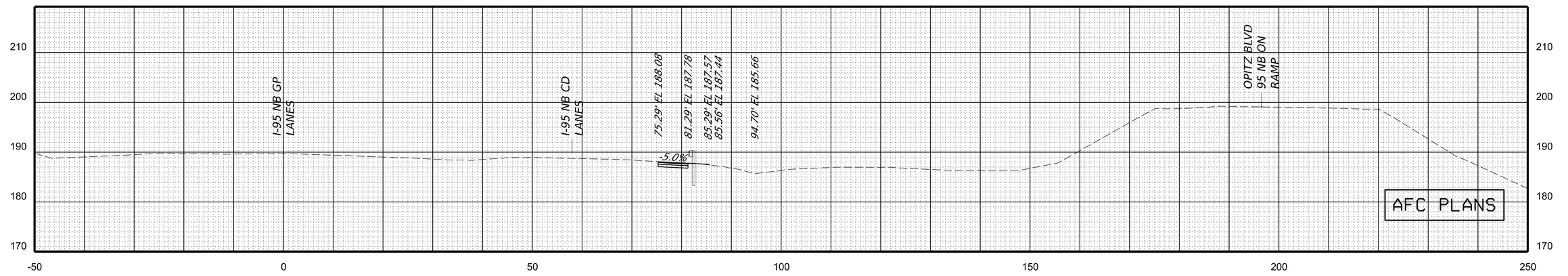

STA 384+25.00

AFC PLANS

PROJECT	SHEET NO.
0095-076-299	2B(10E)

7/11/2022
9:15:57 AM

LIMITED ACCESS HIGHWAY

By Resolution of the Highway Commission dated October 4, 1956.
By Resolution of the Highway Commission dated January 18, 1973
By Resolution of the Commonwealth Transportation Board dated April 19, 2022

PROJECT MANAGER Bimpal Shah, P.E. (703) 259-2362 (NOVA District)
SURVEYED BY, DATE H&B Surveying and Mapping, LLC (804) 330-3781, 03/09/2021
DESIGN BY Whitman, Requardt, & Associates, LLP (804) 272-8700
SUBSURFACE UTILITY BY, DATE Accumark, Inc. (804) 550-7740, 07/07/2021

CROSS SECTIONS

SCALE 1 IN. = 10 FT (H)
1 IN. = 10 FT (V)

REVISED	STATE	STATE ROUTE	STATE PROJECT	SHEET NO.
	VA.	95	0095-076-299, C-501	2B (10F)

DESIGN FEATURES RELATING TO CONSTRUCTION
OR TO REGULATION AND CONTROL OF TRAFFIC
MAY BE SUBJECT TO CHANGE AS DEEMED
NECESSARY BY THE DEPARTMENT

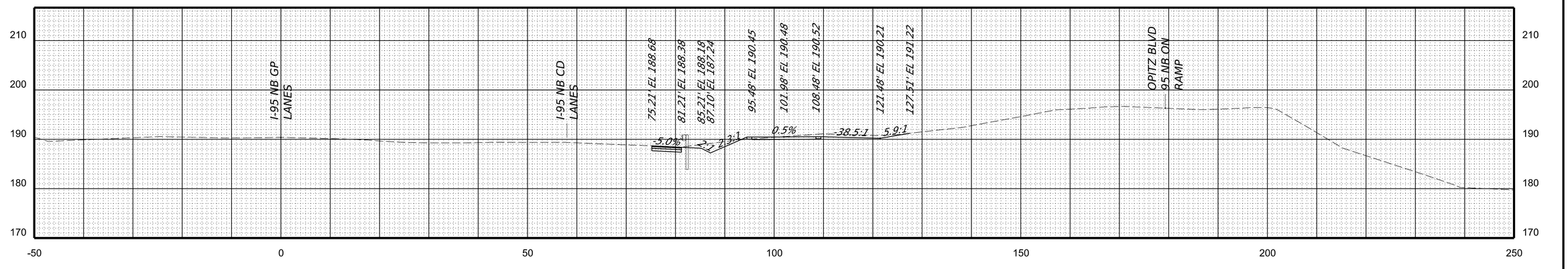

STA 385+00.00

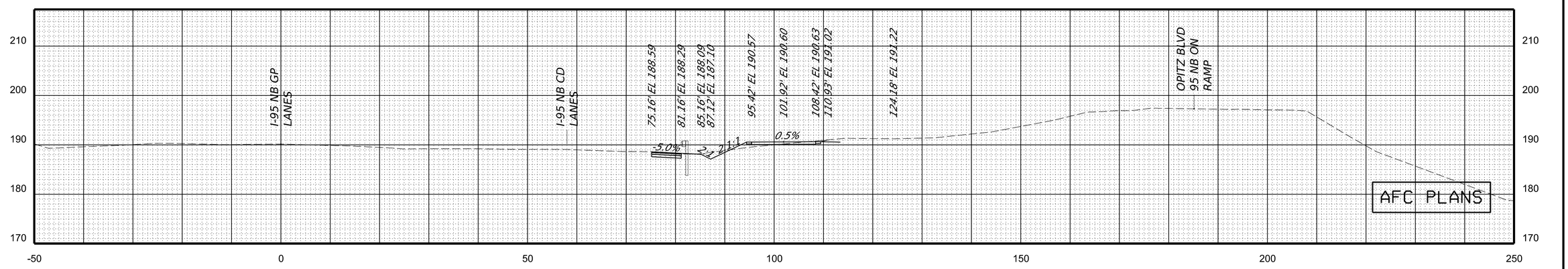

STA 384+75.00

PROJECT	SHEET NO.
0095-076-299	2B(10F)

7/11/2022
9:15:59 AM

LIMITED ACCESS HIGHWAY

By Resolution of the Highway Commission dated October 4, 1956.
By Resolution of the Highway Commission dated January 18, 1973
By Resolution of the Commonwealth Transportation Board dated April 19, 2022

PROJECT MANAGER Bimpal Shah, P.E. (703) 259-2362 (NOVA District)
SURVEYED BY, DATE H&B Surveying and Mapping, LLC (804) 330-3781, 03/09/2021
DESIGN BY Whitman, Requardt, & Associates, LLP (804) 272-8700
SUBSURFACE UTILITY BY, DATE Accumark, Inc. (804) 550-7740, 07/07/2021

CROSS SECTIONS

SCALE 1 IN. = 10 FT (H)
1 IN. = 10 FT (V)

REVISED	STATE	STATE ROUTE	STATE PROJECT	SHEET NO.
	VA.	95	0095-076-299, C-501	2B (10G)

DESIGN FEATURES RELATING TO CONSTRUCTION OR TO REGULATION AND CONTROL OF TRAFFIC MAY BE SUBJECT TO CHANGE AS DEEMED NECESSARY BY THE DEPARTMENT

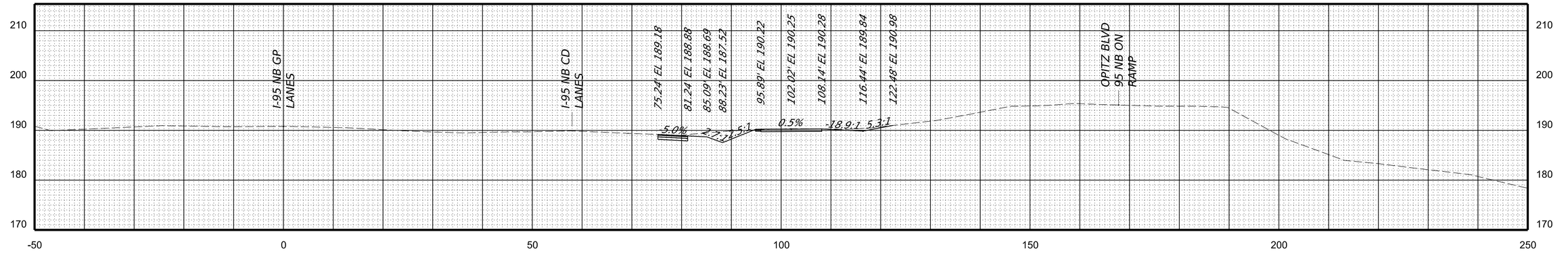

STA 385+50.00

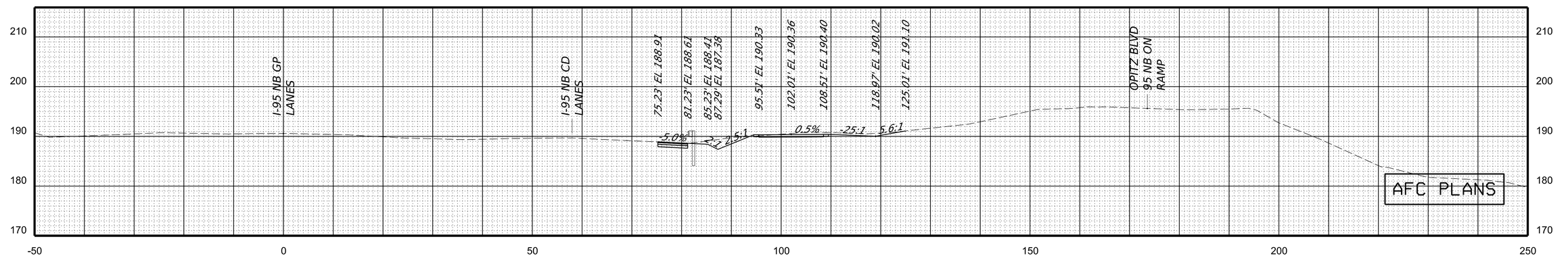

STA 385+25.00

PROJECT	SHEET NO.
0095-076-299	2B(10G)

7/11/2022
9:16:01 AM

LIMITED ACCESS HIGHWAY

By Resolution of the Highway Commission dated October 4, 1956.
By Resolution of the Highway Commission dated January 18, 1973
By Resolution of the Commonwealth Transportation Board dated April 19, 2022

PROJECT MANAGER Bimpal Shah, P.E. (703) 259-2362 (NOVA District)
SURVEYED BY, DATE H&B Surveying and Mapping, LLC (804) 330-3781, 03/09/2021
DESIGN BY Whitman, Requardt, & Associates, LLP (804) 272-8700
SUBSURFACE UTILITY BY, DATE Accumark, Inc. (804) 550-7740, 07/07/2021

CROSS SECTIONS

SCALE 1 IN. = 10 FT (H)
1 IN. = 10 FT (V)

REVISED	STATE	STATE ROUTE	STATE PROJECT	SHEET NO.
	VA.	95	0095-076-299, C-501	2B (10H)

DESIGN FEATURES RELATING TO CONSTRUCTION OR TO REGULATION AND CONTROL OF TRAFFIC MAY BE SUBJECT TO CHANGE AS DEEMED NECESSARY BY THE DEPARTMENT

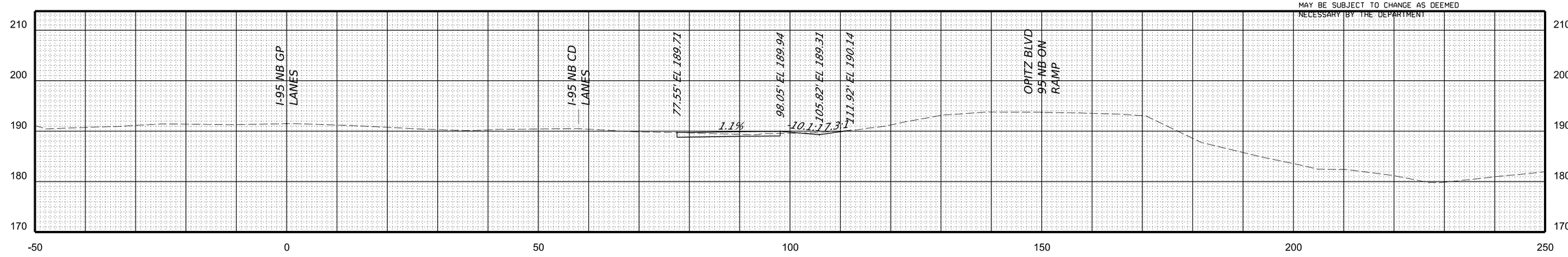

STA 386+25.00

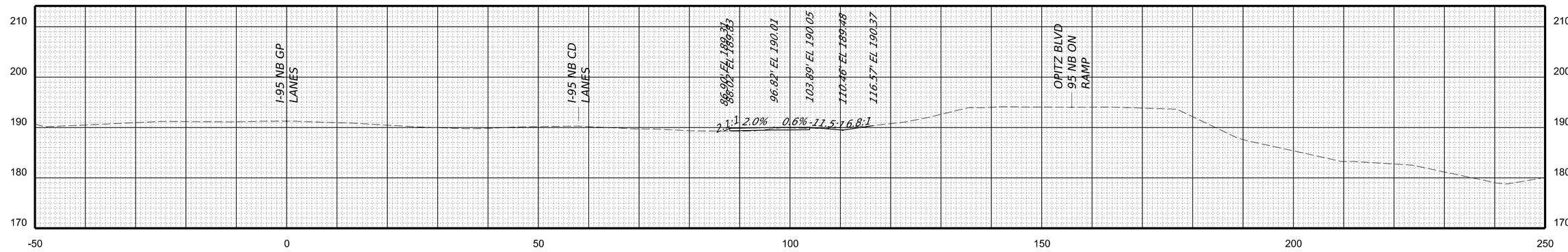

STA 386+00.00

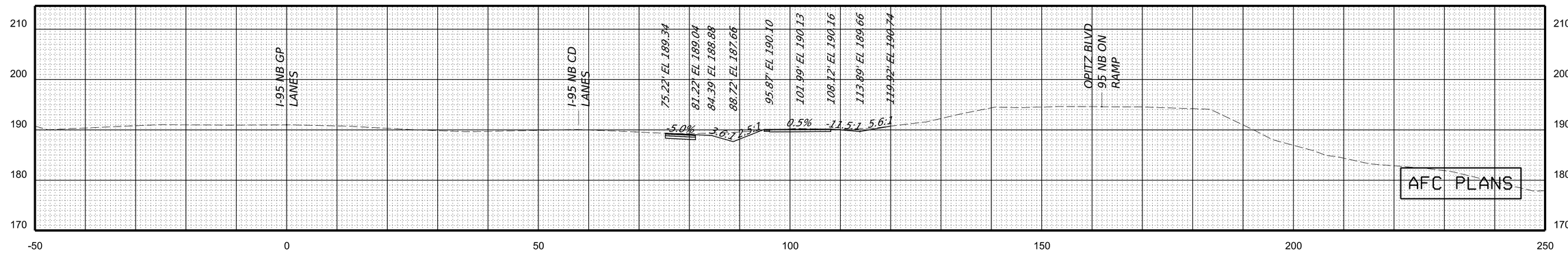

STA 385+75.00

PROJECT	SHEET NO.
0095-076-299	2B(10H)

7/11/2022
9:16:04 AM

LIMITED ACCESS HIGHWAY

By Resolution of the Highway Commission dated October 4, 1956.
By Resolution of the Highway Commission dated January 18, 1973
By Resolution of the Commonwealth Transportation Board dated April 19, 2022

PROJECT MANAGER Bimpal Shah, P.E. (703) 259-2362 (NOVA District)
SURVEYED BY, DATE H&B Surveying and Mapping, LLC (804) 330-3781, 03/09/2021
DESIGN BY Whitman, Requardt, & Associates, LLP (804) 272-8700
SUBSURFACE UTILITY BY, DATE Accumark, Inc. (804) 550-7740, 07/07/2021

CROSS SECTIONS

SCALE 1 IN. = 10 FT (H)
1 IN. = 10 FT (V)

REVISED	STATE	STATE ROUTE	STATE PROJECT	SHEET NO.
	VA.	95	0095-076-299, C-501	2B (101)

DESIGN FEATURES RELATING TO CONSTRUCTION OR TO REGULATION AND CONTROL OF TRAFFIC MAY BE SUBJECT TO CHANGE AS DEEMED NECESSARY BY THE DEPARTMENT

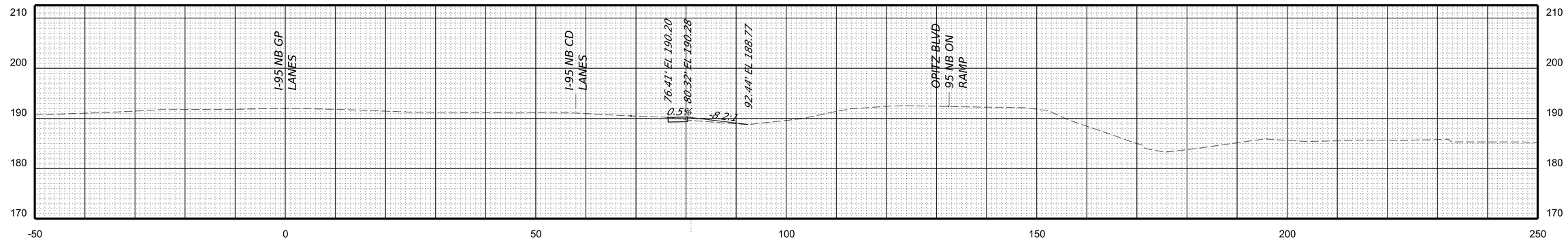

STA 387+00.00

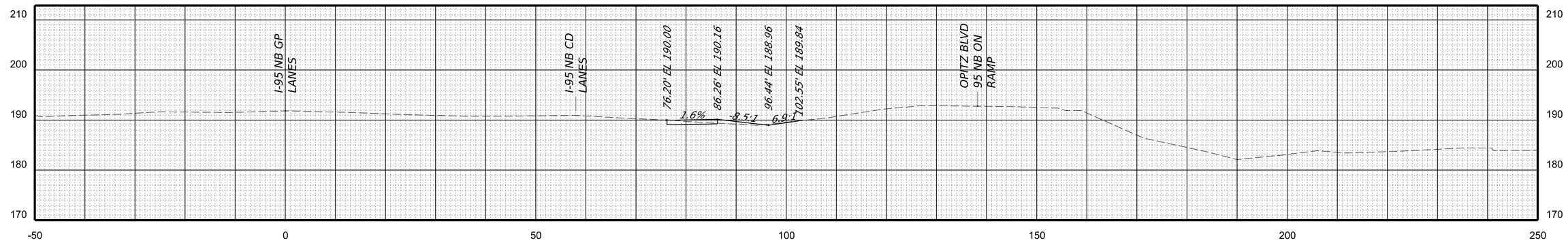

STA 386+75.00

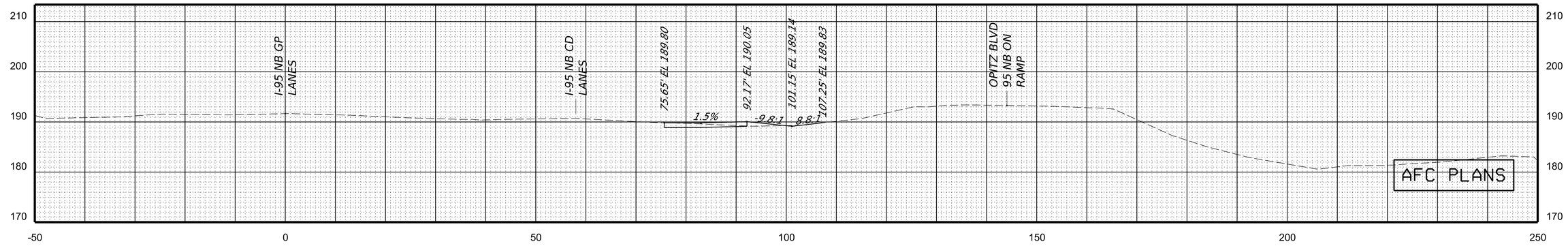

STA 386+50.00

PROJECT	SHEET NO.
0095-076-299	2B(101)

7/11/2022
9:16:06 AM

LIMITED ACCESS HIGHWAY

By Resolution of the Highway Commission dated October 4, 1956.
By Resolution of the Highway Commission dated January 18, 1973
By Resolution of the Commonwealth Transportation Board dated April 19, 2022

PROJECT MANAGER *Bimpal Shah, P.E. (703) 259-2362 (NOVA District)*
SURVEYED BY, DATE *H&B Surveying and Mapping, LLC (804) 330-3781, 03/09/2021*
DESIGN BY *Whitman, Requardt, & Associates, LLP (804) 272-8700*
SUBSURFACE UTILITY BY, DATE *Accumark, Inc. (804) 550-7740, 07/07/2021*

CROSS SECTIONS

SCALE 1 IN. = 10 FT (H)
1 IN. = 10 FT (V)

REVISED	STATE	STATE ROUTE	STATE PROJECT	SHEET NO.
	VA.	95	0095-076-299, C-501	2B (10J)

DESIGN FEATURES RELATING TO CONSTRUCTION
OR TO REGULATION AND CONTROL OF TRAFFIC
MAY BE SUBJECT TO CHANGE AS DEEMED
NECESSARY BY THE DEPARTMENT

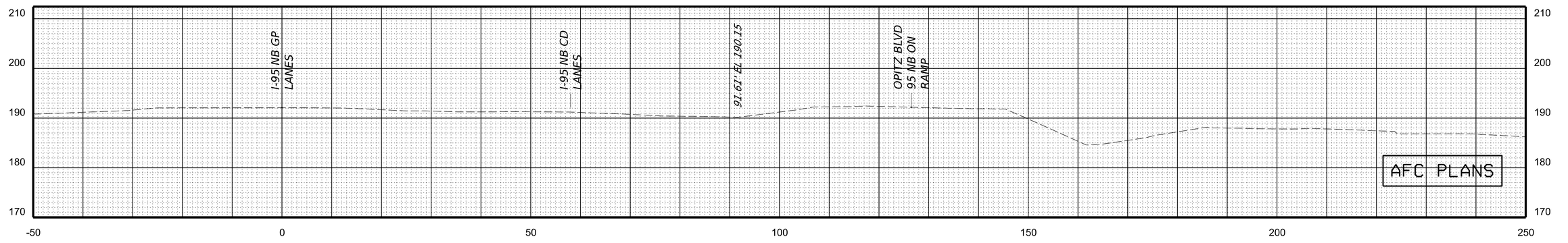

STA 387+25.00

PROJECT	SHEET NO.
0095-076-299	2B(10J)

LIMITED ACCESS HIGHWAY

By Resolution of the Highway Commission dated October 4, 1956.
By Resolution of the Highway Commission dated January 18, 1973.
By Resolution of the Commonwealth Transportation Board dated April 19, 2022

PROJECT MANAGER Rimpal Shah, P.E. (703) 259-2362 (NOVA District) _____
SURVEYED BY, DATE H&B Surveying and Mapping, LLC (804) 330-3781, 03/09/2021
DESIGN BY Whitman, Requardt, & Associates, LLP (804) 212-8700 _____
SUBSURFACE UTILITY BY, DATE Accumark, Inc. (804) 550-7740, 07/07/2021

STORMWATER POLLUTION PREVENTION PLAN (SWPPP) GENERAL INFORMATION SHEET

REVISED	STATE	STATE ROUTE	STATE PROJECT	SHEET NO.
	VA.	95	0095-076-299, C-501	2C(1)

DESIGN FEATURES RELATING TO CONSTRUCTION OR TO REGULATION AND CONTROL OF TRAFFIC MAY BE SUBJECT TO CHANGE AS DEEMED NECESSARY BY THE DEPARTMENT

The information contained in the SWPPP General Information sheets is intended to comply with the requirements of the VPDES General Permit For Discharges Of Stormwater From Construction Activities (the VPDES Construction Permit) issued July 1, 2019 and VDOT's approved Annual ESC and SWM Standards and Specifications.

The SWPPP General Information sheets are to be completed and included in the construction plan set (or other such documents) for land disturbance activities that disturb an area equal to or greater than 10,000 square feet outside the Chesapeake Bay Preservation Area, or equal to or greater than 2,500 square feet in the area defined as Tidewater, Virginia in the Virginia Chesapeake Bay Preservation Act.

The VDOT RLD (as defined in the latest IIM 242) will ensure that the information shown on the SWPPP General Information sheets is updated/revised as necessary in order to reflect changes that may occur during the construction phase of the land disturbing (construction) activity. The updated/revised sheets shall be maintained with the designated record set of plans (or other such documents)for the land disturbance (construction) activity.

I certify under penalty of law that I have read and understand this document and that this document and all attachments were prepared in accordance with a system designed to assure that qualified personnel properly gathered and evaluated the information submitted. Based on my inquiry of the person or persons who manage the system, or those persons directly responsible for gathering the information, the information submitted is, to the best of my knowledge and belief, true, accurate, and complete. I am aware that there are significant penalties for submitting false information, including the possibility of fine and imprisonment for knowing violations.

I further certify that this document and all other documents related to the SWPPP, as identified on the SWPPP General Information Sheets, are maintained at the activity site, or at a location convenient to the activity site where no on-site facilities are available, and such documents will be made available for review upon request in accordance with the provisions of the General VPDES Permit for Discharges of Stormwater from Construction Activities (VAR10) when applicable. Where the SWPPP documents are not stored on-site, a copy of such documents shall be in the possession of those with day to day operational control over the implementation of the SWPPP whenever they are on site.

* or ** Delegated Authority Signature"

Signature: _____
Printed Name: _____
Date:_____

(1) See Section 1, Item 11 relating to delegation of authority, and form LD-445H (Delegation of Authority).

ACRONYMS

CBPA - Chesapeake Bay Preservation Act	SWPPP - Stormwater Pollution Prevention Plan
BMP - Best Management Practice	TMDL - Total Maximum Daily Load
DEQ - Department of Environmental Quality	VDOT - Virginia Department of Transportation
EPA - U.S. Environmental Protection Agency	VPDES - Virginia Pollutant Discharge Elimination System
ESC - Erosion and Sediment Control	VSMP - Virginia Stormwater Management Program
IIM - Instructional and Informational Memorandum	VESCP - Virginia Erosion and Sediment Control Program
R&B - Road and Bridge	WLA - Waste Load Allocation
RLD - Responsible Land Disturber	SWM - Stormwater Management

SECTION I GENERAL INFORMATION

1. Activity Description - This project will construct a new on/off ramp connecting Opitz Blvd. with the I-95 HOT Lanes. The ramp will be constructed on the Opitz Blvd. bridge over I-95 and will require widening and modification to the bridge and adjacent approaches. The proposed ramp will require the closure of a slip ramp from I-95 South into the HOT Lanes, and a new slip ramp will be constructed with this project south of the new on/off ramp.

2. This land disturbance construction activity site is located in Prince William County and approximately 8.67 acres will be disturbed by excavation, grading or other construction activities.

3. A. This proposed activity disturbs one acre or greater and requires coverage under the VPDES General Permit for Discharges Of Stormwater from Construction Activities (the VPDES Construction Permit) as issued by the DEQ. A copy of the VPDES Construction Permit (VAR10), the registration information (LD-445 & LD-445C forms) and the permit coverage letter received from DEQ shall be maintained with other SWPPP documents for this land disturbing activity.

** 4. The location of on-site support facilities that will be covered under the VPDES Construction Permit coverage for this land disturbance (construction) activity shall be provided by the contractor and identified on the record set of plans or in other appropriate contract documents. Support facilities shall include, but not be limited to, borrow and disposal areas, construction and waste material storage areas, equipment and vehicle washing, maintenance, storage and fueling areas, storage areas for fertilizers, fuels or chemicals, concrete wash out areas, sanitary waste facilities and any other areas that may generate a stormwater or non-stormwater discharge directly related to the construction site.

** 5. Written Evidence of permit coverage shall be provided by the contractor for all support activities located outside of VDOT right of way or easement in the form of the Construction General Permit coverage letter: (List VPDES Permit * or Letter from VSMP Authority stating coverage not needed)

6. List the surface waters that have been identified as impaired in the DEQ 2012 305(b)/303(d) Water Quality Assessment Integrated Report for sediment, total suspended solids, turbidity, Nitrogen or Phosphorus. These pollutants are considered benthic impairments: None

7. Identify the TMDL's where stormwater from construction activities discharges into a watershed with a TMDL waste load allocation established and approved by the State Water Control Board prior to July 1, 2016 for sediment, total suspended solids, turbidity, nitrogen or phosphorus: Chesapeake Bay - suspended solids, nitrogen, & phosphorus

8. This land disturbance activity discharges stormwater to the following surface waters that have been identified as exceptional in Section 9VAC25-260-30 A 3 c of the Virginia Administrative Code: Not Applicable

9. Locations of surface waters and locations where concentrated stormwater is discharged from this land disturbance (construction) activity are identified in the construction plan set (or other such documents) for this land disturbance (construction) activity. (List name of surface waters and locations here if not shown in construction plan or other such documents).

10. The ESC and SWM plans (where applicable) for this land disturbance (construction) activity have been developed in accordance with VDOT's Approved Annual Erosion and Sediment Control and Stormwater Management Standards and Specifications as approved by the DEQ.

11. List the RLD and other responsible parties for the land disturbance activity: (required for erosion and sediment control). The following individual(s) have "delegated authority" to sign all reports required by the construction permit including the SWPPP General Information Sheets and Inspection Reports (C-107). Reference form LD-445H for delegation of authority (form 445H for the project is hereby incorporated by reference into this SWPPP). These individual(s) has/have overall responsibility or the environmental matters for the project: (required only for permitted projects):

Name	Position	Responsibility
	RLD	Certify the SWPPP (with date & sig.)
	Certified Inspector	Sign (C-107) Inspection Form Part 1
	Certified Inspector	Sign (C-107) Inspection Form Part 2

* 12. The name of the VDOT individual(s) responsible for the oversight inspection in accordance with IIM-LD-256 on these land disturbance construction activities as identified on these SWPPP General Information Sheets. The names will be updated and maintained with the other SWPPP documents for this land disturbance activity.

VDOT Individuals	Position	Responsibility
Marian Carroll	NPDES	NPDES coordinator responsible for the oversight inspection in accordance with IIM-LD-256
Pawan Sarang	Dist. Hyd. Engineer	District Hydraulic Engineer or designee(s) responsible for the review & the coordination approval of ESC SWM plan modification(s).

* 13. The ESC and P2 inspections for this land disturbing (construction) activity shall follow (Select Schedule 1 or 2, if schedule "2 is used, void note "14) as defined in 2016 R&B Specifications except for Section 107.16(e) 4.an Inspection Requirements Rain gauge notes apply only to Inspection Schedule 1.

** 14. The location of the on-site rain gage that will be used to determine the occurrence of a measurable storm event for the purposes of ESC and Pollution Prevention inspections will be provided by the contractor and identified on the record set of plans or in other appropriate SWPPP documents for this land disturbance activity:
(List location of rain gage).

The rain gage shall be observed daily at "_____" to determine the occurrence of a measurable storm event (i.e., 0.25 inches of rainfall or greater in a 24 hour period). A log book shall be maintained to record observation information which shall include (1) the date, (2) the time, (3) whether or not rainfall is occurring at the time of the observation, (4) the amount of accumulated rainfall in the gage, if any, and (5) whether or not an inspection is required based on the amount of accumulated rainfall in the gage.
If there is no rainfall occurring at the time of the observation, the observation information shall be noted in the log book and the rain gage emptied and replaced. An inspection is required if there is 0.25 inches or more accumulation noted in the rain gage.
If there is rainfall occurring at the time of the observation, the observation information is to be noted in the log book. The rain gage is not to be emptied but left to accumulate additional rainfall until the conclusion of the rainfall event. At the conclusion of the rainfall event, an observation of the rain gage shall be made and the observation information shall be noted in the log book and the rain gage emptied and replaced. An inspection is required if there is 0.25 inches or more accumulation noted in the rain gage.

15. The following VDOT documents are applicable to a) permitted projects b) non-permitted projects in Chesapeake Bay Preservation Areas (CBPA) with 2,500 S.F. to 1.0 acre of land disturbance c) non-permitted projects requiring a SWPPP and d) Non-permitted, Non-CBPA with BMP projects that have a water quantity BMP:

VDOT LD-445: Permitted projects, CBPA projects and Non-permitted, Non-CBPA with BMP projects that have a water quantity BMP and ESC projects > 10,000 s.f. but <1 acre.
VDOT LD-445A: Permitted projects only.
VDOT LD-445C: Projects that require a permit, ESC Plan, or SWPPP.
VDOT LD-445D: Permitted projects, CBPA projects and Non-permitted, Non-CBPA with BMP projects that have a water quantity BMP.
VDOT LD-445F: Emergency work projects (when applicable).
Water Quality Requirement (when applicable)
VDOT LD-445H: Permitted projects only.
VDOT C-107 Part I and Part II. All projects that require a permit or SWPPP.
VDOT LD-445I: AS&S Approval Form (when applicable)

16. If there is an excessive loading of sediment from the project (i.e. more than to be expected from the project with an implemented ESC plan) that is discovered within a local watershed with a sediment TMDL that allocates a WLA to VDOT's MS4, (see note *7) the contractor shall investigate the area of concern at the site within 24 hours of discovery and ensure all erosion and sediment control best management practices are being implemented in accordance with the permits approved standards and specifications required by Part I.B of the current Construction General Permit. If corrective action is necessary, the contractor shall initiate corrective actions no later than 5 business days after the initial investigation.

17. If excessive loading of sediment from a land disturbing activity that is not the responsibility of the contractor is discovered discharging into a MS-4, the contractor shall notify the municipality with jurisdiction over erosion and sediment control activities.

* Denotes information that is to be provided/completed by the RLD.

** Denotes information that is to be provided/completed by the contractor.

AFC PLANS

Revised 5/1/19

NOT TO SCALE	PROJECT 0095-076-299	SHEET NO. 2C(1)

LIMITED ACCESS HIGHWAY By Resolution of the Highway Commission dated October 4, 1956.
By Resolution of the Highway Commission dated January 18, 1973.
By Resolution of the Commonwealth Transportation Board dated April 19, 2022

PROJECT MANAGER Rimpal Shah, P.E. (703) 259-2362 (NOVA District) _____
SURVEYED BY, DATE R&B Surveying and Mapping, LLC (804) 330-3781, 03/09/2021
DESIGN BY Whitman, Requardt, & Associates, LLP (804) 212-8700 _____
SUBSURFACE UTILITY BY, DATE Accumark Inc. (804) 550-7740, 07/07/2021

REVISED	STATE	STATE ROUTE	STATE PROJECT	SHEET NO.
	VA.	95	0095-076-299, C-501	2C(2)

DESIGN FEATURES RELATING TO CONSTRUCTION OR TO REGULATION AND CONTROL OF TRAFFIC MAY BE SUBJECT TO CHANGE AS DEEMED NECESSARY BY THE DEPARTMENT

SECTION II EROSION AND SEDIMENT CONTROL

✱✱ 1. The intended sequence and timing of activities that disturb soils at the site (e.g., grubbing, excavation, grading, utilities and infrastructure installation, etc.) shall be provided by the contractor in accordance with the current edition of Section 108.03 of the VDOT R&B Specifications and shall be included with the other SWPPP documents for this land disturbance (construction) activity.

2. Directions of stormwater flow and approximate slopes anticipated after major grading activities are identified in the construction plan set (or other such documents) for this land disturbance (construction) activity.

3. Areas of soil disturbance and areas of the site which will not be disturbed are identified in the construction plan set (or other such documents) for this land disturbance (construction) activity.

4. Locations of major structural and nonstructural ESC measures intended to filter, settle or similarly remove sediment are identified in the construction plan set (or other such documents) for this land disturbance (construction) activity.

5. Locations where stabilization practices are expected to occur are identified in the construction plan set (or other such documents) for this land disturbance (construction) activity.

6. A description of interim and permanent stabilization practices for the site are identified in the applicable sections of the documents identified in the Note 1 of Section IV.

✱✱ 7. A record of the dates when major grading activities occur, when construction activities temporarily or permanently cease on a portion of the site, and when stabilization measures are initiated will be provided by the contractor and maintained with the record set of plans or other SWPPP documents for this land disturbance (construction) activity: (List how this will be tracked and the location)

8. A description and schedule of procedures to maintain vegetation, erosion and sediment control measures and other protective measures in good and effective operating conditions are identified in the current edition of Sections 107.16 and 303.03 of the VDOT R&B Specifications.

9. Nutrients shall be applied in accordance with the current edition of Sections 603 and 604 of the VDOT Road and Bridge Specifications. Nutrients shall not be applied during rainfall events. Top soil shall be applied in accordance with the current edition of section 602 of the latest Road and Bridge Specifications.

10. All engineering calculations supporting the design of erosion and sediment control measures proposed for this land disturbance (construction) activity are contained in the project drainage file located in the NOVA District Hydraulics Section Office and will be made available for review upon request during normal business hours.

11. The temporary erosion and siltation control items shown on the ESC Plan for this land disturbing (construction) activity are intended to provide a general plan for controlling erosion and sediment within the project limits. The ESC Plan is based on field conditions at the time of plan development and an assumed sequence of construction for the project. The contractor, in conjunction with the VDOT Project Engineer and/or ESC Inspector, shall adjust the location, quantity and type of erosion and sediment control items required based on the actual field conditions encountered at the time of construction and the actual scheduling and sequencing of the construction activities. Significant changes to the proposed ESC Plan (e.g., those that require an engineering analysis, elimination of a perimeter control, change to ESC concept that would affect the quantity or direction of flow of water) shall be submitted to the applicable District Hydraulics Engineer for review and approval. Any changes to the proposed ESC Plan must be noted on the designated record set of plans which shall be retained on the project site and made available upon request during normal business hours.

12. The areas beyond the project's construction limits are to be protected from siltation. Perimeter controls such as silt fence, diversion dikes, turbidity curtains, etc. shall be installed prior to any grubbing operations or other earth moving activities.

13. Temporary earthen structures such as dikes and berms are to be stabilized immediately upon installation. Stabilization may include temporary or permanent seeding, riprap, aggregate, sod, mulching, and/or soil stabilization blankets and matting in conjunction with seeding.

14. All channel relocations are to be constructed during the earliest stage of construction and shall be constructed in accordance with all applicable permit requirements and shall be constructed in the dry wherever possible. Stabilization or vegetation shall be established before flow is redirected through the constructed area as directed by the Engineer.

15. The contractor shall plan and implement his land disturbance operations in order to:
- a. Control the volume and velocity of stormwater runoff within the site to minimize erosion.
- b. Control the peak flow rates, volume and velocity of stormwater discharges to minimize erosion at outlets and in downstream channels.
- c. Minimize the amount of soil exposed.
- d. Minimize the disturbance of steep slopes.
- e. Minimize sediment discharge from the site.
- f. Provide and maintain natural buffers around surface waters, direct stormwater runoff to vegetated areas and maximize stormwater infiltration, unless infeasible.
- g. Minimize soil compaction (except in those areas where compaction is required by the contract documents) and preserve topsoil where feasible.

✱✱ 16. The name of the individual(s) or contractor(s) responsible for the installation and maintenance of the erosion and sediment control measures shall be supplied by the contractor and maintained with the other SWPPP documents for this land disturbance (construction) activity.

17. Soil stockpiles temporarily placed within the project area or on VDOT right of way or easement shall be identified, stabilized, and protected with sediment trapping measures.

18. A construction entrance or other approved measure shall be installed at all locations where construction vehicular traffic access routes intersect a paved or a public road in order to minimize the transport of sediment by vehicular tracking onto the paved surface. Where sediment is transported onto a paved or a public road surface, the road shall be cleaned thoroughly at the end of each work day by shoveling or sweeping. Removed sediment shall be disposed of in accordance with Section 106.04 of the R&B Specifications.

19. Any variance, exception or deviation approved by DEQ must be listed below and supporting documentation (exception/variance/deviation request and DEQ approval) must be maintained with the SWPPP.

The following exceptions to the Water Quantity criteria of the VSMP Regulation have been approved by the DEQ for this land disturbance (construction) activity: (list all approved exceptions and include a brief description of the exception, the date approved and the approving DEQ Office)

Type(1)	Regulation Modified(2)	Approval Date(3)	Description of Variance

(1) Type of modification (Variance from ESC regulations, or Deviation from published guidance)
(2) Section of Regulation or Guidance Document Modified (e.g. ESC Min. Std. 15)
(3) Date that variance/exception/deviation was approved by DEQ.

SECTION III POST CONSTRUCTION STORMWATER MANAGEMENT

Choose the appropriate note 1A or 1B that is applicable to the proposed post construction SWM Plan for this land disturbance (construction) activity. (Delete, strikethrough or mark as NA those notes not applicable.)

1. (Include one of the following notes as appropriate)

~~✱ A. This land disturbance activity is grandfathered under Section 9VAC25-870-48 of the VSMP Regulations and utilizes the Part IIC technical criteria (i.e., Performance or Technology Based, MS 19, etc.) in Section 9VAC25-870-93 et seq. of the VSMP Regulations.~~

✱ B. This land disturbance activity utilizes the Part IIB technical criteria (i.e., Runoff Reduction Method, Energy Balance Equation, etc.) in Section 9VAC25-870-62 et seq. of the VSMP Regulations.

~~2. An exception for (number) pounds of phosphorus removal has been granted for this land disturbance activity by the DEQ in its letter dated (date).~~

3. Any variance, exception or deviation approved by DEQ must be listed below and supporting documentation (exception/variance/deviation request and DEQ approval) must be maintained with the SWPPP.

The following exceptions to the Water Quantity criteria of the VSMP Regulation have been approved by the DEQ for this land disturbance activity: (list all approved exceptions and include a brief description of the exception, the date approved and the approving DEQ Office)

Type(1)	Regulation Modified(2)	Approval Date(3)	Description of Waiver

(1) Type of modification (Variance, or Exception from SWM Regulations or Deviation from published guidance)
(2) Section of Regulation or Guidance Document Modified (e.g. ESC Min. Std. 15)
(3) Date that variance/exception/deviation was approved by DEQ.

4. The permanent onsite SWM facilities or offsite strategies proposed to meet the water quality/quantity requirements for this land disturbance (construction) activity are listed in Section VI.

5. A description of all post-construction stormwater management measures that will be installed during the construction process to control pollutants in stormwater discharges after construction operations have been completed is included in the construction plan set (or other such documents) for this land disturbance (construction) activity.

6. All engineering calculations supporting the design of the post-construction stormwater management measures for this land disturbance (construction) activity, including an explanation of the technical basis used to select the practices, are contained in the project drainage file located in the VDOT NOVA District Hydraulics Section and will be made available for review upon request during normal working business hours.

ACRONYMS

CBPA - Chesapeake Bay Preservation Act
BMP - Best Management Practice
DEQ - Department of Environmental Quality
EPA - U.S. Environmental Protection Agency
ESC - Erosion and Sediment Control
IIM - Instructional and Informational Memorandum
R&B - Road and Bridge
RLD - Responsible Land Disturber
SWPPP - Stormwater Pollution Prevention Plan
TMDL - Total Maximum Daily Load
VDOT - Virginia Department of Transportation
VPDES - Virginia Pollutant Discharge Elimination System
VSMP - Virginia Stormwater Management Program
VESCP - Virginia Erosion and Sediment Control Program
WLA - Waste Load Allocation
SWM - Stormwater Management

✱ Denotes information that is to be provided/ completed by the RLD.

✱✱ Denotes information that is to be provided/completed by the contractor.

AFC PLANS

Revised 5/1/19

NOT TO SCALE	PROJECT 0095-076-299	SHEET NO. 2C(2)

LIMITED ACCESS HIGHWAY

By Resolution of the Highway Commission dated October 4, 1956.
By Resolution of the Highway Commission dated January 18, 1973.
By Resolution of the Commonwealth Transportation Board dated April 19, 2022

PROJECT MANAGER Rimpal Shah, P.E. (703) 259-2362 (NOVA District) _____
SURVEYED BY, DATE H&B Surveying and Mapping, LLC (804) 330-3781, 03/09/2021
DESIGN BY Whitman, Requardt, & Associates, LLP (804) 272-8700 _____
SUBSURFACE UTILITY BY, DATE Accumark, Inc. (804) 550-7740, 07/07/2021

STORMWATER POLLUTION PREVENTION PLAN (SWPPP) GENERAL INFORMATION SHEET

REVISED	STATE	STATE ROUTE	STATE PROJECT	SHEET NO.
	VA.	95	0095-076-299, C-501	2C(3)

DESIGN FEATURES RELATING TO CONSTRUCTION OR TO REGULATION AND CONTROL OF TRAFFIC MAY BE SUBJECT TO CHANGE AS DEEMED

The information contained in the SWPPP General Information sheets is intended to comply with the requirements of the VPDES General Permit For Discharges Of Stormwater From Construction Activities (the VPDES Construction Permit) issued July 1, 2019 and VDOT's approved Annual ESC and SWM Standards and Specifications.

The SWPPP General Information sheets are to be completed and included in the construction plan set (or other such documents) for land disturbance (construction) activities that disturb an area equal to or greater than 10,000 square feet outside the Chesapeake Bay Preservation Area, or equal to or greater than 2,500 square feet in the area defined as Tidewater, Virginia in the Virginia Chesapeake Bay Preservation Act.

The VDOT RLD will ensure that the information shown on the SWPPP General Information sheets is updated/revised as necessary in order to reflect changes that may occur during the construction phase of the land disturbing (construction) activity. The updated/revised sheets shall be maintained with the designated record set of plans (or other such documents) for the land disturbance (construction) activity.

SECTION IV SWPPP

1. All documents related to the SWPPP for this land disturbance (construction) activity shall be maintained at the activity site and shall be readily available for review upon request during normal business hours. Such documents include, but are not limited to, the construction plans (or other such documents), the ESC Plan, the Pollution Prevention Plan, the post construction SWM Plan (if applicable), the VDOT R&B Standards and Specifications, Supplemental Specifications, Special Provisions and Special Provision Copied Notes. Documents related to stormwater pollution prevention which are not a part of those documents referenced above, such as copies of the VPDES Construction Permit coverage letter (when applicable) and the VPDES General Permit For Discharges Of Stormwater From Construction Activities (when applicable) and those required to be developed by the contractor for pollution prevention associated with any on-site support facilities being included in the VPDES Construction Permit coverage for this land disturbance (construction) activity are to be maintained at the activity site with the other SWPPP documents for this land disturbance (construction) activity. Where no facilities are available at the activity site to maintain the SWPPP documents, they are to be kept by or with the designated RLD at a location convenient to the activity site where they would be made available for review upon request during normal business hours.

2. The SWPPP and any subsequent amendments, modifications and updates shall be implemented from commencement of land disturbance until termination of VPDES Construction Permit coverage or completion of land disturbance (construction) activities where no VPDES Construction Permit coverage is required.

✱✱ 3. For all on-site support facilities that will be included in the VPDES Construction Permit coverage for this land disturbance (construction) activity, the contractor shall develop a SWPPP in accordance with, but not limited to, Section 106.08, 107.02 and 107.16 of the VDOT Road and Bridge Specifications. The SWPPP for the on-site support facilities shall be maintained with and become a component of the SWPPP for this land disturbance (construction) activity. Support facilities shall include, but not be limited to, borrow and disposal areas, construction and waste material storage areas, equipment and vehicle washing, maintenance, storage and fueling areas, storage areas for fertilizers, fuels or chemicals, concrete wash out areas, sanitary waste facilities and any other areas that may generate a stormwater or non-stormwater discharge directly related to the construction site.

4. For those land disturbing (construction) activities requiring coverage under the VPDES Construction Permit, the SWPPP shall be made available for review upon the request of the DEQ, the EPA, the VSMP Authority, the VESCP Authority, local government officials or the operator of a municipal separate storm sewer system (MS4) receiving discharge from the construction site.

✱ 5. For those land disturbing (construction) activities requiring coverage under the VPDES Construction Permit, the VDOT RLD shall post, or have posted, a copy of the General Permit coverage letter and a copy of a completed LD-445A form, noting the name and contact information for the VDOT person responsible for the land disturbing (construction) activity and its SWPPP, outside the project's construction office along with other Federal and State mandated information. Where there is no construction office (e.g., a maintenance activity), the permit coverage letter and the LD-445A form are to be maintained with the other SWPPP documents for the land disturbing (construction) activity.

6. The SWPPP shall be made available for review by the public upon request. Such reviews shall be at a time and publicly accessible location convenient to the VDOT and shall be scheduled during normal business hours and no less than once per month.

SECTION V - POLLUTION PREVENTION PLAN

1. The following non-stormwater discharges from this land disturbing (construction) activity and any on-site support facilities are prohibited:
   a. Wastewater from concrete washouts.
   b. Wastewater from the washout and cleanout of stucco, paint, from release oils, curing compounds and other construction materials.
   c. Fuels, oils or other pollutants used in vehicle and equipment operation and maintenance.
   d. Oils, toxic substances or hazardous substances from spills or other releases.
   e. Soaps, solvents or detergents used in equipment and vehicle washing.
   f. There shall be no discharge of floating solids or visible foam in other than trace amounts

2. The following non-stormwater discharges from this land disturbing (construction) activity and any on-site support facilities are allowed when discharged in compliance with the VPDES Construction Permit:
   a. Discharges from firefighting activities.
   b. Fire hydrant flushings.
   c. Waters used to wash vehicles or equipment where soaps, solvents or detergents have not been used and the wash water has been filtered, settled or similarly treated prior to discharge.
   d. Water used to control dust that has been filtered, settled or similarly treated prior to discharge.
   e. Potable water sources including uncontaminated waterline flushings managed in a manner to avoid stream impacts.
   f. Routine external building wash down where soaps, solvents or detergents have not been used and the wash water has been filtered, settled or similarly treated prior to discharge.
   g. Pavement wash waters where spills or leaks of toxic or hazardous materials have not occurred (or where all spilled or leaked material has been removed prior to washing), where soaps, solvents or detergents have not been used and where the wash water has been filtered, settled or similarly treated prior to discharge.
   h. Uncontaminated air conditioning or compressor condensate.
   i. Uncontaminated ground water or spring water.
   j. Foundation or footing drains where flows are not contaminated with process materials such as solvents.
   k. Uncontaminated excavation dewatering, including dewatering trenches and excavations that have been filtered, settled or similarly treated prior to discharge.
   l. Landscape irrigation.

✱✱ 3. The contractor shall develop a Pollution Prevention Plan to address any of his on-site operations that have a potential to generate a pollutant that may reasonably be expected to affect the quality of stormwater discharges from this land disturbance (construction) activity. The Pollution Prevention Plan shall be developed in accordance with, but not limited to, Sections 106.08, 107.02 and 107.16 of the VDOT Road and Bridge Specifications and shall include a narrative with appropriate plan detail and shall be provided on standard 8.5 x 11 inch paper or larger and shall:
   a. Identify the potential pollutant-generating activities and the pollutant that is expected to be exposed to stormwater.
   b. Describe the location where the potential pollutant-generating activities will occur, or if identified on the record set of plans, reference the record set of plans.
   c. Identify all non-stormwater discharges, as described in note two of this section, that are or will be commingled with stormwater discharges from the construction activity, including any on-site support activities.
   d. Identify the person(s) or contractor(s) responsible for implementing and maintaining the pollution prevention practice or practices for each pollutant-generating activity.
   e. Describe the pollution prevention practices and procedures that will be implemented to:
      1) Prevent and respond to leaks, spills, and other releases, including procedures for expeditiously stopping, containing, and cleaning up spills, leaks, and other releases, and procedures for reporting leaks, spills, and other releases in accordance with Section 107.16 of the VDOT Road and Bridge Specifications and the requirements within the VPDES Construction Permit.
      2) Prevent the discharge of spilled and leaked fuels and chemicals from vehicle fueling and maintenance activities.
      3) Prevent the discharge of soaps, solvents, detergents, and wash water from construction materials, including procedures for the clean-up of stucco, paint, form release oils, and curing compounds.
      4) Minimize the discharge of pollutants from vehicle and equipment washing, wheel wash water, and other types of washing.
      5) Direct concrete wash water into a leak-proof container or leak-proof settling basin. The container or basin shall be designed so that no overflows can occur due to inadequate sizing or precipitation. Hardened concrete wastes shall be removed and disposed of in a manner consistent with the handling of other construction wastes. Liquid concrete wastes shall be removed and disposed of in a manner consistent with the handling of other construction wash waters and shall not be discharged to surface waters.
      6) Minimize the discharge of pollutants from storage, handling, and disposal of construction products, materials, and wastes including building products (such as asphalt sealants, copper flashing, roofing materials, adhesives, and concrete admixtures), pesticides, herbicides, insecticides, fertilizers, landscape materials, construction and domestic wastes (such as packaging materials), scrap construction materials, masonry products, timber, pipe and electrical cuttings, plastics, styrofoam, concrete, and other trash or building materials.
      7) Prevent the discharge of fuels, oils, and other petroleum products, hazardous or toxic wastes, waste concrete and sanitary wastes.
      8) Address any other discharge from any potential pollutant-generating activity not listed herein.
      9) Minimize the exposure of waste materials to precipitation by closing or covering waste containers during precipitation events and at the end of the business day, or implementing other similarly effective practices. Minimization of exposure is not required in case where the exposure to precipitation will not result in a discharge of pollutants.
      10) Describe and implement procedures for providing pollution prevention awareness (including but not limited to prevention practices, disposal practices and appropriate disposal locations) for all applicable wastes (including any wash water), to appropriate personnel.

✱ Denotes information that is to be provided/completed by the RLD.

✱✱ Denotes information that is to be provided/completed by the contractor.

AFC PLANS

Revised 5/1/19

NOT TO SCALE	PROJECT 0095-076-299	SHEET NO. 2C(3)

LIMITED ACCESS HIGHWAY

By Resolution of the Highway Commission dated October 4, 1956.
By Resolution of the Highway Commission dated January 18, 1973.
By Resolution of the Commonwealth Transportation Board dated April 19, 2022

PROJECT MANAGER Rimpal Shah, P.E. (703) 259-2362 (NOVA District) _____
SURVEYED BY, DATE H&B Surveying and Mapping, LLC (804) 330-3781, 03/09/2021
DESIGN BY Whitman, Requardt & Associates, LLP (804) 272-8700 _____
SUBSURFACE UTILITY BY, DATE Accumark, Inc. (804) 550-7740, 07/07/2021

REVISED	STATE	STATE ROUTE	STATE PROJECT	SHEET NO.
	VA.	95	0095-076-299, C-501	2C(4)

STORMWATER POLLUTION PREVENTION PLAN (SWPPP) GENERAL INFORMATION SHEET

The information contained in the SWPPP General Information sheets is intended to comply with the requirements of the VPDES General Permit For Discharges Of Stormwater From Construction Activities (the VPDES Construction Permit) issued July 1, 2019 and VDOT's approved Annual ESC and SWM Standards and Specifications.

The SWPPP General Information sheets are to be completed and included in the construction plan set (or other such documents) for land disturbance (construction) activities that disturb an area equal to or greater than 10,000 square feet, or equal to or greater than 2,500 square feet in the area defined as Tidewater, Virginia in the Virginia Chesapeake Bay Preservation Act.

The VDOT RLD will ensure that the information shown on the SWPPP General Information sheets is updated/revised as necessary in order to reflect changes that may occur during the construction phase of the land disturbing (construction) activity. The updated/revised sheets shall be maintained with the designated record set of plans (or other such documents)for the land disturbance (construction) activity.

SECTION VI - PERMANENT BMP INFORMATION △

✳ Denotes information that is to be completed by the RLD.
( ) See note referenced by number in parentheses.

INSTALLED BMP INFORMATION
(VDOT Owned/Operated)

Plan Sheet(s)	Date BMP Made Functional	Type of BMP Installed (See Table A and C)	Geographic Location (County or City)	Latitude/Longitude (1) LAT	LONG	VA 6th Order HUC (7)	Receiving Water (2)	Name of Impaired Water (9)	Acres Treated Per BMP (3) Impervious	Pervious	TOTAL	✳ BMP Maintenance ID Number (10)	BMP Maintenance Manual (11) SECTION	BMP Inspection Manual (11) SECTION
9		Extended Detention Basin (Retrofit)	Prince William	38.6368	-77.2890	PL49	Unnamed Tributary Neabsco Creek		6.15	3.68	9.83	761002	Section 7	Section 7

ALTERNATIVE BMP INFORMATION

Plan Sheet(s)	Date	Type of BMP Installed (See Table B)	Geographic Location (County or City) (5)	Latitude/Longitude (1) (5) LAT	LONG	VA 6th Order HUC (5) (7)	Receiving Water (2)	Name of Impaired Water (9)

Perpetual Nutrient Credits Acquired for Project

Name of Nutrient Credit Generating Entity (6)	Nutrient Credits (lbs./TP./year) Acquired (6) (12)
TBD	4.98

△ Any changes to the proposed SWM Plan or BMPs necessitated during the construction phase of the project that affects the proposed construction details or potentially affects the informationshown in the BMP Tables A and/or B shall be coordinated by the VDOT RLD with the appropriate VDOT District Hydraulics Engineer. The construction plans and the BMP Tables A and/or B are to be formally revised to reflect any authorized/ approved changes to the proposed SWM Plan and/or the proposed BMP construction details. All plan revisions shall be completed in accordance with the Road Design Manual and the Construction Division IIM-CD-2013-12.01, signed and sealed in accordance with Department's sealing and signing policy IIM-LD-243 and filed with the construction record drawings maintained in the VDOT Central Office Plan File Room (ProjectWise). Prior to submitting for termination of coverage under the VPDES General Permit For The Discharge Of Stormwater From Construction Activities, the RLD shall have the District Maintenance Division review the BMPs installed with the project (BMP Table A) for acceptance of maintenance responsibility and to obtain a Maintenance ID number for each BMP listed in BMP Table A. The RLD shall use the informationin BMP Tables A and B along with the assigned Maintenance ID number and the date that the BMP became functional as a permanent control measure (for BMPs in Table A only) to complete the LD-445D form when certifying the construction of the BMPs and submitting for termination of coverage under theVPDES General Permit For The Discharge Of Stormwater From Construction Activities.

Table A: Permanent BMP Types (1999 Va. SWM Handbook)
Bio-retention Basin
Bio-retention Filter
Constructed Stormwater Wetlands
Extended Detention Basin
Extended Detention Basin Enhanced
Grassed Swale
Infiltration Basin
Infiltration Trench
Manufactured Treatment Device (MTD) (8)
Retention Basin I
Retention Basin II
Retention Basin III
Sand Filter
Vegetated Filter Strip
Other Approved Types (List Type)
Detention Basin

Table B: Alternative BMP Types
Comprehensive SWM Plan (Regional) Facility
Pollutant Loading Pro Rata Share Program
Other Approved Options (List Type) (4)

Table C: Permanent BMP Types (BMP Clearing House)
Sheet Flow to Vegetated Filter Strip
Grass Channel
Soil Compost Amendment
Permeable Pavement (Level 1)
Permeable Pavement (Level 2)
Infiltration Practice (Level 1)
Infiltration Practice (Level 2)
Bioretention (Level 1)
Bioretention (Level 2)
Dry Swale (Level 1)
Dry Swale (Level 2)
Wet Swale (Level 1)
Wet Swale (Level 2)
Filtering Practice (Level 1)
Filtering Practice (Level 2)
Constructed Wetlands (Level 1)
Constructed Wetlands (Level 2)
Extended Detention Pond (Level 1)
Extended Detention Pond (Level 2)
Wet Pond (Level 1)
Wet Pond (Level 2)
Manufactured Treatment Device (MTD)(8)
Other Approved Types (List Type)

NOTES:
(1) In decimal degrees to the nearest one ten-thousandth of a degree.

(2) For streams with no names, list "(Unnamed Tributary to downstream name)".

(3) Show acres treated to the nearest one hundreths acre.

(4) Include agreements with off-site BMP owners.

(5) Information pertains to the alternative BMP option location, where applicable. Exception - Not required for nutrient credit purchase option.

(6) Applies to the purchase of nutrient credits only.

(7) Virginia 6th Order HUC (VAHU6) Example - YO30.

(8) Final approved shop drawings of Manufactured Treatment Devices (MTDs) are to be included with the BMP information submitted with the LD-445D form.

(9) List the name of any impaired water to which the BMP discharges. The determination of impaired water shall be based on those streams listed as impaired in the DEQ 2012 305(b)/303(d) Water Quality Assessment Integrated Report and shall be the first named waterbody to which the BMP discharges. The impaired waters are those impaired by sediment, total suspended solids, turbidity, nitrogen or phosphorus.

(10) BMP Maintenance ID Number is to be assigned by the District Maintenance Division at permit termination or project completion. This ID number shall be assigned prior to the permit close out process and entered by the area construction engineer under this column, per IIM-LD-95

(11) Provide the section of each Maintenance manual that pertains to the type of BMP. Both manuals can be found at www.vdot.virginia.gov/ business/manuals in the Maintenance selections. Example: Section 4 would be noted for both the maintenance and inspection manuals for a Bioretention I infiltration BMP.

(12) Nutrient credits purchased to the nearest one hundredth pound.

AFC PLANS

Revised 5/1/19

NOT TO SCALE	PROJECT 0095-076-299	SHEET NO. 2C(4)

LIMITED ACCESS HIGHWAY

By Resolution of the Highway Commission dated October 4, 1956.
By Resolution of the Highway Commission dated January 18, 1973.
By Resolution of the Commonwealth Transportation Board dated April 19, 2022

PROJECT MANAGER Rimpal Shah, P.E. (703) 259-2362 (NOVA District) _____
SURVEYED BY, DATE H&B Surveying and Mapping, LLC (804) 330-3781, 03/09/2021
DESIGN BY Whitman, Requardt, & Associates, LLP (804) 212-8700 _____.
SUBSURFACE UTILITY BY, DATE Accumark, Inc. (804) 550-7740, 07/07/2021

REVISED	STATE	STATE ROUTE	STATE PROJECT	SHEET NO.
	VA.	95	0095-076-299, C-501	2E

DESIGN FEATURES RELATING TO CONSTRUCTION OR TO REGULATION AND CONTROL OF TRAFFIC MAY BE SUBJECT TO CHANGE AS DEEMED NECESSARY BY THE DEPARTMENT

EXISTING DRAINAGE PIPE REHABILITATION SUMMARY

I-95 Express Lanes Opitz Boulevard Connector EXISTING DRAINAGE PIPE REHABILITATION RECOMMENDATIONS

Pipe Location					Existing Condition From Pipe Vision Inspection						Recommedations			
Plan Sheet	Upstream ID	Downstream ID	Station	Baseline	Pipe Dia	Pipe Material	Standing Water in Culvert	Inspection Rating (Worst)	Controlling Defect	Additional Flow	Repair Required (Y/N)	Recommended Solution	Length To Be Lined	Comments
					(inch)								(feet)	
5	**5-7**	**270**	672+50	95 XBL	30	RCP	Trickle	3	Pipe wall cracks	Yes	Yes	Patch cracks with grout or two-part epoxy		Pipe Crosses SB I-95 and CD Lanes
6	**6-4**	**327**	693+00	95 XBL	50	RCP	Flooded at outlet	3	Pipe wall cracks	Yes	Yes	Patch cracks with grout or two-part epoxy		Flooding Caused by standing water in SWM Basin; Pipe Crosses SB I-95 and CD Lanes
6	**6-3**	**311**	689+00	95 XBL	24	RCP	None	4	Pipe wall cracks	Yes	Yes	Patch cracks with grout or two-part epoxy		Pipe Crosses SB I-95 and CD Lanes
8	**EX8-2**	**EX8-4**	718+50 to 719+00	95 XBL	24	RCP	Trickle	5	Hole with soil visible	Yes	Yes	Patch cracks and hole with grout		Pipe Runs Adjacent to Existing Slip Ramp
9	**361**	**362**	733+00	95 XBL	60	RCP	3 in	4	Pipe wall cracks	Yes	Yes	Patch cracks with grout or two-part epoxy		Pipe Crosses HOV Lanes
9	**353**	**9-1a**	727+00	95 XBL	46	RCP	Trickle	3	Pipe wall cracks	Yes	Yes	Patch cracks with grout or two-part epoxy		Break-in pipe connection upstream of proposed inlet connection to pipe.
9	**355**	**356**	725+00	95 XBL	48	RCP	20 in. at downstream end	3	Pipe wall cracks	Yes	Yes	Flexible Liner Type A,B,C, or D	204	Will need to dewater pipe for liner installation; Pipe Crosses SB I-95 and CD Lanes
9/11	**9-10**	**EX11-1**	732+00	95 XBL	30	RCP	None	3	Pipe wall cracks	No	Yes	Flexible Liner Type A,B, or C	175	SWM Basin Outlet, Pipe Crosses NB I-95 Ramp
10/9	**10-1**	**7100**	61+75 to 65+50	Opitz	24	RCP	None	5	Concrete Debris blockage	Yes	Yes	Flexible Liner Type A,B, or C	345	Concrete debris will need to be removed prior to pipe repair.

NOTE: Recommendations provided herein are consistent with improving a pipe system to a level of service that is commensurate with an expected useful life for infrastructure. The pipe inspection reports provided by Pipe Vision are individual condition assessments for a pipe with comments about imperfections at specific locations. According to the reports no pipe, in total length is in poor condition, or in need of immediate attention (repair or replacement). All pipes in the inspection reports appear to be in repairable condition needing anywhere from minor two part epoxy repair and or patching to structural lining. Cleaning, which is required for all pipes, consists of pressure washing with enough pressure to remove grit, stains, moss and dirt. All debris needs to be removed. The proposed liner recommendations based on VDOT Drainage Manual Section 8.3.6.7. - Category A - Cured in Place Pipe (CIPP); Category B - Fold and Form Flexible Liner; Category C - HDPE, PVC, or Polypropylene (PP) slip liners; Category D – Spray-On Liner.

AFC PLANS

NOT TO SCALE	PROJECT 0095-076-299	SHEET NO. 2E

7/11/2022 4589300I003.DGN
9:18:51 AM Plotted By: Jlopez-ornelas

LIMITED ACCESS HIGHWAY

By Resolution of the Highway Commission dated October 4, 1956.
By Resolution of the Highway Commission dated January 18, 1973.
By Resolution of the Commonwealth Transportation Board dated April 19, 2022

PROJECT MANAGER Rimpal Shah, P.E. (703) 259-2362 (NOVA District) _____
SURVEYED BY, DATE H&B Surveying and Mapping, LLC (804) 330-3781, 03/09/2021
DESIGN BY Whitman, Requardt, & Associates, LLP (804) 212-8700 _____
SUBSURFACE UTILITY BY, DATE Accumark, Inc. (804) 550-2740, 07/07/2021

See Sheet 10 for Utility Owner's List

COMMONWEALTH OF VIRGINIA
KYLE E. KENNEDY
Lic. No. 45092
PROFESSIONAL ENGINEER

Kyle Kennedy
2022.07.15 12:03:43 -04'00'

Whitman, Requardt & Associates
Richmond, Virginia
HYDRAULICS ENGINEER

COMMONWEALTH OF VIRGINIA
MITCHELL F. JOHNSON
Lic. No. 023838
PROFESSIONAL ENGINEER

Mitchell F Johnson
2022.07.13 19:49:09 -04'00'

Whitman, Requardt & Associates
Richmond, Virginia
ROADWAY ENGINEER

REVISED	STATE	STATE ROUTE	STATE PROJECT	SHEET NO.
	VA.	95	0095-076-299,C-501	3

DESIGN FEATURES RELATING TO CONSTRUCTION OR TO REGULATION AND CONTROL OF TRAFFIC MAY BE SUBJECT TO CHANGE AS DEEMED NECESSARY BY THE DEPARTMENT

SBL-1
CURVE I-95 SBL-1
PI = 297+29.24
DELTA = 20°09'59.04" (LT)
D = 01°00'00"
T = 1,018.86'
L = 2,016.64'
R = 5,729.58'
PC = 287+10.38
PT = 307+27.02

NBL-1
CURVE I-95 NBL-1
PI = 295+08.94
DELTA = 20°09'59.01" (LT)
D = 01°00'00"
T = 1,018.86'
L = 2,016.64'
R = 5,729.58'
PC = 284+90.08
PT = 305+06.72

XBL-1
CURVE 95 XBL-1
PI = 648+20.79
DELTA = 18°00'43.49" (LT)
D = 01°00'00"
T = 908.10'
L = 1,801.21'
R = 5,729.58'
PC = 639+12.70
PT = 657+13.90

XBL-1
Ls = 220.00
Θs = 01°06'00"
P = 0.35
K = 110.00
Xs = 219.99
Ys = 1.41
LT = 146.67
ST = 73.34
LC = 220.00
V= 65 MPH

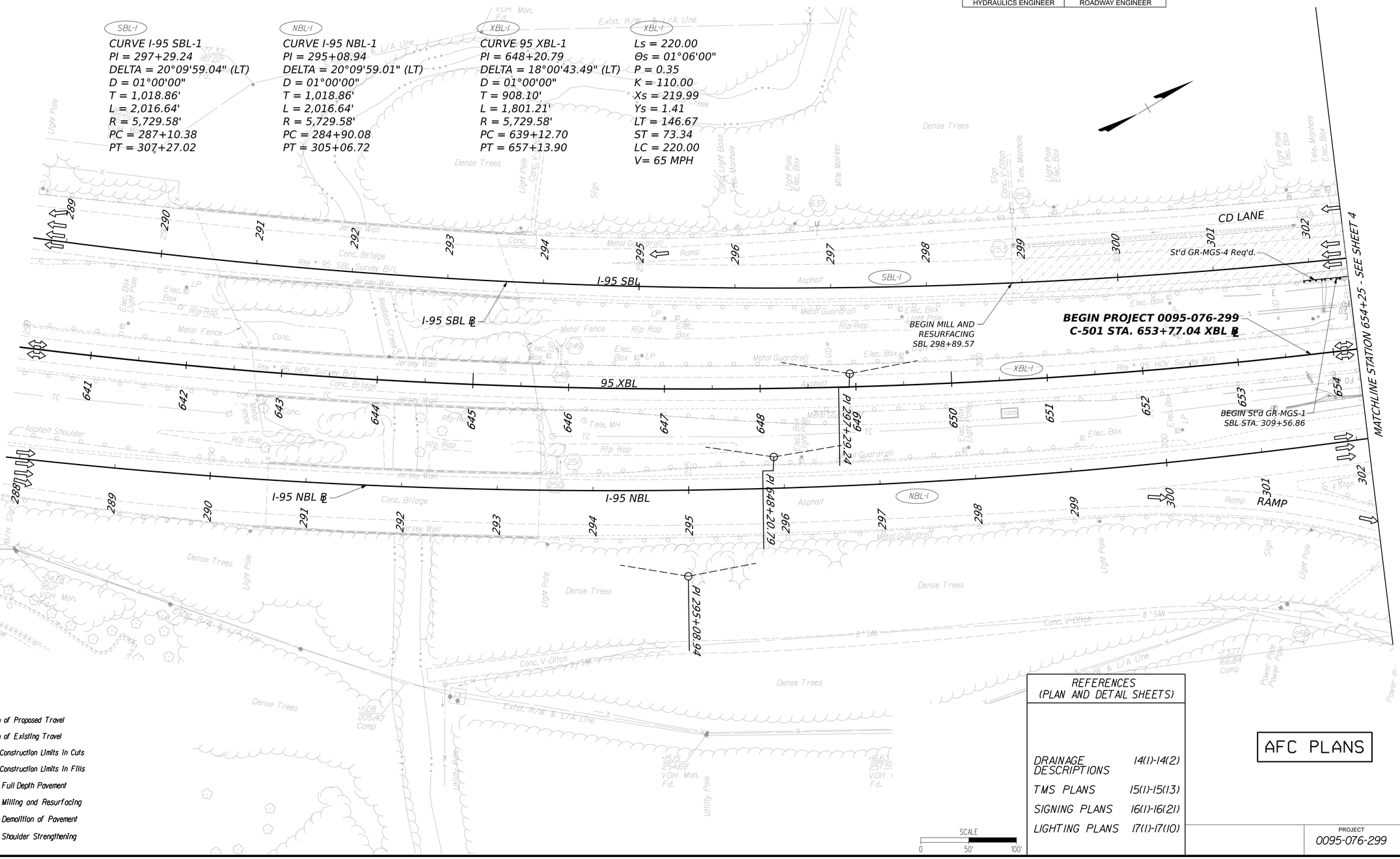

LEGEND
- Direction of Proposed Travel
- Direction of Existing Travel
- C ----- Denotes Construction Limits In Cuts
- F ----- Denotes Construction Limits In Fills
- Denotes Full Depth Pavement
- Denotes Milling and Resurfacing
- Denotes Demolition of Pavement
- Denotes Shoulder Strengthening

SCALE
0 50' 100'

REFERENCES (PLAN AND DETAIL SHEETS)

DRAINAGE DESCRIPTIONS	14(1)-14(2)
TMS PLANS	15(1)-15(13)
SIGNING PLANS	16(1)-16(21)
LIGHTING PLANS	17(1)-17(10)

AFC PLANS

PROJECT	SHEET NO.
0095-076-299	3

Cell Revised 12/1/12

7/11/2022 4589300I004.DGN
9:9:25 AM Plotted By: jlopez-ornelas

LIMITED ACCESS HIGHWAY

By Resolution of the Highway Commission dated October 4, 1956
By Resolution of the Highway Commission dated January 18, 1973
By Resolution of the Commonwealth Transportation Board dated April 19, 2022

PROJECT MANAGER Rimpal Shah, P.E. (703) 259-2362 (NOVA District)
SURVEYED BY, DATE H&B Surveying and Mapping, LLC (804) 330-3781, 03/09/2021
DESIGN BY Whitman, Requardt, & Associates, LLP (804) 212-8700
SUBSURFACE UTILITY BY, DATE Accumark, Inc. (804) 550-1740, 07/07/2021

See Sheet 10 for Utility Owner's List

KYLE E. KENNEDY
Lic. No. 45092
COMMONWEALTH OF VIRGINIA
PROFESSIONAL ENGINEER

Kyle Kennedy
2022.07.15 12:04:08 -04'00'
Whitman, Requardt & Associates
Richmond, Virginia
HYDRAULICS ENGINEER

MITCHELL F. JOHNSON
Lic. No. 023838
COMMONWEALTH OF VIRGINIA
PROFESSIONAL ENGINEER

Mitchell F Johnson
2022.07.13 19:49:25 -04'00'
Whitman, Requardt & Associates
Richmond, Virginia
ROADWAY ENGINEER

REVISED	STATE	STATE ROUTE	STATE PROJECT	SHEET NO.
	VA.	95	0095-076-299,C-501	4

DESIGN FEATURES RELATING TO CONSTRUCTION OR TO REGULATION AND CONTROL OF TRAFFIC MAY BE SUBJECT TO CHANGE AS DEEMED NECESSARY BY THE DEPARTMENT

SBL-1
CURVE I-95 SBL-1
PI = 297+29.24
DELTA = 20°09'59.04" (LT)
D = 01°00'00"
T = 1,018.86'
L = 2,016.64'
R = 5,729.58'
PC = 287+10.38
PT = 307+27.02

NBL-1
CURVE I-95 NBL-1
PI = 295+08.94
DELTA = 20°09'59.01" (LT)
D = 01°00'00"
T = 1,018.86'
L = 2,016.64'
R = 5,729.58'
PC = 284+90.08
PT = 305+06.72

XBL-1
CURVE 95 XBL-1
PI = 648+20.79
DELTA = 18°00'43.49" (LT)
D = 01°00'00"
T = 908.10'
L = 1,801.21'
R = 5,729.58'
PC = 639+12.70
PT = 657+13.90

XBL-1
Ls = 220.00
Θs = 01°06'00"
P = 0.35
K = 110.00
Xs = 219.99
Ys = 1.41
LT = 146.67
ST = 73.34
LC = 220.00
V= 65 MPH

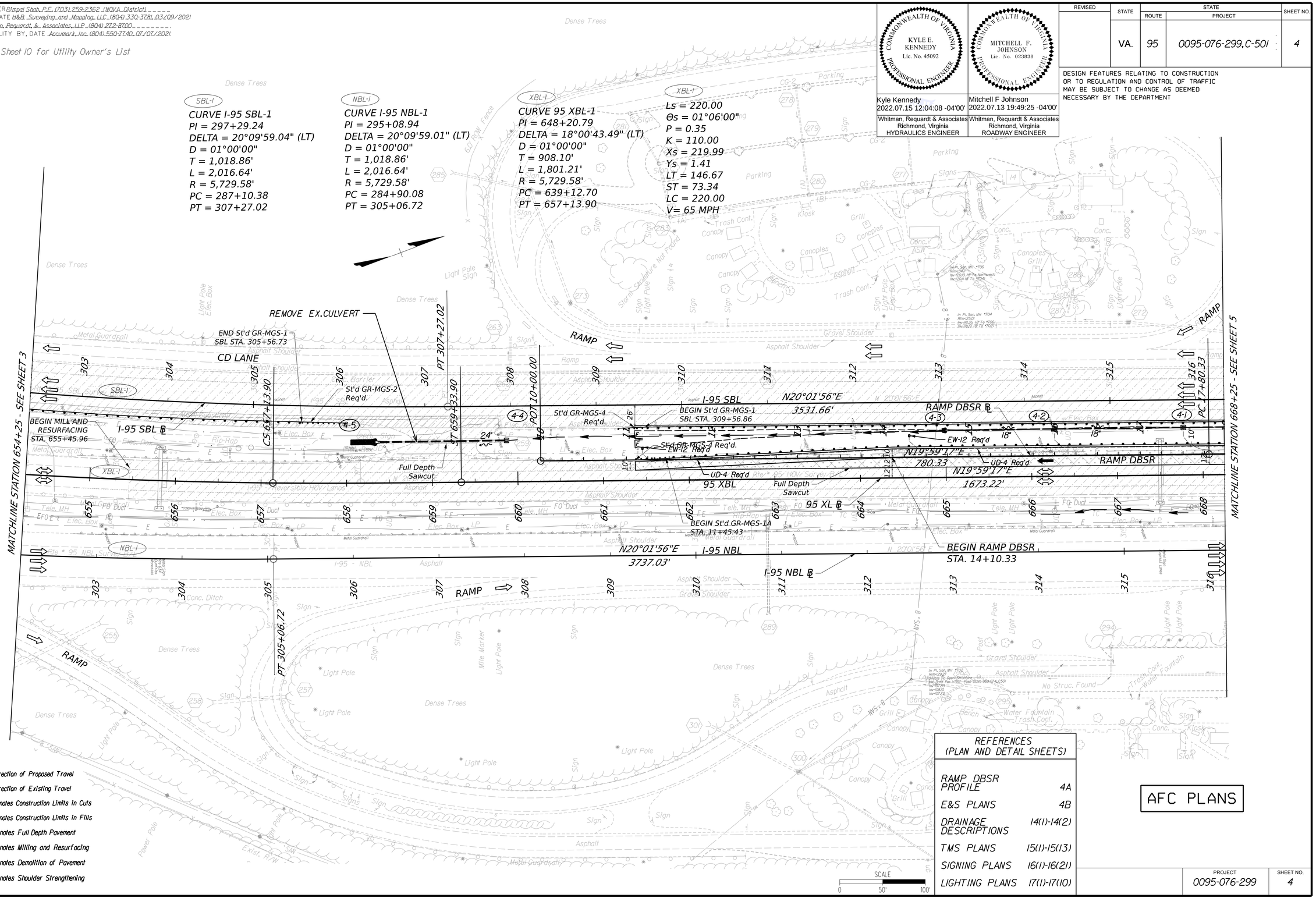

LEGEND

- Direction of Proposed Travel
- Direction of Existing Travel
- C ----- Denotes Construction Limits In Cuts
- F ----- Denotes Construction Limits In Fills
- Denotes Full Depth Pavement
- Denotes Milling and Resurfacing
- Denotes Demolition of Pavement
- Denotes Shoulder Strengthening

SCALE
0 50' 100'

REFERENCES (PLAN AND DETAIL SHEETS)

RAMP DBSR PROFILE	4A
E&S PLANS	4B
DRAINAGE DESCRIPTIONS	14(1)-14(2)
TMS PLANS	15(1)-15(13)
SIGNING PLANS	16(1)-16(21)
LIGHTING PLANS	17(1)-17(10)

AFC PLANS

PROJECT	SHEET NO.
0095-076-299	4

Roll Revised 12/1/12

7/11/2022 4589300l004a.DGN
9:19:58 AM Plotted By: jlopez-ornelas

LIMITED ACCESS HIGHWAY By Resolution of the Highway Commission dated October 4, 1956
By Resolution of the Highway Commission dated January 18, 1973
By Resolution of the Commonwealth Transportation Board dated April 19, 2022

PROJECT MANAGER Rimpal Shah, P.E. (703) 259-2362 (NOVA District)
SURVEYED BY, DATE H&B Surveying and Mapping, LLC (804) 330-3781, 03/09/2021
DESIGN BY Whitman, Requardt & Associates, LLP (804) 272-8700
SUBSURFACE UTILITY, DATE Accumark, Inc. (804) 550-7740, 07/07/2021

KYLE E. KENNEDY Lic. No. 45092 PROFESSIONAL ENGINEER COMMONWEALTH OF VIRGINIA
Kyle Kennedy 2022.07.15 12:04:34 -04'00'
Whitman, Requardt & Associates Richmond, Virginia HYDRAULICS ENGINEER

MITCHELL F. JOHNSON Lic. No. 023838 PROFESSIONAL ENGINEER COMMONWEALTH OF VIRGINIA
Mitchell F Johnson 2022.07.13 19:49:47 -04'00'
Whitman, Requardt & Associates Richmond, Virginia ROADWAY ENGINEER

REVISED	STATE	STATE ROUTE	STATE PROJECT	SHEET NO.
	VA.	95	0095-076-299, C-501	4A

DESIGN FEATURES RELATING TO CONSTRUCTION OR TO REGULATION AND CONTROL OF TRAFFIC MAY BE SUBJECT TO CHANGE AS DEEMED NECESSARY BY THE DEPARTMENT

RAMP DBSR PROFILE

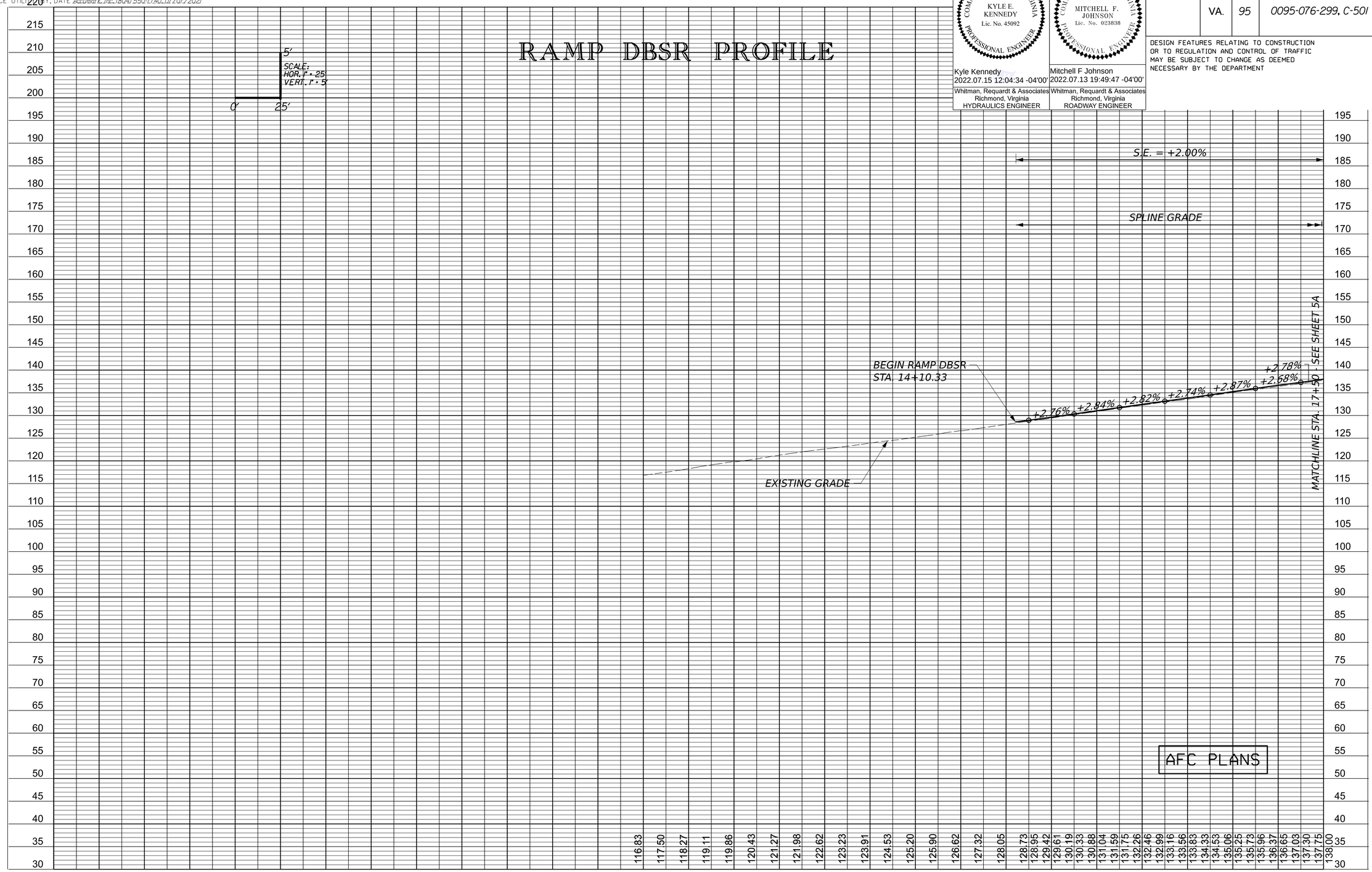

AFC PLANS

PROJECT	SHEET NO.
0095-076-299	4A

Cell Revised 12/1/12

7/11/2022 4589300I004b.DGN
9:20:43 AM Plotted By: Jlopez-ornelas

LIMITED ACCESS HIGHWAY

By Resolution of the Highway Commission dated October 4, 1956.
By Resolution of the Highway Commission dated January 18, 1973.
By Resolution of the Commonwealth Transportation Board dated April 19, 2022

PROJECT MANAGER Rimpal Shah, P.E. (703) 259-2362 (NOVA District)
SURVEYED BY, DATE B&B Surveying and Mapping, LLC (804) 330-3781, 03/09/2021
DESIGN BY Whitman, Requardt, & Associates, LLP (804) 212-8700
SUBSURFACE UTILITY BY, DATE Accumark, Inc. (804) 550-7740, 07/07/2021

EROSION AND SEDIMENT CONTROL PLAN
PHASE 1

COMMONWEALTH OF VIRGINIA
KYLE E. KENNEDY
Lic. No. 45092
PROFESSIONAL ENGINEER

Kyle Kennedy
2022.07.15 12:04:51 -04'00'

Whitman, Requardt & Associates
Richmond, Virginia
HYDRAULICS ENGINEER

COMMONWEALTH OF VIRGINIA
MITCHELL F. JOHNSON
Lic. No. 023838
PROFESSIONAL ENGINEER

Mitchell F Johnson
2022.07.13 19:50:24 -04'00'

Whitman, Requardt & Associates
Richmond, Virginia
ROADWAY ENGINEER

REVISED	STATE	STATE ROUTE	STATE PROJECT	SHEET NO.
	VA.	95	0095-076-299,C-501	4B

DESIGN FEATURES RELATING TO CONSTRUCTION OR TO REGULATION AND CONTROL OF TRAFFIC MAY BE SUBJECT TO CHANGE AS DEEMED NECESSARY BY THE DEPARTMENT

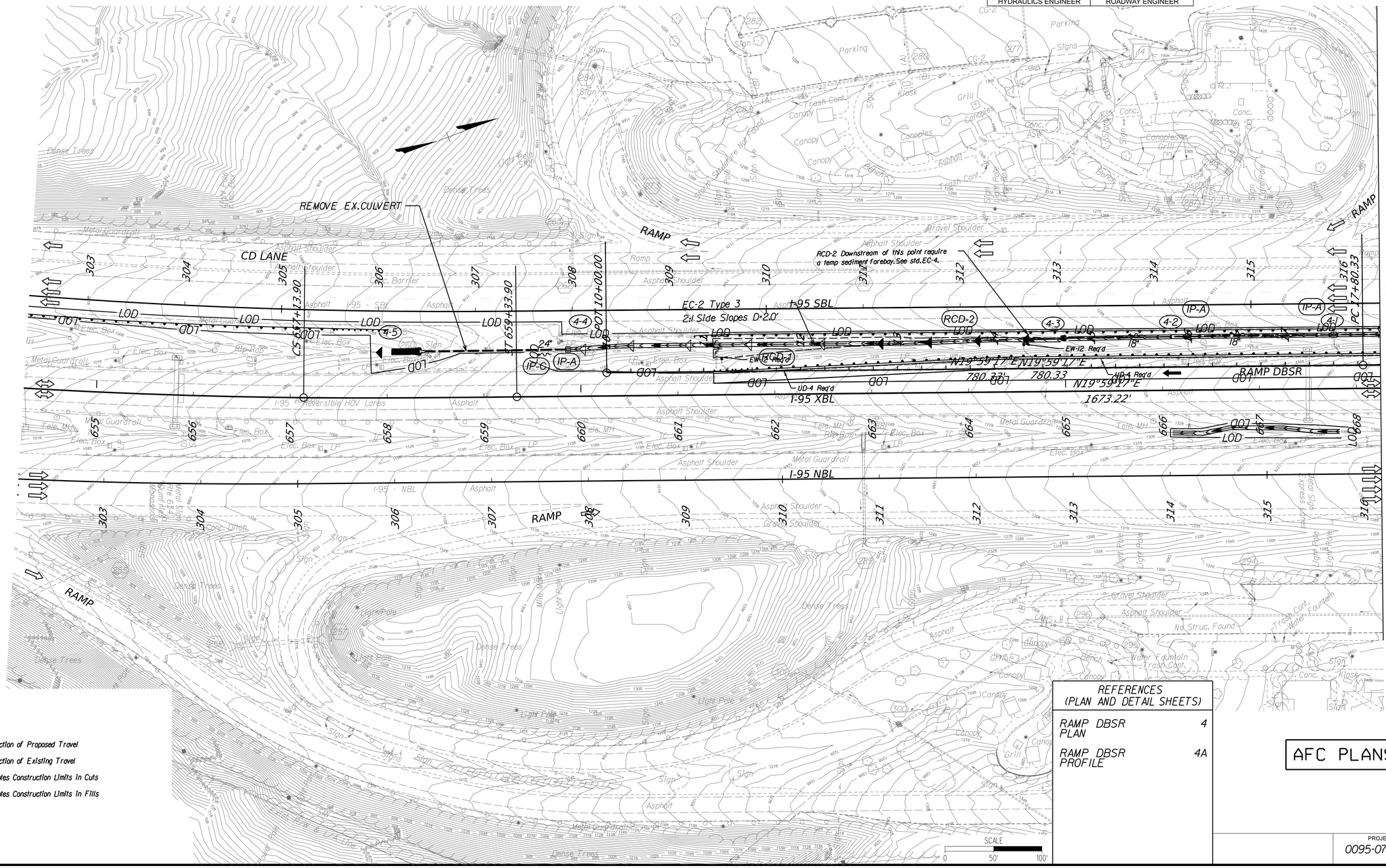

LEGEND

- Direction of Proposed Travel
- Direction of Existing Travel
- C _____ Denotes Construction Limits In Cuts
- F _ _ _ Denotes Construction Limits In Fills

SCALE
0 50' 100'

REFERENCES (PLAN AND DETAIL SHEETS)

RAMP DBSR PLAN	4
RAMP DBSR PROFILE	4A

AFC PLANS

PROJECT	SHEET NO.
0095-076-299	4B

Cell Revised 12/11/12

7/11/2022 4589300I005.DGN
9:2Ii9 AM Plotted By: Jlopez-ornelas

LIMITED ACCESS HIGHWAY

By Resolution of the Highway Commission dated October 4, 1956
By Resolution of the Highway Commission dated January 18, 1973
By Resolution of the Commonwealth Transportation Board dated April 19, 2022

PROJECT MANAGER Rimpal Shah, P.E. (703) 259-2362 (NOVA District) _____
SURVEYED BY, DATE B&B Surveying and Mapping, LLC (804) 330-3781, 03/09/2021
DESIGN BY Whitman, Requardt, & Associates, LLP (804) 212-8700 _____
SUBSURFACE UTILITY BY, DATE Accumark, Inc. (804) 550-7740, 07/07/2021

See Sheet 10 for Utility Owner's List

COMMONWEALTH OF VIRGINIA
KYLE E. KENNEDY
Lic. No. 45092
PROFESSIONAL ENGINEER

Kyle Kennedy
2022.07.15 12:05:11 -04'00'

Whitman, Requardt & Associates
Richmond, Virginia
HYDRAULICS ENGINEER

COMMONWEALTH OF VIRGINIA
MITCHELL F. JOHNSON
Lic. No. 023838
PROFESSIONAL ENGINEER

Mitchell F Johnson
2022.07.13 19:50:49 -04'00'

Whitman, Requardt & Associates
Richmond, Virginia
ROADWAY ENGINEER

REVISED	STATE	STATE ROUTE	STATE PROJECT	SHEET NO.
	VA.	95	0095-076-299,C-501	5

DESIGN FEATURES RELATING TO CONSTRUCTION OR TO REGULATION AND CONTROL OF TRAFFIC MAY BE SUBJECT TO CHANGE AS DEEMED NECESSARY BY THE DEPARTMENT

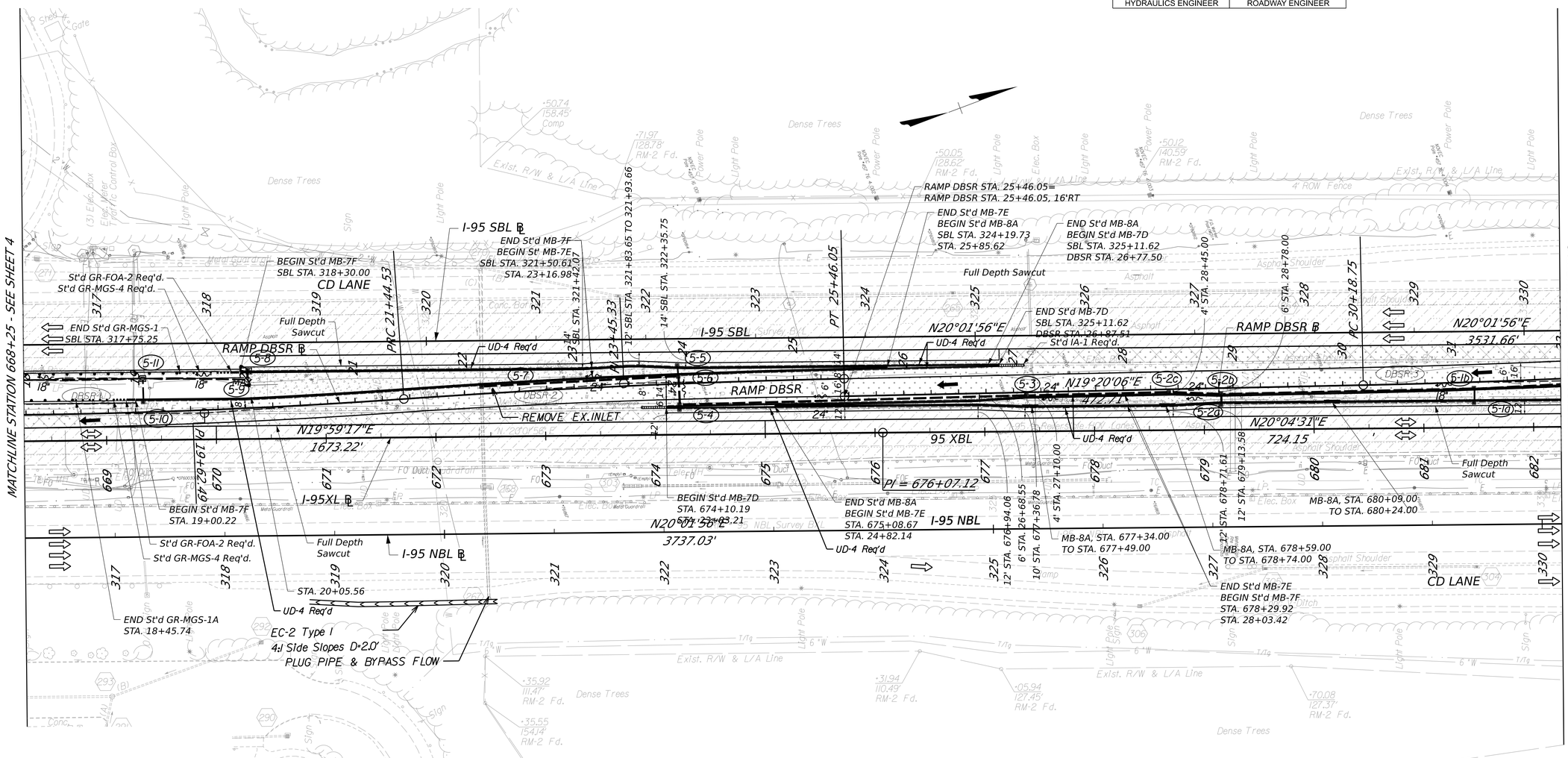

LEGEND

- Direction of Proposed Travel
- Direction of Existing Travel
- C. _____ Denotes Construction Limits In Cuts
- F. _ _ _ Denotes Construction Limits In Fills
- Denotes Full Depth Pavement
- Denotes Milling and Resurfacing
- Denotes Demolition of Pavement
- Denotes 4" Concrete Cap

DBSR-1
CURVE DBSR-1
PI = 19+62.49
DELTA = 03°28'13.10" (LT)
D = 00°57'10"
T = 182.15'
L = 364.20'
R = 6,013.00'
PC = 17+80.33
PT = 21+44.53
e = 2.0%
V = 50 MPH

DBSR-2
CURVE DBSR-2
PI = 23+45.33
DELTA = 02°49'01.91" (RT)
D = 00°42'06"
T = 200.80'
L = 401.52'
R = 8,166.00'
PC = 21+44.53
PT = 25+46.05
e = NC
V = 50 MPH

DBSR-3
CURVE DBSR-3
PI = 32+09.50
DELTA = 02°40'34.53" (LT)
D = 00°42'06"
T = 190.75'
L = 381.43'
R = 8,166.00'
PC = 30+18.75
PT = 34+00.18
e = NC
V = 50 MPH

SCALE 0 50' 100'

REFERENCES (PLAN AND DETAIL SHEETS)

RAMP DBSR PROFILE	5A
E&S PLAN	5B
DRAINAGE DESCRIPTIONS	14(1)-14(2)
TMS PLANS	15(1)-15(13)
SIGNING PLANS	16(1)-16(21)
LIGHTING PLANS	17(1)-17(10)

AFC PLANS

PROJECT	SHEET NO.
0095-076-299	5

Cell Revised 12/11/12

7/11/2022 9:21:37 AM

458930010O5a.DGN

Plotted By: Jlopez-ornelas

LIMITED ACCESS HIGHWAY

By Resolution of the Highway Commission dated October 4, 1956
By Resolution of the Highway Commission dated January 18, 1973
By Resolution of the Commonwealth Transportation Board dated April 19, 2022

PROJECT MANAGER Rimpal Shah, P.E. (703) 259-2362 (NOVA District)
SURVEYED BY, DATE H&B Surveying and Mapping, LLC (804) 330-3781, 03/09/2021
DESIGN BY Whitman, Requardt & Associates, LLP (804) 272-8700
SUBSURFACE UTILITIES BY, DATE Accumark, Inc. (804) 550-7740, 07/07/2021

KYLE E. KENNEDY
Lic. No. 45092
PROFESSIONAL ENGINEER
COMMONWEALTH OF VIRGINIA

Kyle Kennedy
2022.07.15 12:05:30 -04'00'

Whitman, Requardt & Associates
Richmond, Virginia
HYDRAULICS ENGINEER

MITCHELL F. JOHNSON
Lic. No. 023838
PROFESSIONAL ENGINEER
COMMONWEALTH OF VIRGINIA

Mitchell F Johnson
2022.07.13 19:51:08 -04'00'

Whitman, Requardt & Associates
Richmond, Virginia
ROADWAY ENGINEER

REVISED	STATE	STATE ROUTE	STATE PROJECT	SHEET NO.
	VA.	95	0095-076-299, C-501	5A

DESIGN FEATURES RELATING TO CONSTRUCTION OR TO REGULATION AND CONTROL OF TRAFFIC MAY BE SUBJECT TO CHANGE AS DEEMED NECESSARY BY THE DEPARTMENT

RAMP DBSR PROFILE

SCALE:
HOR. 1" = 25'
VERT. 1" = 5'

S.E. = +2.00%

S.E. TRANS.
-2.00% TO +2.00%

S.E. = -2.00%

+46.05
+50.00
+78.00

RAMP DBSR @ 16' SHIFT RT.
POT STA 25+46.05, EL. = 155.46 BK. =
POT STA 25+46.05, EL. = 155.78 AHD.

SPLINE GRADE

+75.00

RAMP DBSR PROFILE GRADE

EXISTING GRADE

STA = 20+60.00
EL = 146.40
K = 10.116
L = 150.00
SD = 40873.12 ft
V = 50 MPH

STA =23+10.00
EL =153.17
K =184
L =310.00
SD =794.20ft
V = 50 MPH

STA = 27+13.92
EL = 157.40
K = 161
L = 150.00
SD = INFft
V = 50 MPH

STA =29+81.49
EL = 162.50
K = 318
L = 150.00
SD = 2365.49ft
V = 50 MPH

+2.76%
+2.82%
+2.78%
+2.61%
+2.63%
+0.97%
+0.97%
+1.90%
+1.43%

MATCHLINE STA. 17+50 - SEE SHEET 4A

MATCHLINE STA. 32+00 - SEE SHEET 6A

18+00	19+00	20+00	21+00	22+00	23+00	24+00	25+00	26+00	27+00	28+00	29+00	30+00	31+00	32+00
137.75	139.45	140.81	141.77	142.87	144.15	145.49	146.94	148.47	150.02	151.61	153.27	154.97	156.79	158.73
138.00	139.96	141.05	141.21	143.10	144.18	145.16	147.05	148.76	150.42	151.10	153.40	154.74	156.30	157.06
138.51	140.13	141.51	142.40	143.53	143.60	146.14	147.27	146.11	150.78	146.80	154.13	151.17	157.66	159.03
138.72	140.48	141.77	142.87	145.49	144.15	145.59	152.10	149.39	154.45	151.61	155.81	155.01	156.54	157.37
139.19	140.81	141.21	143.10	143.53	144.83	145.80	152.56	146.41	150.78	146.94	156.94	151.99	158.22	159.20
		141.05	142.40	143.60	144.72	145.47	152.99	149.93	154.74	152.10	156.06	155.25	156.79	157.72
		141.51	142.87	144.18	145.49	147.45	147.76	146.22	151.17	152.56	157.17	156.47	158.73	160.02
		141.77	143.10	144.15	145.16	145.78	153.40	150.56	155.01	152.99	156.30	155.81	157.06	158.11
		141.21	143.53	144.83	146.14	148.11	148.47	146.55	151.99	147.76	157.66	156.94	159.03	160.09
		142.40	143.60	144.72	146.80	146.21	153.78	151.10	155.25	153.40	156.54	156.06	157.37	158.54
		142.87	145.49	145.49	151.61	148.76	149.67	146.80	156.47	148.47	158.22	157.17	159.20	160.20
		143.10	143.53	145.16	146.94	146.11	154.13	151.61	155.81	153.78	156.79	156.30	157.72	159.01
		143.53	143.60	146.14	152.10	149.39	150.42	146.94	156.94	149.67	158.73	157.66	160.02	160.64
		143.60	144.18	147.27	152.56	146.41	154.45	152.10	156.06	154.13	157.06	156.54	158.11	159.49
		144.18	144.15	147.45	152.99	149.93	150.78	152.56	157.17	150.42	159.03	158.22	160.09	161.17
		144.15	144.83	145.78	147.76	146.22	154.74	147.27	156.30	154.45	157.37	156.79	158.54	159.97
		144.83	144.72	148.11	153.40	150.56	151.17	147.45	157.66	150.78	159.20	158.73	160.20	161.25
		144.72	145.49	146.21	148.47	146.55	155.01	145.78	156.54	154.74	157.72	157.06	159.01	160.45
		145.49	145.16	148.76	153.78	151.10	151.99	148.11	158.22	151.17	160.02	159.03	160.64	161.55
		145.16	146.14	146.11	149.67	146.80	155.25	146.21	156.79	155.01	158.11	157.37	159.49	160.93
		146.14	146.80	149.39	154.13	151.61	156.47	148.76	158.73	151.99	160.09	159.20	161.17	161.82
		146.80	147.05	146.41	150.42	146.94	155.81	146.11	157.06	155.25	158.54	157.72	159.97	161.41
		147.05	147.27	149.93	154.45	152.10	156.94	149.67	159.03	156.47	160.20	160.02	161.25	162.13
		147.27	147.45	146.22	150.78	152.56	156.06	154.13	157.37	155.81	159.01	158.11	160.45	161.86
		147.45	147.76	150.56	154.74	147.27	157.17	150.42	159.20	156.94	160.64	160.09	161.55	162.41
		147.76	148.11	146.55	151.17	147.45	156.30	154.45	157.72	156.06	159.49	158.54	160.93	162.30
		148.11	148.47	151.10	155.01	145.78	157.66	150.78	160.02	157.17	161.17	160.20	161.82	162.91
		148.47	146.21	146.80	151.99	148.11	156.54	154.74	158.11	156.30	159.97	159.01	161.41	162.77
		146.21	148.76	151.61	155.25	146.21	158.22	151.17	160.09	157.66	161.25	160.64	162.13	163.21
		148.76	146.11	146.94	156.47	148.76	156.79	155.01	158.54	156.54	160.45	159.49	161.86	163.11
		146.11	149.39	152.10	155.81	146.11	158.73	151.99	160.20	158.22	161.55	161.17	162.41	163.41
		149.39	154.13	152.56	156.94	149.39	157.06	155.25	159.01	156.79	160.93	159.97	162.30	163.48
		154.13	150.42	147.27	156.06	154.13	159.03	156.47	160.64	158.73	161.82	161.25	162.91	163.97
		150.42	154.45	152.99	157.17	150.42	157.37	155.81	159.49	157.06	161.41	160.45	162.77	163.84
		154.45	150.78	147.76	156.30	154.45	159.20	156.94	161.17	159.03	162.13	161.55	163.21	164.32
		150.78	154.74	153.40	157.66	150.78	157.72	156.06	159.97	157.37	161.86	160.93	163.11	164.20
		154.74	151.17	148.47	156.54	154.74	160.02	157.17	161.25	159.20	162.41	161.82	163.41	164.45
		151.17	155.01	153.78	158.22	151.17	158.11	156.30	160.45	157.72	162.30	161.41	163.48	164.56
		155.01	151.99	149.67	156.79	155.01	160.09	157.66	161.55	160.02	162.91	162.13	163.97	164.71
		151.99	155.25	154.13	158.73	151.99	158.54	156.54	160.93	158.11	162.77	161.86	163.84	164.97
		155.25	156.47	150.42	157.06	155.25	160.20	158.22	161.82	160.09	163.21	162.41	164.32	164.60
		156.47	155.81	154.45	159.03	156.47	159.01	156.79	161.41	158.54	163.11	162.30	164.20	165.27
		155.81	156.94	150.78	157.37	155.81	160.64	158.73	162.13	160.20	163.41	162.91	164.45	164.58
		156.94	156.06	154.74	159.20	156.94	159.49	157.06	161.86	159.01	163.48	162.77	164.56	165.63
		156.06	157.17	151.17	157.72	156.06	161.17	159.03	162.41	160.64	163.97	163.21	164.71	
		157.17	156.30	155.01	160.02	157.17	159.97	159.20	162.30	159.49	163.84	163.11	164.97	
		156.30	157.66	151.99	158.11	156.30	161.25	157.72	162.91	161.17	164.32	163.41	164.60	
		157.66	156.54	155.25	160.09	157.66	160.45	160.02	162.77	159.97	164.20	163.48	165.27	
		156.54	158.22	156.47	158.54	156.54	161.55	158.11	163.21	161.25	164.45	163.97	164.58	
		158.22	156.79	155.81	160.20	158.22	160.93	160.09	163.11	160.45	164.56	163.84	165.63	
		156.79	158.73	156.94	159.01	156.79	161.82	158.54	163.41	161.55	164.71	164.32		
		158.73	157.06	156.06	160.64	158.73	161.41	160.20	163.48	160.93	164.97	164.20		
		157.06	159.03	157.17	159.49	157.06	162.13	159.01	163.97	161.82	164.60	164.45		
		159.03	157.37	156.30	161.17	159.03	161.86	160.64	163.84	161.41	165.27	164.56		
		157.37	159.20	157.66	159.97	157.37	162.41	159.49	164.32	162.13	164.58	164.71		
		159.20	157.72	156.54	161.25	159.20	162.30	161.17	164.20	161.86	165.63	164.97		
		157.72	160.02	158.22	160.45	157.72	162.91	159.97	164.45	162.41		164.60		
		160.02	158.11	156.79	161.55	160.02	162.77	161.25	164.56	162.30		165.27		
		158.11	160.09	158.73	160.93	158.11	163.21	160.45	164.71	162.91		164.58		
		160.09	158.54	157.06	161.82	160.09	163.11	161.55	164.97	162.77		165.63		
		158.54	160.20	159.03	161.41	158.54	163.41	160.93	164.60	163.21				
		160.20	159.01	157.37	162.13	160.20	163.48	161.82	165.27	163.11				
		159.01	160.64	159.20	161.86	159.01	163.97	161.41	165.63	163.41				
		160.64	159.49	157.72	162.41	160.64	163.84	162.13		163.48				
		159.49	161.17	160.02	162.30	159.49	164.32	161.86		163.97				
		161.17	159.97	158.11	162.91	161.17	164.20	162.41		163.84				
		159.97	161.25	160.09	162.77	159.97	164.45	162.30		164.32				
		161.25	160.45	158.54	163.21	161.25	164.56	162.91		164.20				
		160.45	161.55	160.20	163.11	160.45	164.71	162.77		164.45				
		161.55	160.93	159.01	163.41	161.55	164.97	163.21		164.56				
		160.93	161.82	160.64	163.48	160.93	164.60	163.11		164.71				
		161.82	161.41	159.49	163.97	161.82	165.27	163.41		164.97				
		161.41	162.13	161.17	163.84	161.41	164.58	163.48		164.60				
		162.13	161.86	159.97	164.32	162.13	165.63	163.97		165.27				
		161.86	162.41	161.25	164.20	161.86		163.84		164.58				
		162.41	162.30	160.45	164.45	162.41		164.32		165.63				
		162.30	162.91	161.55	164.56	162.30		164.20						
		162.91	162.77	160.93	164.71	162.91		164.45						
		162.77	163.21	161.82	164.97	162.77		164.56						
		163.21	163.11	161.41	164.60	163.21		164.71						
		163.11	163.41	162.13	165.27	163.11		164.97						
		163.41	163.48	161.86	164.58	163.41		164.60						
		163.48	163.97	162.41	165.63	163.48		165.27						
		163.97	163.84	162.30		163.97		164.58						
		163.84	164.32	162.91		163.84		165.63						
		164.32	164.20	162.77		164.32								
		164.20	164.45	163.21		164.20								
		164.45	164.56	163.11		164.45								
		164.56	164.71	163.41		164.56								
		164.71	164.97	163.48		164.71								
		164.97	164.60	163.97		164.97								
		164.60	165.27	163.84		164.60								
		165.27	164.58	164.32		165.27								
		164.58	165.63	164.20		164.58								
		165.63		164.45		165.63								
				164.56										
				164.71										
				164.97										
				164.60										
				165.27										
				164.58										
				165.63										

AFC PLANS

PROJECT	SHEET NO.
0095-076-299	5A

Cell Revised 12/1/12

7/11/2022 4589300I005b.DGN
9:22:21 AM Plotted By: Jlopez-ornelas

LIMITED ACCESS HIGHWAY

By Resolution of the Highway Commission dated October 4, 1956.
By Resolution of the Highway Commission dated January 18, 1973.
By Resolution of the Commonwealth Transportation Board dated April 19, 2022

PROJECT MANAGER Rimpal Shah, P.E. (703) 259-2362 (NOVA District)
SURVEYED BY, DATE H&B Surveying and Mapping, LLC (804) 330-3781, 03/09/2021
DESIGN BY Whitman, Requardt, & Associates, LLP (804) 212-8700
SUBSURFACE UTILITY BY, DATE Accumark, Inc. (804) 550-7740, 07/07/2021

EROSION AND SEDIMENT CONTROL PLAN
PHASE 1

COMMONWEALTH OF VIRGINIA
KYLE E. KENNEDY
Lic. No. 45092
PROFESSIONAL ENGINEER

Kyle Kennedy
2022.07.15 12:05:46 -04'00'

Whitman, Requardt & Associates
Richmond, Virginia
HYDRAULICS ENGINEER

COMMONWEALTH OF VIRGINIA
MITCHELL F. JOHNSON
Lic. No. 023838
PROFESSIONAL ENGINEER

Mitchell F Johnson
2022.07.13 19:51:23 -04'00'

Whitman, Requardt & Associates
Richmond, Virginia
ROADWAY ENGINEER

REVISED	STATE	STATE ROUTE	STATE PROJECT	SHEET NO.
	VA.	95	0095-076-299,C-501	5B

DESIGN FEATURES RELATING TO CONSTRUCTION OR TO REGULATION AND CONTROL OF TRAFFIC MAY BE SUBJECT TO CHANGE AS DEEMED NECESSARY BY THE DEPARTMENT

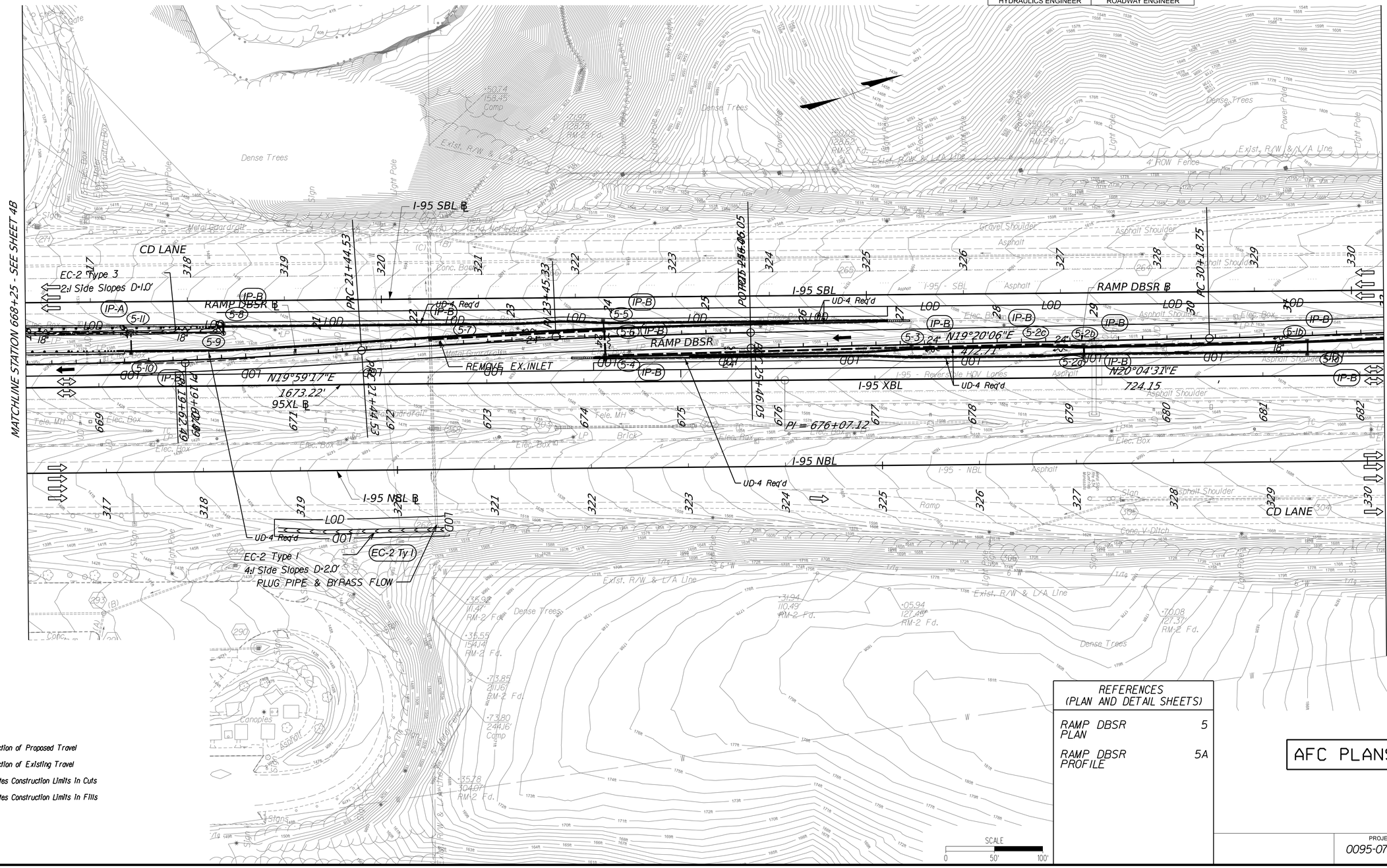

LEGEND

- Direction of Proposed Travel
- Direction of Existing Travel
- C. _____ Denotes Construction Limits In Cuts
- F. _ _ _ Denotes Construction Limits In Fills

REFERENCES (PLAN AND DETAIL SHEETS)

RAMP DBSR PLAN	5
RAMP DBSR PROFILE	5A

AFC PLANS

PROJECT	SHEET NO.
0095-076-299	5B

Cell Revised 12/11/12

7/11/2022 4589300I006.DGN
9:23:31 AM Plotted By: jlopez-ornelas

LIMITED ACCESS HIGHWAY By Resolution of the Highway Commission dated October 4, 1956.
By Resolution of the Highway Commission dated January 18, 1973
By Resolution of the Commonwealth Transportation Board dated April 19, 2022

PROJECT MANAGER _____
SURVEYED BY, DATE _____
DESIGN BY _____
SUBSURFACE UTILITY BY, DATE _____

See Sheet 10 for Utility Owner's List

COMMONWEALTH OF VIRGINIA — KYLE E. KENNEDY — Lic. No. 45092 — PROFESSIONAL ENGINEER

Kyle Kennedy
2022.07.15 12:06:01 -04'00'
Whitman, Requardt & Associates
Richmond, Virginia
HYDRAULICS ENGINEER

COMMONWEALTH OF VIRGINIA — MITCHELL F. JOHNSON — Lic. No. 023838 — PROFESSIONAL ENGINEER

Mitchell F Johnson
2022.07.13 19:51:45 -04'00'
Whitman, Requardt & Associates
Richmond, Virginia
ROADWAY ENGINEER

REVISED	STATE	STATE ROUTE	STATE PROJECT	SHEET NO.
	VA.	95	0095-076-299,C-501	6

DESIGN FEATURES RELATING TO CONSTRUCTION OR TO REGULATION AND CONTROL OF TRAFFIC MAY BE SUBJECT TO CHANGE AS DEEMED NECESSARY BY THE DEPARTMENT

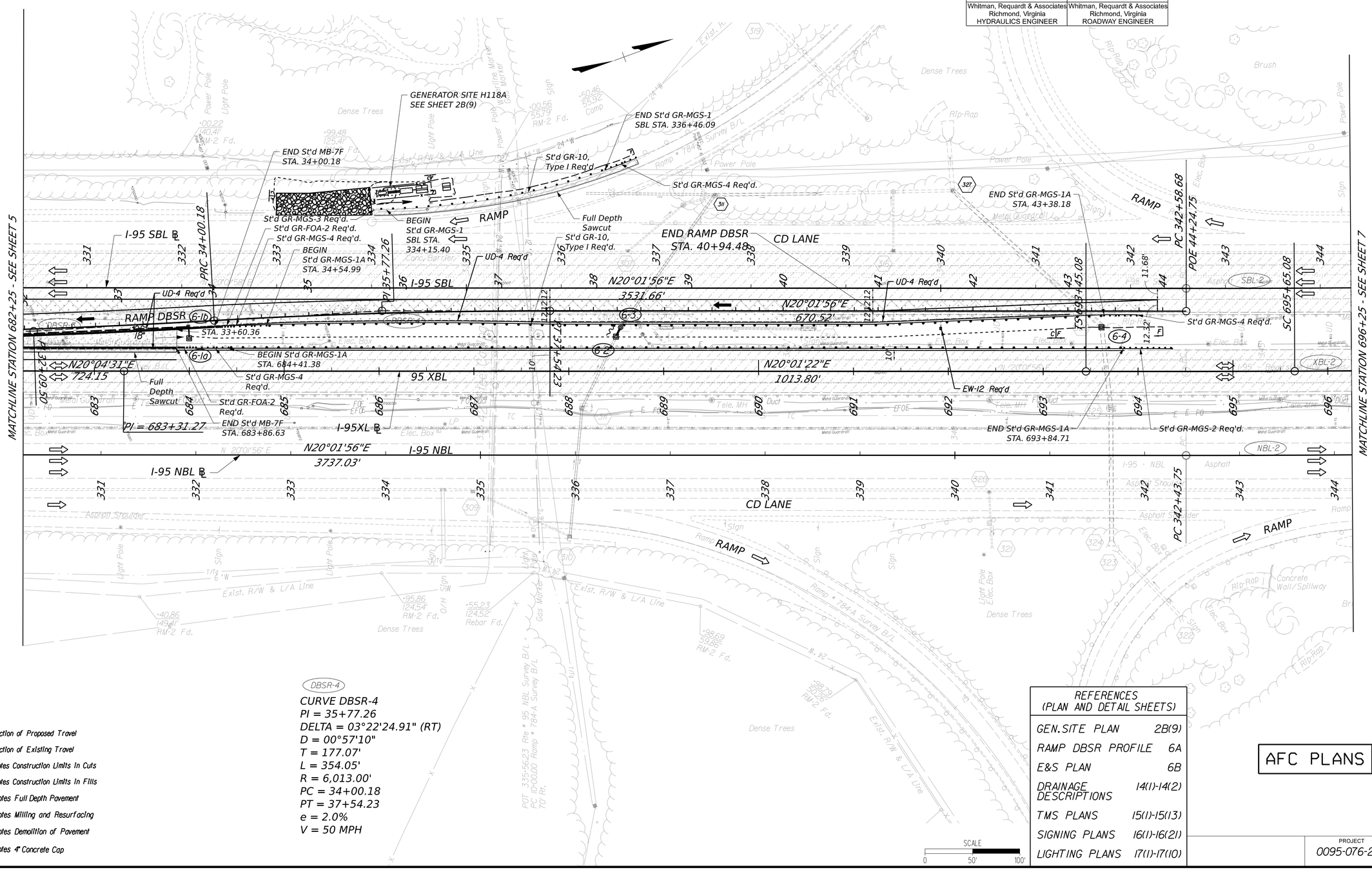

LEGEND
- Direction of Proposed Travel
- Direction of Existing Travel
- C ----- Denotes Construction Limits in Cuts
- F — — — Denotes Construction Limits in Fills
- Denotes Full Depth Pavement
- Denotes Milling and Resurfacing
- Denotes Demolition of Pavement
- Denotes 4" Concrete Cap

DBSR-4
CURVE DBSR-4
PI = 35+77.26
DELTA = 03°22'24.91" (RT)
D = 00°57'10"
T = 177.07'
L = 354.05'
R = 6,013.00'
PC = 34+00.18
PT = 37+54.23
e = 2.0%
V = 50 MPH

SCALE 0 50' 100'

REFERENCES (PLAN AND DETAIL SHEETS)	
GEN. SITE PLAN	2B(9)
RAMP DBSR PROFILE	6A
E&S PLAN	6B
DRAINAGE DESCRIPTIONS	14(1)-14(2)
TMS PLANS	15(1)-15(13)
SIGNING PLANS	16(1)-16(21)
LIGHTING PLANS	17(1)-17(10)

AFC PLANS

PROJECT	SHEET NO.
0095-076-299	6

Cell Revised 12/11/12

7/11/2022 9:23:56 AM

458930010O6a.DGN

Plotted By: jlopez-ornelas

LIMITED ACCESS HIGHWAY

By Resolution of the Highway Commission dated October 4, 1956
By Resolution of the Highway Commission dated January 18, 1973
By Resolution of the Commonwealth Transportation Board dated April 19, 2022

PROJECT MANAGER Rimpal Shah, P.E. (703) 259-2362 (NOVA District)
SURVEYED BY, DATE H&B Surveying and Mapping, LLC (804) 330-3781 03/09/2021
DESIGN BY Whitman, Requardt & Associates, LLP (804) 272-8700
SUBSURFACE UTILITIES BY, DATE Accumark, Inc. (804) 550-7740 07/07/2021

KYLE E. KENNEDY
Lic. No. 45092
COMMONWEALTH OF VIRGINIA
PROFESSIONAL ENGINEER

Kyle Kennedy
2022.07.15 12:06:15 -04'00'
Whitman, Requardt & Associates
Richmond, Virginia
HYDRAULICS ENGINEER

MITCHELL F. JOHNSON
Lic. No. 023838
COMMONWEALTH OF VIRGINIA
PROFESSIONAL ENGINEER

Mitchell F Johnson
2022.07.13 19:52:02 -04'00'
Whitman, Requardt & Associates
Richmond, Virginia
ROADWAY ENGINEER

REVISED	STATE	STATE ROUTE	STATE PROJECT	SHEET NO.
	VA.	95	0095-076-299, C-501	6A

DESIGN FEATURES RELATING TO CONSTRUCTION OR TO REGULATION AND CONTROL OF TRAFFIC MAY BE SUBJECT TO CHANGE AS DEEMED NECESSARY BY THE DEPARTMENT

RAMP DBSR PROFILE

5'
SCALE:
HOR. 1" = 25'
VERT. 1" = 5'
0' 25'

S.E. = +2.00%

RAMP DBSR PROFILE GRADE

STA = 32+67.63
EL = 166.60
K = 449
L = 150.00
SD = 3306.18ft
V = 50 MPH

150.00

SPLINE GRADE

END RAMP DBSR
STA. 40+94.48

+1.10% +1.12% +1.00% +1.10% +1.00% +0.09% +0.09% +1.04% +1.04% +1.02% +1.06%

MATCHLINE STA. 32+00 - SEE SHEET 5A

EXISTING GRADE

32+00	33+00	34+00	35+00	36+00	37+00	38+00	39+00	40+00	41+00	42+00	43+00	44+00
164.58	165.63	164.77	165.98	165.15	166.31	165.29	166.63	165.03	166.94	165.14	167.23	165.13
167.50	165.88	167.78	166.38	168.05	166.92	168.33	167.63	168.60	168.17	168.88	168.69	169.15
168.89	169.43	169.21	169.70	169.49	169.98	169.79	170.25	170.09	170.51	170.40	170.76	170.67
171.03	170.97	171.31	171.20	171.58	171.40	171.81	171.61	172.03	171.86	172.24	172.10	172.45
172.29	172.69	172.54	172.96	172.78	173.21	173.04	173.47	173.27	173.73	173.55	173.99	173.84
174.24	174.10	174.49	174.44	174.77	174.74	175.04	174.92	175.10	175.34	175.60	175.83	176.04
176.32	176.60	176.91	177.21	177.45	177.65	177.95						

AFC PLANS

PROJECT	SHEET NO.
0095-076-299	6A

Cell Revised 12/11/12

7/11/2022 4589300I006b.DGN
9:25:31 AM Plotted By: jlopez-ornelas

LIMITED ACCESS HIGHWAY

By Resolution of the Highway Commission dated October 4, 1956.
By Resolution of the Highway Commission dated January 18, 1973.
By Resolution of the Commonwealth Transportation Board dated April 19, 2022

PROJECT MANAGER Rimpal Shah, P.E. (703) 259-2362 (NOVA District) _____
SURVEYED BY, DATE H&B Surveying and Mapping, LLC (804) 330-3781, 03/09/2021
DESIGN BY Whitman, Requardt, & Associates, LLP (804) 212-8700 _____
SUBSURFACE UTILITY BY, DATE Accumark, Inc. (804) 550-1740, 07/07/2021

EROSION AND SEDIMENT CONTROL PLAN
PHASE 1

COMMONWEALTH OF VIRGINIA
KYLE E. KENNEDY
Lic. No. 45092
PROFESSIONAL ENGINEER

Kyle Kennedy
2022.07.15 12:06:33 -04'00'

Whitman, Requardt & Associates
Richmond, Virginia
HYDRAULICS ENGINEER

COMMONWEALTH OF VIRGINIA
MITCHELL F. JOHNSON
Lic. No. 023838
PROFESSIONAL ENGINEER

Mitchell F Johnson
2022.07.13 19:52:24 -04'00'

Whitman, Requardt & Associates
Richmond, Virginia
ROADWAY ENGINEER

REVISED	STATE	STATE ROUTE	STATE PROJECT	SHEET NO.
	VA.	95	0095-076-299,C-501	6B

DESIGN FEATURES RELATING TO CONSTRUCTION OR TO REGULATION AND CONTROL OF TRAFFIC MAY BE SUBJECT TO CHANGE AS DEEMED NECESSARY BY THE DEPARTMENT

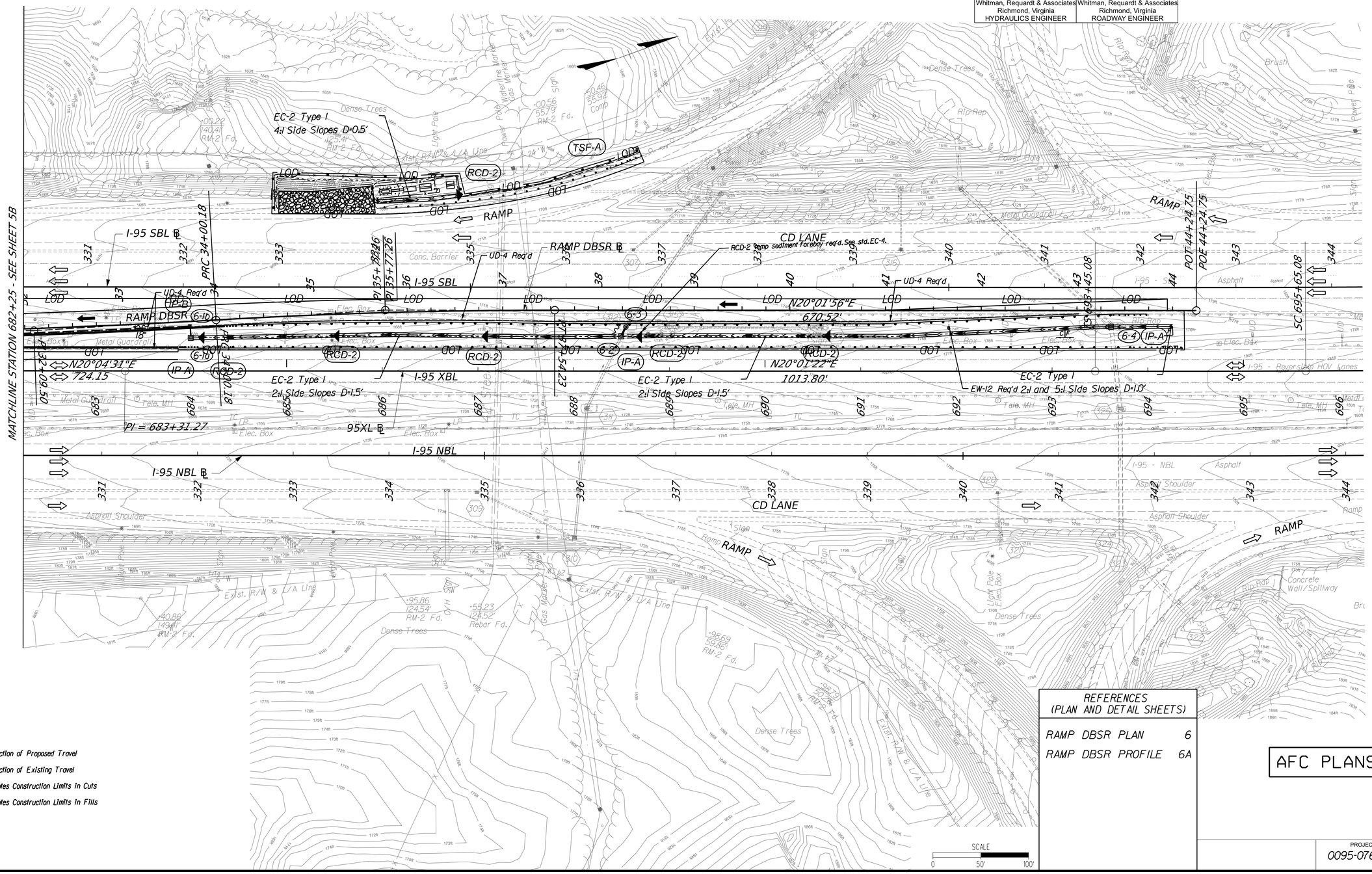

LEGEND

- Direction of Proposed Travel
- Direction of Existing Travel
- C. _____ Denotes Construction Limits In Cuts
- F. _ _ _ Denotes Construction Limits In Fills

REFERENCES (PLAN AND DETAIL SHEETS)	
RAMP DBSR PLAN	6
RAMP DBSR PROFILE	6A

AFC PLANS

PROJECT	SHEET NO.
0095-076-299	6B

Cell Revised 12/11/12

7/11/2022 4589300I007.DGN
9:26:06 AM Plotted By: jlopez-ornelas

LIMITED ACCESS HIGHWAY By Resolution of the Highway Commission dated October 4, 1956.
By Resolution of the Highway Commission dated January 18, 1973
By Resolution of the Commonwealth Transportation Board dated April 19, 2022

PROJECT MANAGER Rimpal Shah, P.E. (703) 259-2362 (NOVA District)
SURVEYED BY, DATE H&B Surveying and Mapping, LLC (804) 330-3781, 03/09/2021
DESIGN BY Whitman, Requardt, & Associates, LLP (804) 212-8700
SUBSURFACE UTILITY BY, DATE Accumark, Inc. (804) 550-7740, 07/07/2021

See Sheet 10 for Utility Owner's List

COMMONWEALTH OF VIRGINIA — KYLE E. KENNEDY — Lic. No. 45092 — PROFESSIONAL ENGINEER

Kyle Kennedy
2022.07.15 12:06:58 -04'00'
Whitman, Requardt & Associates
Richmond, Virginia
HYDRAULICS ENGINEER

COMMONWEALTH OF VIRGINIA — MITCHELL F. JOHNSON — Lic. No. 023838 — PROFESSIONAL ENGINEER

Mitchell F Johnson
2022.07.13 19:52:51 -04'00'
Whitman, Requardt & Associates
Richmond, Virginia
ROADWAY ENGINEER

REVISED	STATE	STATE ROUTE	STATE PROJECT	SHEET NO.
	VA.	95	0095-076-299,C-501	7

DESIGN FEATURES RELATING TO CONSTRUCTION OR TO REGULATION AND CONTROL OF TRAFFIC MAY BE SUBJECT TO CHANGE AS DEEMED NECESSARY BY THE DEPARTMENT

LEGEND
- Direction of Proposed Travel
- Direction of Existing Travel
- C ----- Denotes Construction Limits In Cuts
- F ____ Denotes Construction Limits In Fills
- Denotes Full Depth Pavement
- Denotes Milling and Resurfacing
- Denotes Demolition of Pavement

NBL-2
CURVE I-95 NBL-2
PI = 352+81.87
DELTA = 05°09'36.94" (LT)
D = 00°14'56"
T = 1,038.12'
L = 2,074.84'
R = 23,037.51'
PC = 342+43.75
PT = 363+18.59

SBL-2
CURVE I-95 SBL-2
PI = 352+88.88
DELTA = 05°09'37.02" (LT)
D = 00°15'02"
T = 1,030.20'
L = 2,059.00'
R = 22,861.51'
PC = 342+58.68
PT = 363+17.68

XBL-2
CURVE 95 XBL-2
PI = 704+90.62
DELTA = 04°37'08.11" (LT)
D = 00°14'59"
T = 925.54'
L = 1,850.08'
R = 22,949.51'
PC = 695+65.08
PT = 714+15.16

XBL-2
Ls = 220.00
Θs = 00°16'29"
P = 0.88
K = 110.00
Xs = 220.00
Ys = 0.35
LT = 146.67
ST = 73.33
LC = 220.00
V= 65 mph

SCALE 0 50' 100'

REFERENCES (PLAN AND DETAIL SHEETS)	
TMS PLANS	I5(I)-I5(I3)
SIGNING PLANS	I6(I)-I6(2I)
LIGHTING PLANS	I7(I)-I7(I0)

AFC PLANS

PROJECT	SHEET NO.
0095-076-299	7

Cell Revised 12/11/12

7/11/2022 4589300I008.DGN
9:26:52 AM Plotted By: Jlopez-ornelas

LIMITED ACCESS HIGHWAY

By Resolution of the Highway Commission dated October 4, 1956
By Resolution of the Highway Commission dated January 18, 1973
By Resolution of the Commonwealth Transportation Board dated April 19, 2022

PROJECT MANAGER Rimpal Shah, P.E. (703) 259-2362 (NOVA District)
SURVEYED BY, DATE H&B Surveying and Mapping, LLC (804) 330-3781, 03/09/2021
DESIGN BY Whitman, Requardt, & Associates, LLP (804) 212-8700
SUBSURFACE UTILITY BY, DATE Accumark, Inc. (804) 550-2740, 07/07/2021

See Sheet 10 for Utility Owner's List

REVISED	STATE	STATE ROUTE	STATE PROJECT	SHEET NO.
	VA.	95	0095-076-299,C-501	8

DESIGN FEATURES RELATING TO CONSTRUCTION OR TO REGULATION AND CONTROL OF TRAFFIC MAY BE SUBJECT TO CHANGE AS DEEMED NECESSARY BY THE DEPARTMENT

COMMONWEALTH OF VIRGINIA
KYLE E. KENNEDY
Lic. No. 45092
PROFESSIONAL ENGINEER

Kyle Kennedy
2022.07.15 12:07:19 -04'00'
Whitman, Requardt & Associates
Richmond, Virginia
HYDRAULICS ENGINEER

COMMONWEALTH OF VIRGINIA
MITCHELL F. JOHNSON
Lic. No. 023838
PROFESSIONAL ENGINEER

Mitchell F Johnson
2022.07.13 19:53:07 -04'00'
Whitman, Requardt & Associates
Richmond, Virginia
ROADWAY ENGINEER

NBL-2
CURVE I-95 NBL-2
PI = 352+81.87
DELTA = 05°09'36.94" (LT)
D = 00°14'56"
T = 1,038.12'
L = 2,074.84'
R = 23,037.51'
PC = 342+43.75
PT = 363+18.59

SBL-2
CURVE I-95 SBL-2
PI = 352+88.88
DELTA = 05°09'37.02" (LT)
D = 00°15'02"
T = 1,030.20'
L = 2,059.00'
R = 22,861.51'
PC = 342+58.68
PT = 363+17.68

XBL-2
CURVE 95 XBL-2
PI = 704+90.62
DELTA = 04°37'08.11" (LT)
D = 00°14'59"
T = 925.54'
L = 1,850.08'
R = 22,949.51'
PC = 695+65.08
PT = 714+15.16

XBL-2
Ls = 220.00
Θs = 00°16'29"
P = 0.88
K = 110.00
Xs = 220.00
Ys = 0.35
LT = 146.67
ST = 73.33
LC = 220.00
V= 65 mph

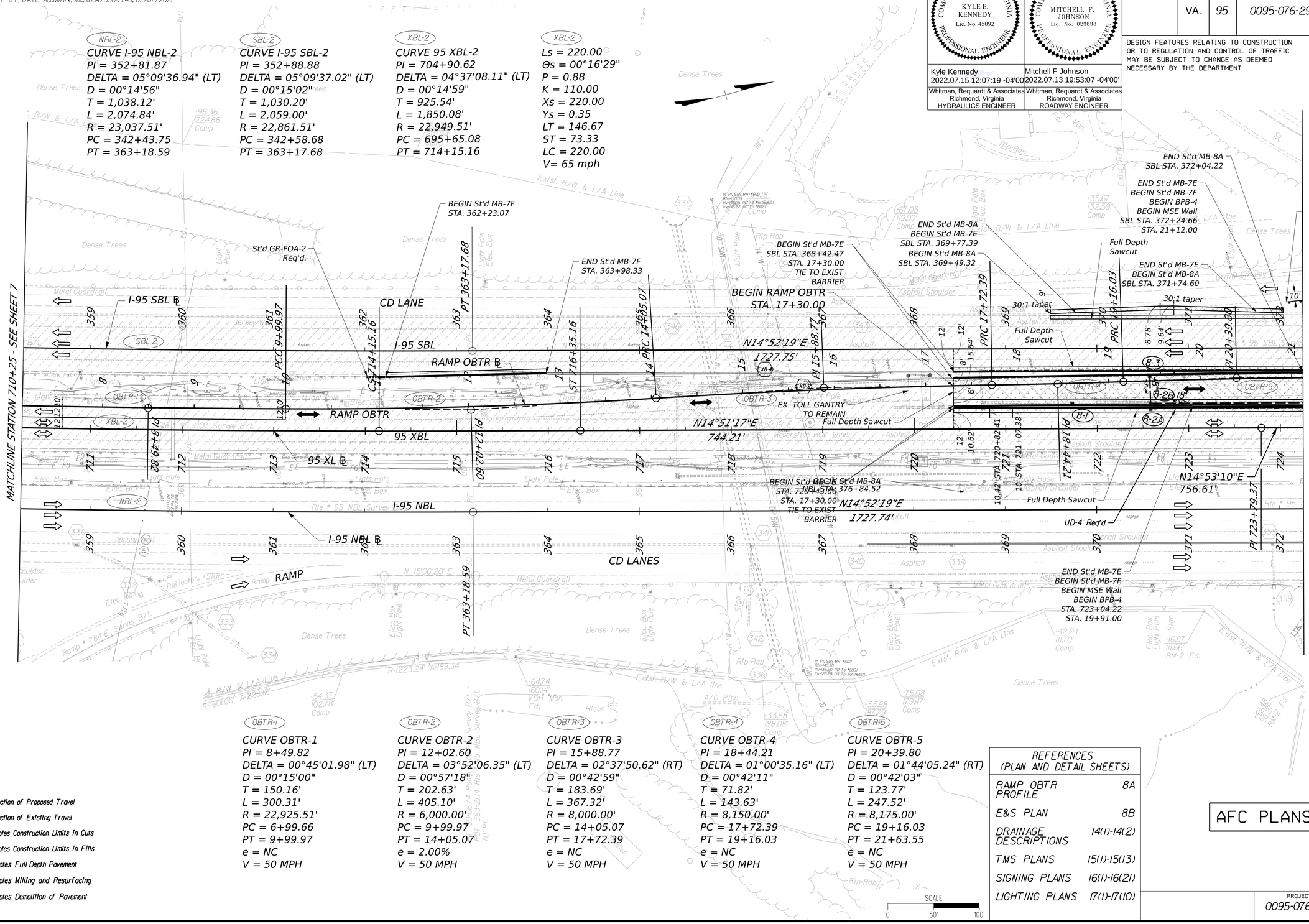

OBTR-1
CURVE OBTR-1
PI = 8+49.82
DELTA = 00°45'01.98" (LT)
D = 00°15'00"
T = 150.16'
L = 300.31'
R = 22,925.51'
PC = 6+99.66
PT = 9+99.97
e = NC
V = 50 MPH

OBTR-2
CURVE OBTR-2
PI = 12+02.60
DELTA = 03°52'06.35" (LT)
D = 00°57'18"
T = 202.63'
L = 405.10'
R = 6,000.00'
PC = 9+99.97
PT = 14+05.07
e = 2.00%
V = 50 MPH

OBTR-3
CURVE OBTR-3
PI = 15+88.77
DELTA = 02°37'50.62" (RT)
D = 00°42'59"
T = 183.69'
L = 367.32'
R = 8,000.00'
PC = 14+05.07
PT = 17+72.39
e = NC
V = 50 MPH

OBTR-4
CURVE OBTR-4
PI = 18+44.21
DELTA = 01°00'35.16" (LT)
D = 00°42'11"
T = 71.82'
L = 143.63'
R = 8,150.00'
PC = 17+72.39
PT = 19+16.03
e = NC
V = 50 MPH

OBTR-5
CURVE OBTR-5
PI = 20+39.80
DELTA = 01°44'05.24" (RT)
D = 00°42'03"
T = 123.77'
L = 247.52'
R = 8,175.00'
PC = 19+16.03
PT = 21+63.55
e = NC
V = 50 MPH

LEGEND
- Direction of Proposed Travel
- Direction of Existing Travel
- C ------ Denotes Construction Limits In Cuts
- F ------ Denotes Construction Limits In Fills
- Denotes Full Depth Pavement
- Denotes Milling and Resurfacing
- Denotes Demolition of Pavement

SCALE 0 50' 100'

REFERENCES (PLAN AND DETAIL SHEETS)	
RAMP OBTR PROFILE	8A
E&S PLAN	8B
DRAINAGE DESCRIPTIONS	14(1)-14(2)
TMS PLANS	15(1)-15(13)
SIGNING PLANS	16(1)-16(21)
LIGHTING PLANS	17(1)-17(10)

AFC PLANS

PROJECT	SHEET NO.
0095-076-299	8

Cell Revised 12/11/12

7/11/2022 4589300I008a.DGN
9:27:24 AM Plotted By: jlopez-ornelas

LIMITED ACCESS HIGHWAY By Resolution of the Highway Commission dated October 4, 1956
By Resolution of the Highway Commission dated January 18, 1973
By Resolution of the Commonwealth Transportation Board dated April 19, 2022

PROJECT MANAGER Rimpal Shah, P.E. (703) 259-2362 (NOVA District)
SURVEYED BY, DATE H&B Surveying and Mapping, LLC (804) 330-3781, 03/09/2021
DESIGN BY Whitman, Requardt & Associates, LLP (804) 272-8700
SUBSURFACE UTILITIES BY, DATE Accumark, Inc. (804) 550-7740, 07/07/2021

KYLE E. KENNEDY Lic. No. 45092 PROFESSIONAL ENGINEER COMMONWEALTH OF VIRGINIA
Kyle Kennedy 2022.07.15 12:07:51 -04'00'
Whitman, Requardt & Associates Richmond, Virginia HYDRAULICS ENGINEER

MITCHELL F. JOHNSON Lic. No. 023838 PROFESSIONAL ENGINEER COMMONWEALTH OF VIRGINIA
Mitchell F Johnson 2022.07.13 19:53:25 -04'00'
Whitman, Requardt & Associates Richmond, Virginia ROADWAY ENGINEER

REVISED	STATE	STATE ROUTE	STATE PROJECT	SHEET NO.
	VA.	95	0095-076-299, C-501	8A

DESIGN FEATURES RELATING TO CONSTRUCTION OR TO REGULATION AND CONTROL OF TRAFFIC MAY BE SUBJECT TO CHANGE AS DEEMED NECESSARY BY THE DEPARTMENT

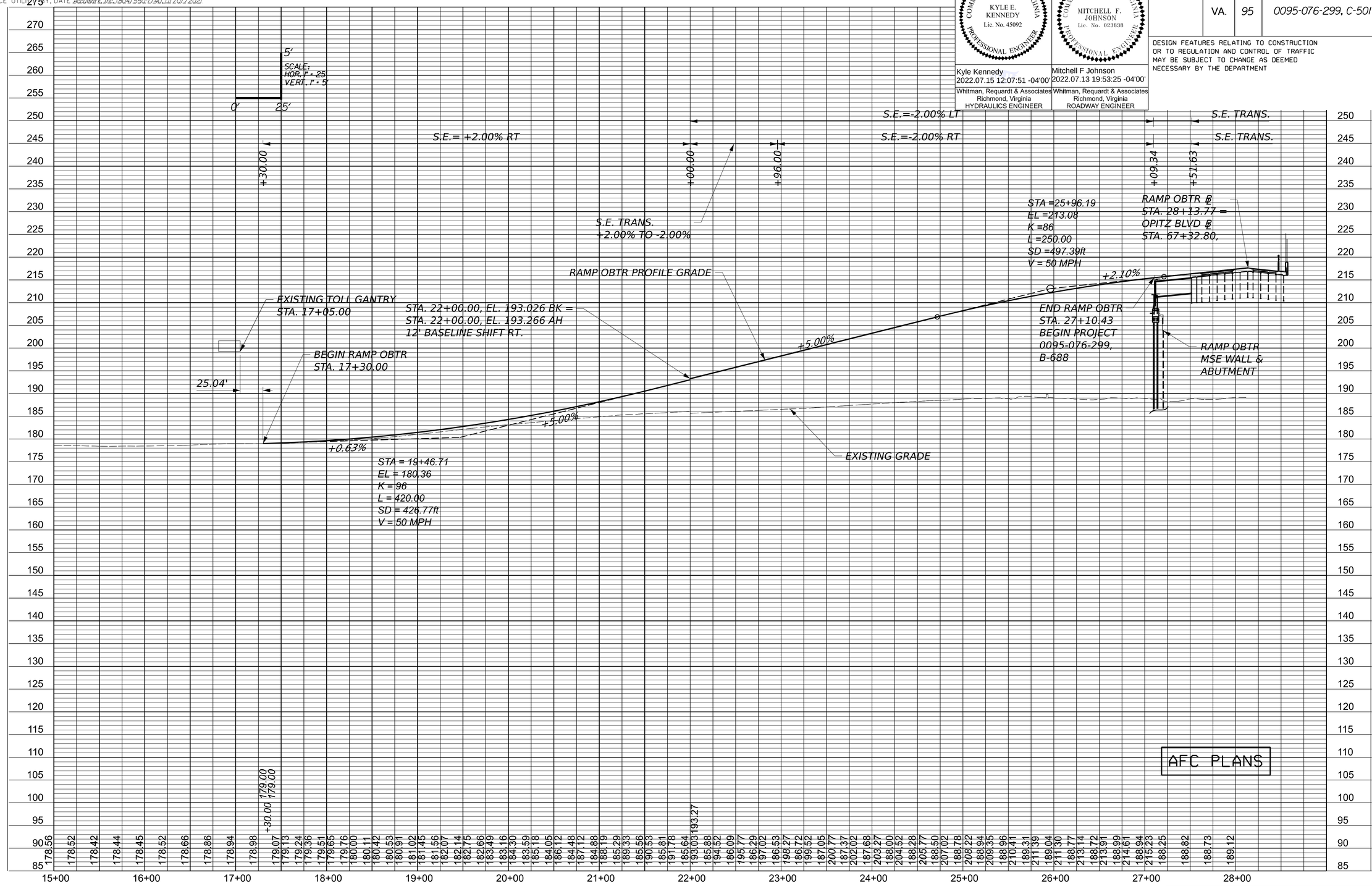

AFC PLANS

	PROJECT	SHEET NO.
	0095-076-299	8A

Cell Revised 12/1/12

7/11/2022 4589300100BB.DGN
9:28:03 AM Plotted By: Jlopez-ornelas

LIMITED ACCESS HIGHWAY By Resolution of the Highway Commission dated October 4, 1956
By Resolution of the Highway Commission dated January 18, 1973
By Resolution of the Commonwealth Transportation Board dated April 19, 2022

PROJECT MANAGER Rimpal Shah, P.E. (703) 259-2362 (NOVA District) _____
SURVEYED BY, DATE H&B Surveying and Mapping, LLC (804) 330-3781, 03/09/2021
DESIGN BY Whitman, Requardt, & Associates, LLP (804) 212-8700 _____
SUBSURFACE UTILITY BY, DATE Accumark, Inc. (804) 550-7740, 07/07/2021

EROSION AND SEDIMENT CONTROL PLAN
PHASE 1

KYLE E. KENNEDY
Lic. No. 45092
COMMONWEALTH OF VIRGINIA
PROFESSIONAL ENGINEER

Kyle Kennedy
2022.07.15 12:08:08 -04'00'
Whitman, Requardt & Associates
Richmond, Virginia
HYDRAULICS ENGINEER

MITCHELL F. JOHNSON
Lic. No. 023038
COMMONWEALTH OF VIRGINIA
PROFESSIONAL ENGINEER

Mitchell F Johnson
2022.07.13 19:53:49 -04'00'
Whitman, Requardt & Associates
Richmond, Virginia
ROADWAY ENGINEER

REVISED	STATE	STATE ROUTE	STATE PROJECT	SHEET NO.
	VA.	95	0095-076-299,C-501	8B

DESIGN FEATURES RELATING TO CONSTRUCTION OR TO REGULATION AND CONTROL OF TRAFFIC MAY BE SUBJECT TO CHANGE AS DEEMED NECESSARY BY THE DEPARTMENT

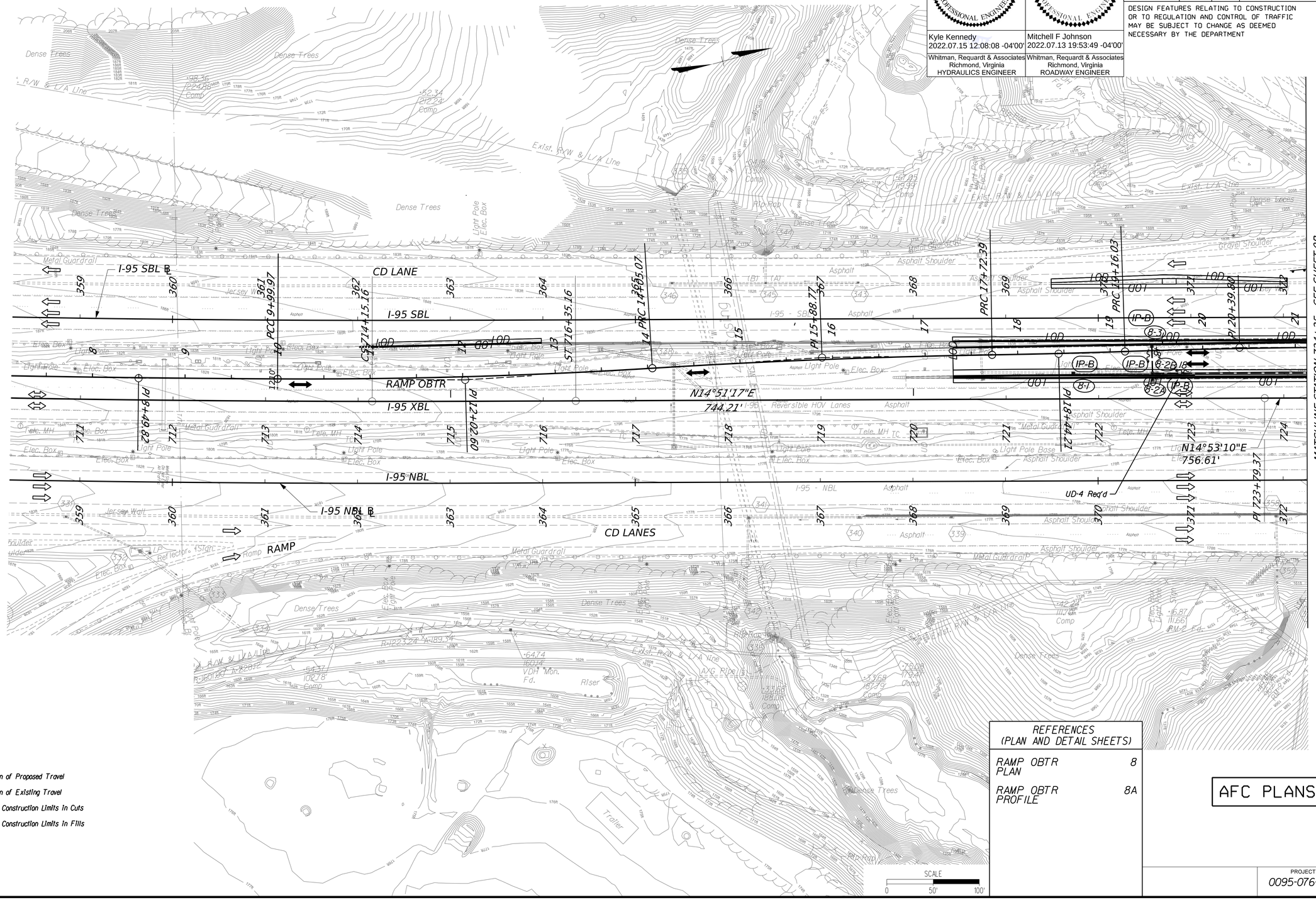

LEGEND
- Direction of Proposed Travel
- Direction of Existing Travel
- C _____ Denotes Construction Limits In Cuts
- F _ _ _ Denotes Construction Limits In Fills

SCALE 0 50' 100'

REFERENCES (PLAN AND DETAIL SHEETS)

RAMP OBTR PLAN	8
RAMP OBTR PROFILE	8A

AFC PLANS

PROJECT	SHEET NO.
0095-076-299	8B

Cell Revised 12/11/12

7/11/2022 4589300I009.DGN
9:29:07 AM Plotted By: jlopez-ornelas

LIMITED ACCESS HIGHWAY

By Resolution of the Highway Commission dated October 4, 1956
By Resolution of the Highway Commission dated January 18, 1973
By Resolution of the Commonwealth Transportation Board dated April 19, 2022

PROJECT MANAGER Rimpal Shah, P.E. (703) 259-2362 (NOVA District) _____
SURVEYED BY, DATE H&B Surveying and Mapping, LLC (804) 330-3781, 03/09/2021
DESIGN BY Whitman, Requardt, & Associates, LLP (804) 212-8700 _____
SUBSURFACE UTILITY BY, DATE Accumark, Inc. (804) 550-7740, 07/07/2021

See Sheet 10 for Utility Owner's List

003
COMMONWEALTH OF VIRGINIA
DEPARTMENT OF HIGHWAY
DB 395 PG 225
DB 698 PG 110
R/W FILE *819(PLAT)
GPIN 8291-76-9471
3.745 AC (CALC)

002
COMMONWEALTH OF VIRGINIA
DB 1250 PG 506
HWY PB 9 PG 314
NO GPIN ASSIGNED
0.654 +/- AC (CALC)

MATCHLINE STATION 64+00 - SEE SHEET 10

NBL-3
CURVE I-95 NBL-3
PI = 396+28.86
DELTA = 07°55'18.96" (RT)
D = 00°15'03"
T = 1,582.53'
L = 3,160.01'
R = 22,854.94'
PC = 380+46.33
PT = 412+06.34

SBL-3
CURVE I-95 SBL-3
PI = 396+40.15
DELTA = 07°55'19.06" (RT)
D = 00°14'56"
T = 1,594.72'
L = 3,184.36'
R = 23,030.99'
PC = 380+45.43
PT = 412+29.79

XBL-3
CURVE 95 XBL-3
PI = 748+39.34
DELTA = 07°24'54.68" (RT)
D = 00°14'49"
T = 1,503.36'
L = 3,002.53'
R = 23,200.00'
PC = 733+35.98
PT = 763+38.51

XBL-3
Ls = 200.00
Θs = 00°14'49"
P = 0.07
K = 100.00
Xs = 200.00
Ys = 0.29
LT = 133.33
ST = 66.67
LC = 200.00
V= 65 MPH

REMOVE FLUME FROM OPITZ
END St'd GR-MGS-1A STA. 64+90.40
St'd GR-FOA-5 Req'd. END St'd CG-7 STA. 65+17.59
PG-2A Ty E Replace Existing Paved Ditch Tie to Slope Flume at Top of Cut
END Prop. Ret. Wall w/ FE-CL SEE WALL PLANS STA. 65+37.71 66.22' RT
BEGIN St'd BPPS SBL STA. 378+59.92
BEGIN St'd BPPS SBL STA. 378+42.79
END St'd BPPS BEGIN St'd GR-MGS-1 SBL STA. 378+42.79
END MSE Wall SBL STA. 378+33.59
END BPB-4 STA. 27+11.13
END St'd MB-7F BEGIN St'd BPPS SBL STA. 377+93.59
END Median Brick Pattern STA. 66+35.09 See Bridge Plans Sheet 69
104.17' LANE TRANS.
154.17' LANE TRANS.
5' Hydraulic Cement Concrete Sidewalk
St'd FE-CL Req'd.
BEGIN Median Brick Pattern STA. 64+65.03 See Bridge Plans Sheet 69
Full Depth Sawcut BEGIN St'd CG-2 STA. 64+89.49
END St'd MS-1A STA. 65+13.65
END St'd CG-7 END St'd CG-2 STA. 65+13.65
St'd FE-CL Req'd. Tie to Existing
BEGIN PROJECT 0095-076-299, B-688
STA. 65+35.17 OPITZ BLVD ℄
OPITZ BLVD STA. 66+88.14= SBL STA. 379+28.29
END St'd BPPS SBL STA. 380+21.92
St'd GR FOA-5 Req'd
BEGIN St'd GR-MGS-1 SBL STA. 380+49.05
END St'd GR-MGS-1 SBL STA. 381+35.05
St'd GR-MGS-2 Req'd
I-95 SBL ℄
END St'd BPPS SBL STA. 380+21.79
RAMP OBTR STA. 28+13.77= OPITZ BLVD STA. 67+32.80
PC 380+45.43
I-95 SBL
SBL-3
OPITZ BLVD ℄
St'd. IA-1 Req'd.
St'd GR-MGS-4 Req'd
95 XBL
XBL-3
I-95XL ℄
I-95 NBL
NBL-3
END St'd GR-MGS-1 STA. 385+44.24
St'd GR-MGS-3 Req'd.
I-95 NBL ℄
St'd GR-MGS-2 Req'd.
BEGIN St'd GR-MGS-1 STA. 382+92.64
GENERATOR SITE H117A SEE SHEET 2B(10)
OPITZ BLVD STA. 67+75.73= XBL STA 731+24.61
PC 380+46.33
OPITZ BLVD STA. 68+64.29= NBL STA. 379+21.98
END St'd GR-MGS-1 STA. 732+43.98
St'd GR-MGS-4 Req'd. St'd GR-FOA-5 Req'd.
END BPPS STA. 732+14.77
BEGIN St'd CG-7 STA. 70+24.73 St'd GR-FOA-5 Req'd
BEGIN St'd GR-MGS-1A STA. 70+53.42
Ground Mounted Flexible Post Delineators
MODIFY EXISTING SWM FACILITY
END St'd CG-7 END St'd GR-MGS-1A BEGIN St'd CG-3 STA. 70+69.34
PG-2A Ty BI D=6" 4:1 Side Slopes
St'd GR-MGS-2 Req'd
5' Hydraulic Cement Concrete Sidewalk
MATCHLINE STATION 71+00 - SEE SHEET 11

MATCHLINE STATION 724+25 - SEE SHEET 8
MATCHLINE STATION 738+25 - SEE SHEET 12

BEGIN St'd GR-MGS-1 SBL STA. 372+07.00 St'd MGS-3 Req'd.
12' BASELINE SHIFT STA. 22+00.00 RAMP OBTR BK = STA. 22+00.00 RAMP OBTR AH
St'd GR-MGS-1 Req'd
END St'd GR-MGS-1 SBL STA. 373+77.00
CD LANE
BEGIN PROJECT 0095-076-299, B-688
END RAMP OBTR STA. 27+10.43
POT 22+10.00
REMOVE EX. INLET
UD-4 Req'd
N14°52'19"E 1727.75'
Full Depth Sawcut
I-95 SBL
RAMP OBTR
N14°52'19"E 613.77'
ABANDON EX. PIPE
N14°53'10"E 756.61'
95 XBL
RAMP OBTR ℄
END St'd MB-7F BEGIN BPPS STA. 729+91.99
END BPB-4 STA. 27+10.43
St'd GR-MGS-4 Req'd.
St'd GR-FOA-5 Req'd.
END MSE Wall STA. 730+31.99
END St'd BPPS, BEGIN GR-MGS-1 STA. 730+70.38
BEGIN BPPS STA. 730+09.75
BEGIN St'd GR-MGS-1, STA. 730+97.57 SBL STA. 378+99.34
Full Depth Sawcut 30:1
BEGIN St'd MB-8A NBL STA. 376+84.52
END St'd MB-8A BEGIN St'd MB-7E NBL STA. 377+00.22
END St'd MB-7E NBL STA. 378+42.92
CD LANES
RAMP
END PROJECT 0095-076-299, B-688
STA. 70+05.65 OPITZ BLVD ℄
BEGIN Prop. RW-3
BEGIN BPB-3 STA. 70+28.59
BEGIN I-95 NB LOOP STA. 50+00.00 = OPITZ BLVD STA. 70+28.47, 60.08' RT
S72°47'08"E 130.99'
REMOVE EX. CONC.FLUME
BEGIN St'd MB-7E STA. 70+26.33 Full Depth Sawcut
REMOVE EX. CONC.FLUME
OPITZ BOULEVARD
S72°47'08"E 1,180.27'

LEGEND
- Direction of Proposed Travel
- Direction of Existing Travel
- C ----- Denotes Construction Limits In Cuts
- F - - - Denotes Construction Limits In Fills
- Denotes Full Depth Pavement
- Denotes Milling and Resurfacing
- Denotes Demolition of Pavement
- Denotes Shoulder Strengthening
- Denotes Median Brick Pattern

SCALE 0 50' 100'

REFERENCES (PLAN AND DETAIL SHEETS)	
GEN. SITE PLAN	2B(10)
OPITZ BLVD PROFILE	9A
OBTR PROFILE	8A
E&S PLAN	9B
DETENTION BASIN MOD. DETAILS	9C
DRAINAGE DESC.	14(1)-14(2)
TMS PLANS	15(1)-15(13)
SIGNING PLANS	16(1)-16(21)
LIGHTING PLANS	17(1)-17(10)
SIGNAL PLANS	18(1)-18(5)

AFC PLANS

Kyle E. Kennedy Lic. No. 45092 Professional Engineer
Kyle Kennedy 2022.07.15 12:08:25 -04'00'
Whitman, Requardt & Associates Richmond, Virginia HYDRAULICS ENGINEER

Mitchell F. Johnson Lic. No. 023838 Professional Engineer
Mitchell F Johnson 2022.07.13 19:54:08 -04'00'
Whitman, Requardt & Associates Richmond, Virginia ROADWAY ENGINEER

REVISED	STATE	STATE ROUTE	STATE PROJECT	SHEET NO.
	VA.	95	0095-076-299,C-501	9

DESIGN FEATURES RELATING TO CONSTRUCTION OR TO REGULATION AND CONTROL OF TRAFFIC MAY BE SUBJECT TO CHANGE AS DEEMED NECESSARY BY THE DEPARTMENT

PROJECT	SHEET NO.
0095-076-299	9

Roll Revised 12/11/12

7/11/2022 45893001009a.dgn
10:29:40 AM Plotted By: jlopez-ornelas

LIMITED ACCESS HIGHWAY By Resolution of the Highway Commission dated October 4, 1956.
By Resolution of the Highway Commission dated January 18, 1973.
By Resolution of the Commonwealth Transportation Board dated April 19, 2022

PROJECT MANAGER Rimpal Shah, P.E. (703) 259-2362 (NOVA District)
SURVEYED BY, DATE H&B Surveying and Mapping, LLC (804) 330-3781 03/09/2021
DESIGN BY Whitman, Requardt & Associates, LLP (804) 272-8700
SUBSURFACE UTILITY BY, DATE Accumark, Inc. (804) 550-7740 07/07/2021

OPITZ BLVD PROFILE

5'
SCALE:
HOR. 1" = 25'
VERT. 1" = 5'
0' 25'

WB/EB S.E. = -2.00%

BEGIN PROJECT 0095-076-299, B-688
STA. 65+35.17 OPITZ BLVD ℄

STA = 66+16.99
EL = 219.16
K = 132
L = 399.00
SD = 856.81ft
V = 50 MPH

OPITZ BLVD STA. 67+32.80 =
OBTR STA. 28+13.77

OPITZ BLVD
PROFILE GRADE

STA = 69+56.99
EL = 215.37
K = 126
L = 281.00
SD = 623.40ft
V = 50 MPH

END PROJECT
0095-076-299, B-688
STA. 70+05.65
OPITZ BLVD ℄

+1.91%
-1.11%
-1.11%
-3.35%

min. vert. clr. 17'-2" RAMP
min. vert. clr. 16'-9" I 95 SBL
95 XBL min. vert. clr. 17'-0"
min. vert. clr. 22'-9"
I-95 NBL min. vert. clr. 22'-11" CD LANES

OPITZ BLVD STA. 70+28.47, 60.08' RT =
NB I-95 RAMP STA. 50+00.00

64+00	65+00	66+00	67+00	68+00	69+00	70+00	71+00
214.90	215.03	215.34	215.50	215.67	215.94	216.54	216.33
216.88	216.68	217.25	216.97	203.91	217.22	191.86	217.42
192.48	217.58	192.24	217.69	192.53	217.75	193.35	217.76
193.21	217.72	192.12	217.64	189.08	217.51	189.65	217.34
188.96	217.11	183.23	216.84	185.31	216.52	185.56	216.15
185.30	215.73	184.70	215.26	183.91	214.74	192.59	214.17
204.10	213.55	212.95	212.88	212.37	212.17	211.79	211.40

REVISED	STATE	STATE ROUTE	STATE PROJECT	SHEET NO.
	VA.	95	0095-076-299, C-501	9A

DESIGN FEATURES RELATING TO CONSTRUCTION OR TO REGULATION AND CONTROL OF TRAFFIC MAY BE SUBJECT TO CHANGE AS DEEMED NECESSARY BY THE DEPARTMENT

COMMONWEALTH OF VIRGINIA
KYLE E. KENNEDY
Lic. No. 45092
PROFESSIONAL ENGINEER

Kyle Kennedy
2022.07.15 12:08:39 -04'00'

Whitman, Requardt & Associates
Richmond, Virginia
HYDRAULICS ENGINEER

COMMONWEALTH OF VIRGINIA
MITCHELL F. JOHNSON
Lic. No. 023838
PROFESSIONAL ENGINEER

Mitchell F Johnson
2022.07.13 19:54:28 -04'00'

Whitman, Requardt & Associates
Richmond, Virginia
ROADWAY ENGINEER

AFC PLANS

	PROJECT	SHEET NO.
	0095-076-299	9A

Roll Revised 12/11/12

7/11/2022 45893001009b.DGN
9:31:00 AM Plotted By: jlopez-ornelas

LIMITED ACCESS HIGHWAY By Resolution of the Highway Commission dated October 4, 1956
By Resolution of the Highway Commission dated January 18, 1973
By Resolution of the Commonwealth Transportation Board dated April 19, 2022

PROJECT MANAGER Rimpal Shah, P.E. (703) 259-2362 (NOVA District)
SURVEYED BY, DATE H&B Surveying and Mapping, LLC (804) 330-3781, 03/09/2021
DESIGN BY Whitman, Requardt, & Associates, LLP (804) 272-8700
SUBSURFACE UTILITY BY, DATE Accumark, Inc. (804) 550-7740, 07/07/2021

EROSION AND SEDIMENT CONTROL PLAN
PHASE 1

REVISED	STATE	STATE ROUTE	STATE PROJECT	SHEET NO.
	VA.	95	0095-076-299,C-501	9B

DESIGN FEATURES RELATING TO CONSTRUCTION OR TO REGULATION AND CONTROL OF TRAFFIC MAY BE SUBJECT TO CHANGE AS DEEMED NECESSARY BY THE DEPARTMENT

COMMONWEALTH OF VIRGINIA
KYLE E. KENNEDY
Lic. No. 45092
PROFESSIONAL ENGINEER

Kyle Kennedy
2022.07.15 12:08:55 -04'00'
Whitman, Requardt & Associates
Richmond, Virginia
HYDRAULICS ENGINEER

COMMONWEALTH OF VIRGINIA
MITCHELL F. JOHNSON
Lic. No. 023838
PROFESSIONAL ENGINEER

Mitchell F Johnson
2022.07.13 19:54:50 -04'00'
Whitman, Requardt & Associates
Richmond, Virginia
ROADWAY ENGINEER

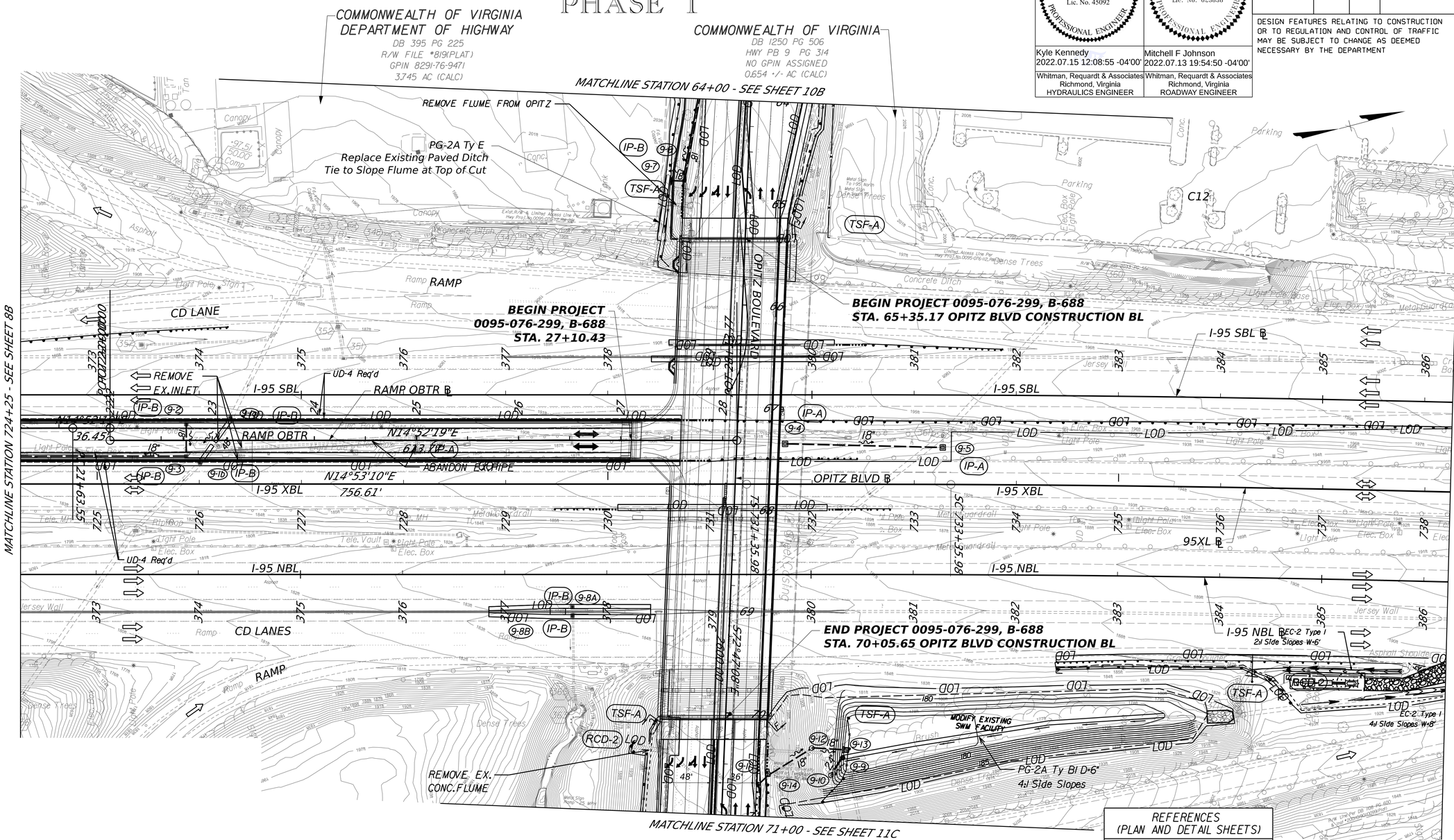

LEGEND

- Direction of Proposed Travel
- Direction of Existing Travel
- C - - - - Denotes Construction Limits in Cuts
- F - - - Denotes Construction Limits in Fills

REFERENCES (PLAN AND DETAIL SHEETS)	
OPITZ BLVD PLAN	9
OPITZ BLVD PROFILE	9A
DETENTION BASIN MOD. DETAILS	9C

AFC PLANS

SCALE 0 50' 100'

PROJECT	SHEET NO.
0095-076-299	9B

Cell Revised 12/11/12

LIMITED ACCESS HIGHWAY
By Resolution of the Highway Commission dated October 4, 1956
By Resolution of the Highway Commission dated January 18, 1973
By Resolution of the Commonwealth Transportation Board dated April 19, 2022

PROJECT MANAGER Rimpal Shah, P.E. (703) 259-2362 (NOVA District)
SURVEYED BY, DATE H&B Surveying and Mapping, LLC (804) 330-3781, 03/09/2021
DESIGN BY Whitman, Requardt, & Associates, LLP (804) 272-8700
SUBSURFACE UTILITY BY, DATE Accumark, Inc. (804) 550-7740, 07/07/2021

COMMONWEALTH OF VIRGINIA
KYLE E. KENNEDY
Lic. No. 45092
PROFESSIONAL ENGINEER

Kyle Kennedy
2022.07.15 12:09:14 -04'00'
Whitman, Requardt & Associates
Richmond, Virginia
HYDRAULICS ENGINEER

REVISED	STATE	STATE ROUTE	STATE PROJECT	SHEET NO.
	VA.	95	0095-076-299, C-501	9C

DESIGN FEATURES RELATING TO CONSTRUCTION OR TO REGULATION AND CONTROL OF TRAFFIC MAY BE SUBJECT TO CHANGE AS DEEMED NECESSARY BY THE DEPARTMENT

DETENTION BASIN MODIFICATION DETAILS

Elevation	Area (ft²)	Volume Increment (ac-ft)	Volume Cummulative (ac-ft)
175.15	10	0	0
175.95	600	0	0
176	6,070	0.002	0.003
177	11,136	0.195	0.197
178	13,732	0.285	0.482
179	16,128	0.342	0.825
180	18,532	0.398	1.222
181	21,969	0.464	1.686

BASIN CROSS SECTION (SECTION B-B)
(Not to Scale)

BASIN PROFILE (SECTION A-A)
(Not to Scale)

ELEVATION VIEW
SWM DRAINAGE STRUCTURE

(9-9) 8.7' Std.SWM-1 Req.(48" Dia Base)
Crest Elev = 179.95
Bottom Elev = 171.25
Std.Trash Rack Req.
3" Dia.Low Flow Orifice Req.,Inv = 175.25

(9-9)-(9-10) 15'- 24" Concrete Pipe Req.
Inv (In)=175.25; Inv (Out)=175.20
Std. Concrete Cradle Req
(See Road and Bridge Std.SWM-DR)

(9-10) 5.1 LF Std.MH-1 or 2 Req.
1 Std.MH-1 Frame & Cover Req.
Inv = 175.20
Modify Existing Structure with MH-1 top

(EX371) 5.1 LF Std.MH-1 or 2 Req.
1 Std.MH-1 Frame & Cover Req.
Inv = 175.20
Modify Existing Structure with MH-1 top

AFC PLANS

Sequence of Construction
1. Install E&S Controls (Basin is not to be used as a temp. sediment basin.)
2. Take existing riser at proposed 9-10 offline. Install manhole for 9-10 and new riser 9-9.
3. Install E&S controls at SWM Risers
4. Excavate Basin, grade Opitz Blvd fill slope, install PG-2A.
5. Seed and stablize disturbed areas.
6. Removed E&S controls.

The Contractor shall provide "As-Built" drawings of all stormwater management facilities. The "As-Built" drawings shall show the actual finished ground contours, outlet structure dimensions and elevations, etc. as they exist at the completion of the project. These drawings shall be signed and sealed by the Licensed Professional Engineer or Land Surveyor registered in the State of Virginia. All costs shall be included under Construction Surveying.

SCALE 0 50' 100'

REFERENCES (PLAN AND DETAIL SHEETS)	
OPITZ BLVD PLAN	9
OPITZ BLVD PROFILE	9A
OBTR PROFILE	8A
E&S PLAN	9B

7/11/2022 9:32:06 AM — 4589300101O.DGN — Plotted By: jlopez-ornelas

LIMITED ACCESS HIGHWAY — By Resolution of the Highway Commission dated October 4, 1956. By Resolution of the Highway Commission dated January 18, 1973. By Resolution of the Commonwealth Transportation Board dated April 19, 2022

PROJECT MANAGER Rimpal Shah, P.E. (703) 259-2362 (NOVA District)
SURVEYED BY, DATE T&B Surveying and Mapping, LLC (804) 330-3781, 03/09/2021
DESIGN BY Whitman, Requardt, & Associates, LLP (804) 212-8700
SUBSURFACE UTILITY BY, DATE Accumark, Inc. (804) 550-2740, 07/07/2021

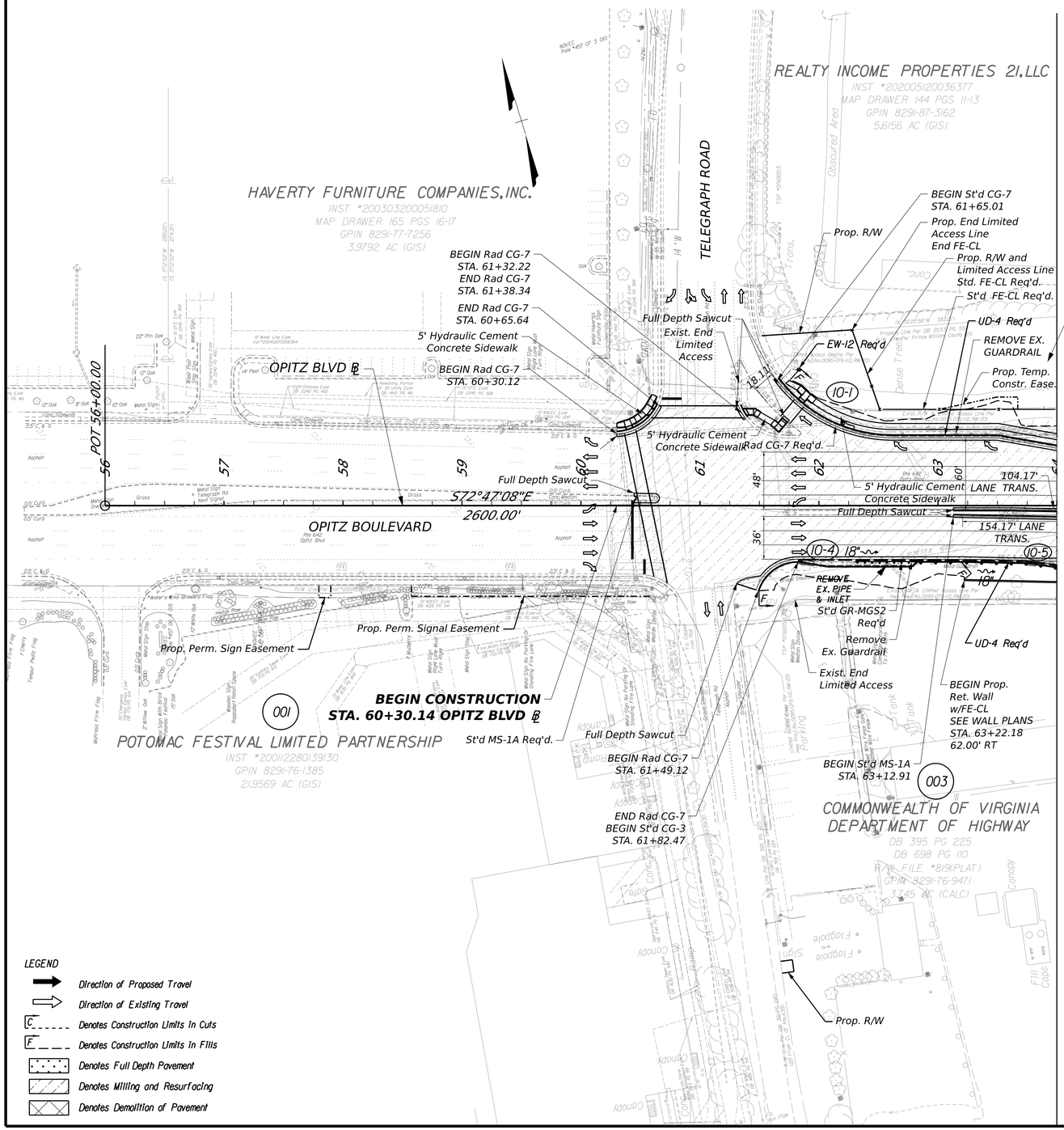

KYLE E. KENNEDY
Lic. No. 45092
COMMONWEALTH OF VIRGINIA
PROFESSIONAL ENGINEER

Kyle Kennedy
2022.07.15 12:09:47 -04'00'

Whitman, Requardt & Associates
Richmond, Virginia
HYDRAULICS ENGINEER

MITCHELL F. JOHNSON
Lic. No. 023838
COMMONWEALTH OF VIRGINIA
PROFESSIONAL ENGINEER

Mitchell F Johnson
2022.07.13 19:55:28 -04'00'

Whitman, Requardt & Associates
Richmond, Virginia
ROADWAY ENGINEER

REVISED	STATE	STATE ROUTE	STATE PROJECT	SHEET NO.
	VA.	95	0095-076-299,C-501	10

DESIGN FEATURES RELATING TO CONSTRUCTION OR TO REGULATION AND CONTROL OF TRAFFIC MAY BE SUBJECT TO CHANGE AS DEEMED NECESSARY BY THE DEPARTMENT

Utility Owner's List

Water & Sewer:
Prince William County Service Authority
4 County Complex Court
Woodbridge, VA 22192
Samantha (Sam) Kearney PE 703-335-7925
skearney@pwcsa.org
Luke Engbert Work: 703-393-4467
Cell: 540-642-6288
lengbert@pwcsa.org

Street Lighting:
Richard "Ricky" Hagstrom
Prince William County
Street Lighting Program Coordinator
703-792-6823
rhagstrom@pwcgov.org

Power:
Dominion Energy
7500 W Broad St
Richmond, VA 23294
Alec T. Hagerman
Cell: 804-366-9344
Alec.T.Hagerman@dominionenergy.com

Northern Virginia Electric Cooperative
Manager, Field Services
P.O. Box 2710
Manassas, VA 20108
Dale Diffenbaugh
Office: 703-392-1720
Cell: 703-926-7661
Ddiffenbaugh@Novec.com

Gas:
Washington Gas
Mark Tajnai PE PMP
Work: 703-750-5667
Cell: 703-408-6534
MTajnai@washgas.com

Telecomm:
Comcast
Mark Slebrch
11101 University Blvd
Manassas, VA 20110
Cell: 540-553-1415
Mark_Slebrch@comcast.com

Cox Communications
Patricio (Jeff) Acierto
7741 Southern Drive
Springfield, VA 22150
703-480-7812
Patricio.Acierto@cox.com

Verizon Virginia Inc.
Joe Zych
6014 Windsor Drive
Fredericksburg, VA 22407
540-903-4188
joezych@msn.com

SummitIG LLC
Steve Ragland
22375 Brodrick Dr., Suite 165
Dulles, VA 20166
Work: 804-317-4483
Cell: 703-376-3695
sragland@summitig.com

LUMEN (Qwest)
Samantha Meyer
Business Analyst - Relocations
Tulsa, OK
relocations@lumen.com

REFERENCES (PLAN AND DETAIL SHEETS)	
OPITZ BLVD PROF.	10A
E&S PLAN	10B
RW PLAN	10RW
DRAINAGE DESC.	14(1)-14(2)
TMS PLANS	15(1)-15(13)
SIGNING PLANS	16(1)-16(21)
LIGHTING PLANS	17(1)-17(10)
SIGNAL PLANS	18(1)-18(5)

SCALE 0 50' 100'

AFC PLANS

PROJECT	SHEET NO.
0095-076-299	10

Cell Revised 12/11/12

7/11/2022 458930010l0a.dgn
9:32:25 AM Plotted By: jlopez-ornelas

LIMITED ACCESS HIGHWAY By Resolution of the Highway Commission dated October 4, 1956.
By Resolution of the Highway Commission dated January 18, 1973.
By Resolution of the Commonwealth Transportation Board dated April 19, 2022

PROJECT MANAGER Rimpal Shah, P.E. (703) 259-2362 (NOVA District)
SURVEYED BY, DATE H&B Surveying and Mapping, LLC (804) 330-3781 03/09/2021
DESIGN BY Whitman, Requardt & Associates, LLP (804) 272-8700
SUBSURFACE UTILITY BY, DATE Accumark, Inc. (804) 550-7740 07/07/2021

OPITZ BLVD PROFILE

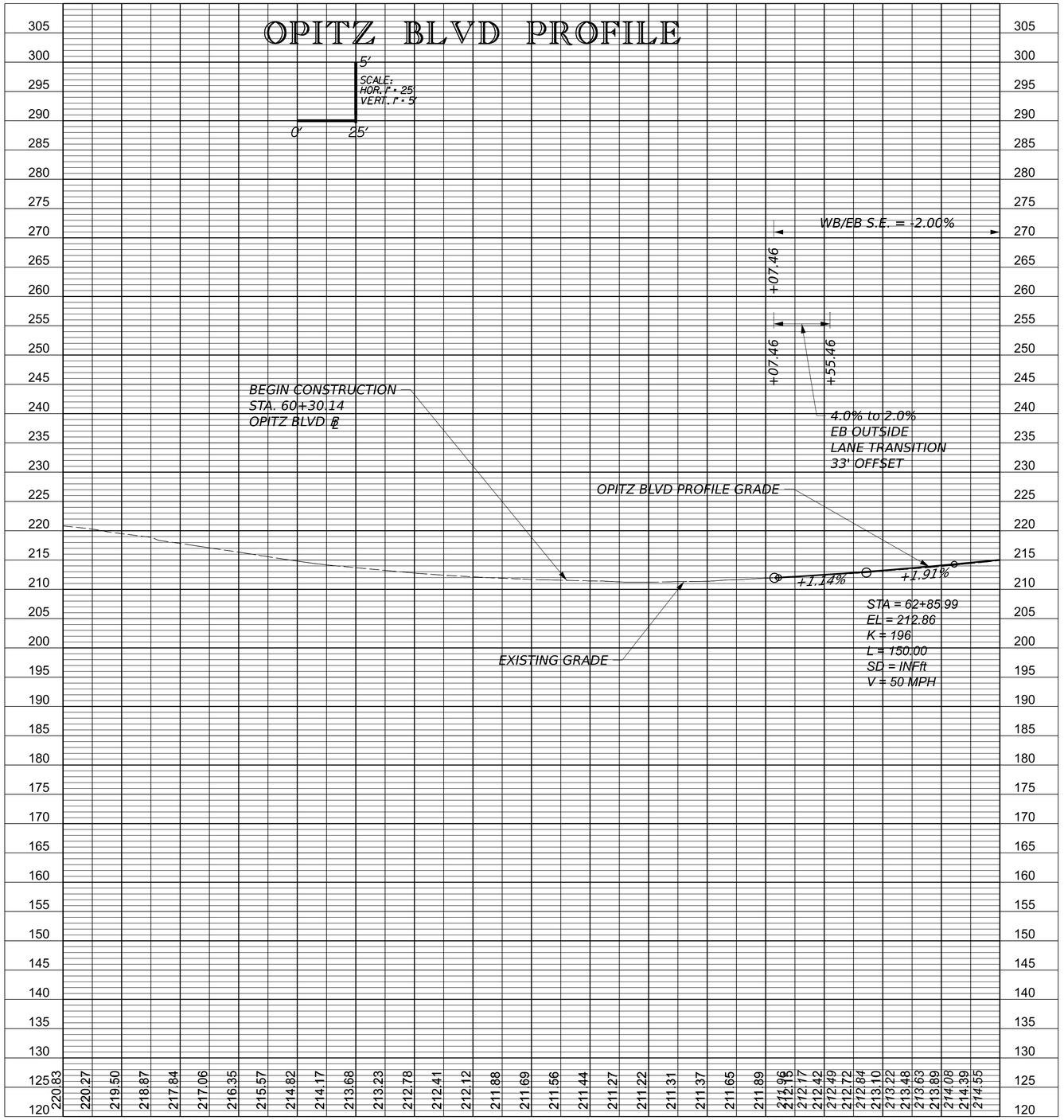

Kyle Kennedy	Mitchell F Johnson
2022.07.15 12:10:04 -04'00'	2022.07.13 19:55:50 -04'00'
Whitman, Requardt & Associates Richmond, Virginia HYDRAULICS ENGINEER	Whitman, Requardt & Associates Richmond, Virginia ROADWAY ENGINEER

COMMONWEALTH OF VIRGINIA — KYLE E. KENNEDY — Lic. No. 45092 — PROFESSIONAL ENGINEER

COMMONWEALTH OF VIRGINIA — MITCHELL F. JOHNSON — Lic. No. 023838 — PROFESSIONAL ENGINEER

REVISED	STATE	STATE ROUTE	STATE PROJECT	SHEET NO.
	VA.	95	0095-076-299, C-501	10A

DESIGN FEATURES RELATING TO CONSTRUCTION OR TO REGULATION AND CONTROL OF TRAFFIC MAY BE SUBJECT TO CHANGE AS DEEMED NECESSARY BY THE DEPARTMENT

AFC PLANS

PROJECT	SHEET NO.
0095-076-299	10A

Cell Revised 12/11/12

7/11/2022 4589300101Ob.DGN
9:32:53 AM Plotted By: jlopez-ornelas

LIMITED ACCESS HIGHWAY By Resolution of the Highway Commission dated October 4, 1956.
By Resolution of the Highway Commission dated January 18, 1973.
By Resolution of the Commonwealth Transportation Board dated April 19, 2022

PROJECT MANAGER Rimpal Shah, P.E. (703) 259-2362 (NOVA District) _____
SURVEYED BY, DATE B&B Surveying and Mapping, LLC (804) 330-3781, 03/09/2021
DESIGN BY Whitman, Requardt & Associates, LLP (804) 212-8700 _____
SUBSURFACE UTILITY BY, DATE Accumark, Inc. (804) 550-2740, 07/07/2021

EROSION AND SEDIMENT CONTROL PLAN
PHASE 1

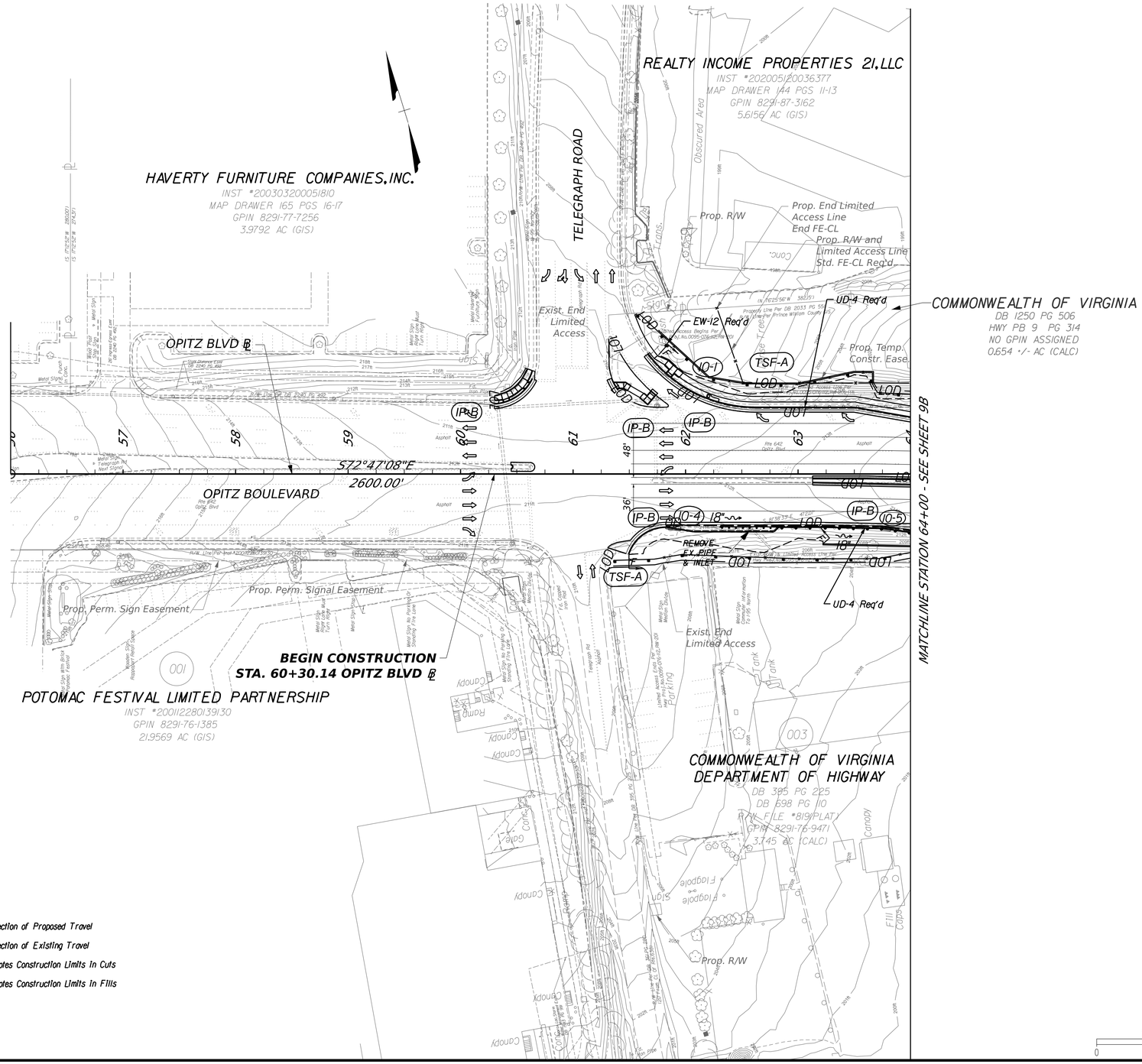

LEGEND
- Direction of Proposed Travel
- Direction of Existing Travel
- C _____ Denotes Construction Limits In Cuts
- F _ _ _ Denotes Construction Limits In Fills

SCALE 0 50' 100'

REFERENCES (PLAN AND DETAIL SHEETS)	
OPITZ BLVD PLAN	10
OPITZ BLVD PROFILE	10A

AFC PLANS

REVISED	STATE	STATE ROUTE	STATE PROJECT	SHEET NO.
	VA.	95	0095-076-299,C-501	10B

DESIGN FEATURES RELATING TO CONSTRUCTION OR TO REGULATION AND CONTROL OF TRAFFIC MAY BE SUBJECT TO CHANGE AS DEEMED NECESSARY BY THE DEPARTMENT

COMMONWEALTH OF VIRGINIA KYLE E. KENNEDY Lic. No. 45092 PROFESSIONAL ENGINEER

Kyle Kennedy
2022.07.15 12:10:48 -04'00'
Whitman, Requardt & Associates
Richmond, Virginia
HYDRAULICS ENGINEER

COMMONWEALTH OF VIRGINIA MITCHELL F. JOHNSON Lic. No. 023838 PROFESSIONAL ENGINEER

Mitchell F Johnson
2022.07.13 19:56:05 -04'00'
Whitman, Requardt & Associates
Richmond, Virginia
ROADWAY ENGINEER

PROJECT	SHEET NO.
0095-076-299	10B

7/8/2022 4589300101Orw.DGN
4:21:25 PM Plotted By: rbrown

LIMITED ACCESS HIGHWAY By Resolution of the Highway Commission dated October 4, 1956.
By Resolution of the Highway Commission dated January 18, 1973.
By Resolution of the Commonwealth Transportation Board dated April 19, 2022

PROJECT MANAGER Rimpal Shah, P.E. (703) 259-2362 (NOVA District)
SURVEYED BY, DATE H&B Surveying and Mapping, LLC (804) 330-3781, 03/09/2021
DESIGN BY Whitman, Requardt & Associates, LLP (804) 272-8700
SUBSURFACE UTILITY BY, DATE Accutrark, Inc. (804) 550-7740, 07/07/2021

COMMONWEALTH OF VIRGINIA
LESLIE R. BYRNSIDE
Lic. No. 002362
LAND SURVEYOR

Leslie R Byrnside
2022.07.08 16:54:53-04'00'

H&B Surveying and Mapping
Richmond, Virginia
LAND SURVEYOR

REVISED	STATE	STATE ROUTE	STATE PROJECT	SHEET NO.
	VA.	95	0095-076-299,C-501	10RW

DESIGN FEATURES RELATING TO CONSTRUCTION OR TO REGULATION AND CONTROL OF TRAFFIC MAY BE SUBJECT TO CHANGE AS DEEMED NECESSARY BY THE DEPARTMENT

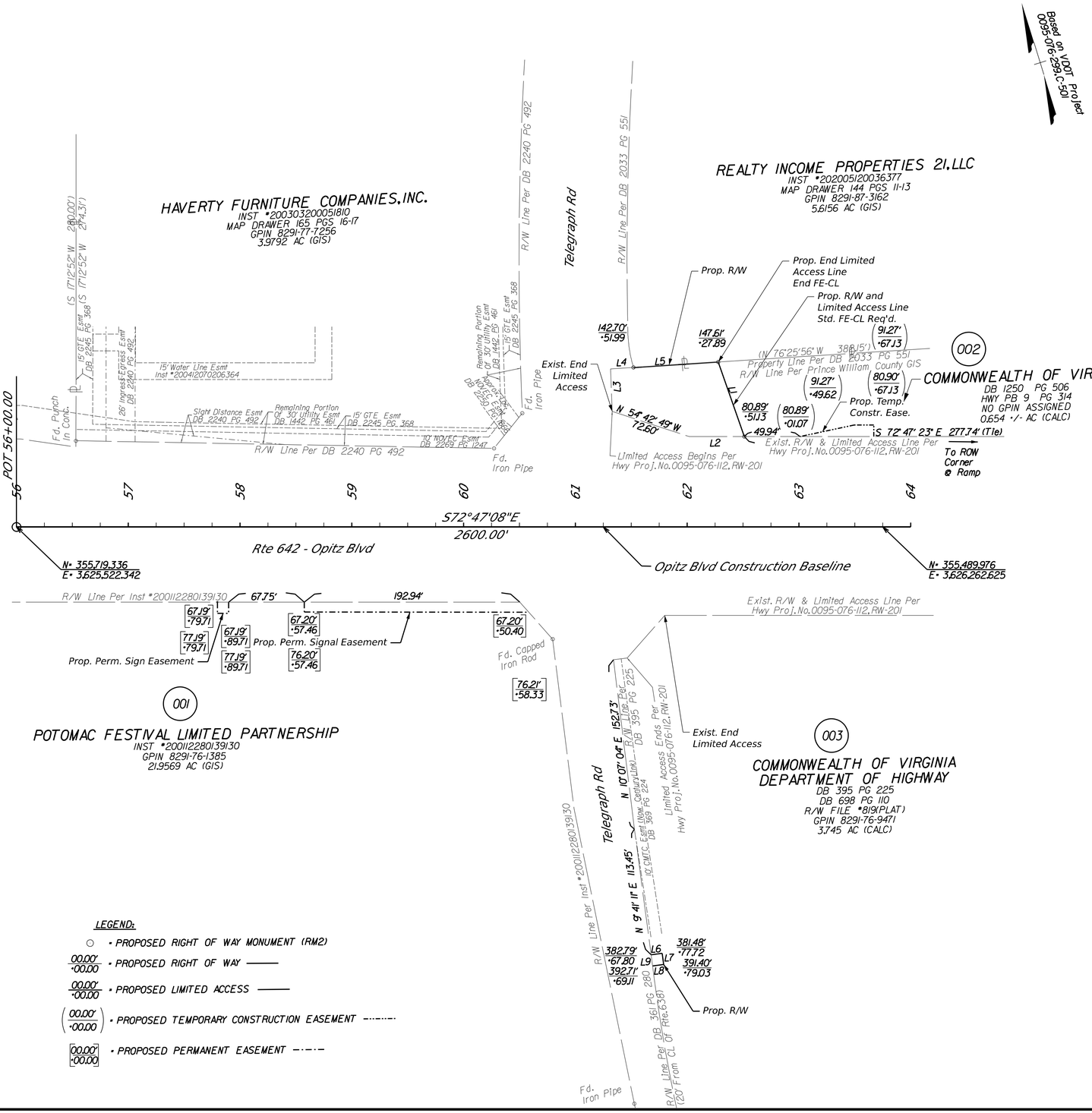

Line Table

Line	Bearing	Distance
L1	S 1°59'33" E	70.66'
L2	N 72°47'23" W	49.17'
L3	N 15°02'17" E	38.00'
L4	S 76°29'10" E	20.53'
L5	S 76°29'10" E	76.05'
L6	S 80°18'49" E	10.00'
L7	S 09°41'11" W	10.00'
L8	N 80°18'49" W	10.00'
L9	N 09°41'11" E	10.00'

Area Table

Parcel	Proposed Right-of-Way Take	Proposed Temp. Const. Easement	Proposed Permanent Sign Easement	Proposed Permanent Signal Easement
	(Ac. or SF)	(Ac. or SF)	(Ac. or SF)	(Ac. or SF)
001			100 SF	1,772 SF
002	6,070 SF	433 SF		
003	100 SF			

LEGEND:

- ○ • PROPOSED RIGHT OF WAY MONUMENT (RM2)
- 00.00' / 00.00 • PROPOSED RIGHT OF WAY ——
- 00.00' / 00.00 • PROPOSED LIMITED ACCESS ——
- (00.00' / 00.00) • PROPOSED TEMPORARY CONSTRUCTION EASEMENT ----·----
- [00.00' / 00.00] • PROPOSED PERMANENT EASEMENT —·—·—

Notes:

1. This Right-of-Way Sheet is Based Upon a Field Run Perimeter Survey of the Existing and Proposed R/W Limits. All Other Adjoining/Departing Boundary Lines Shown are Compiled From Various Sources: Found Field Monumentation, Metes and Bounds Description and Recorded Plats. The Adjoining Lines Do Not Represent a Field Run Survey of the Adjoining Properties and are a Best Fit Based on Compiled Data. All Areas Shown for R/W Takes and Easements are Approximate Only. See Right-of-Way Sheet 1C.
2. All of the Properties Physical Improvements are not Shown Hereon.
3. This Plan Sheet was Prepared Without the Benefit of a Title Report and May Not Show All Easements Which May Affect the Property Shown Hereon.
4. No Designation or Location of Subsurface Utilities were Performed During Preparation of This Plan Sheet.
5. This Survey Datum Is Based on VDOT Project #0095-076-299, C-501, UPC #116663.
6. No Cemetery Sites Were Observed / Visible on the Subject Properties.
7. I Hereby Certify That This Plan Sheet Is Correct to the Best Of My Knowledge and Belief, and This Plan Sheet Complies With The Minimum Standards and Procedures as Established By The Virginia Department Of Transportation's Location and Design Division.
8. Coordinate Values Shown Hereon Are VDOT Project Coordinates.
9. All Monumentation to be Set Within 6 Months of the Completion of Construction.

SCALE	PROJECT	SHEET NO.
0 50' 100'	0095-076-299	10RW

Cell Revised 12/11/12

LIMITED ACCESS HIGHWAY

By Resolution of the Highway Commission dated October 4, 1956.
By Resolution of the Highway Commission dated January 18, 1973.
By Resolution of the Commonwealth Transportation Board dated April 19, 2022

PROJECT MANAGER: Rimpal Shah, P.E. (703) 259-2362 (NOVA District) _____
SURVEYED BY, DATE: H&B Surveying and Mapping, LLC (804) 330-3781, 03/09/2021
DESIGN BY: Whitman, Requardt, & Associates, LLP (804) 212-8700 _____
SUBSURFACE UTILITY BY, DATE: Accumark, Inc. (804) 550-2740, 07/07/2021

See Sheet 10 for Utility Owner's List

COMMONWEALTH OF VIRGINIA
KYLE E. KENNEDY
Lic. No. 45092
PROFESSIONAL ENGINEER

Kyle Kennedy
2022.07.15 11:54:58 -04'00'
Whitman, Requardt & Associates
Richmond, Virginia
HYDRAULICS ENGINEER

COMMONWEALTH OF VIRGINIA
MITCHELL F. JOHNSON
Lic. No. 023838
PROFESSIONAL ENGINEER

Mitchell F Johnson
2022.07.13 19:56:31 -04'00'
Whitman, Requardt & Associates
Richmond, Virginia
ROADWAY ENGINEER

REVISED	STATE	STATE ROUTE	STATE PROJECT	SHEET NO.
	VA.	95	0095-076-299,C-501	II

DESIGN FEATURES RELATING TO CONSTRUCTION OR TO REGULATION AND CONTROL OF TRAFFIC MAY BE SUBJECT TO CHANGE AS DEEMED NECESSARY BY THE DEPARTMENT

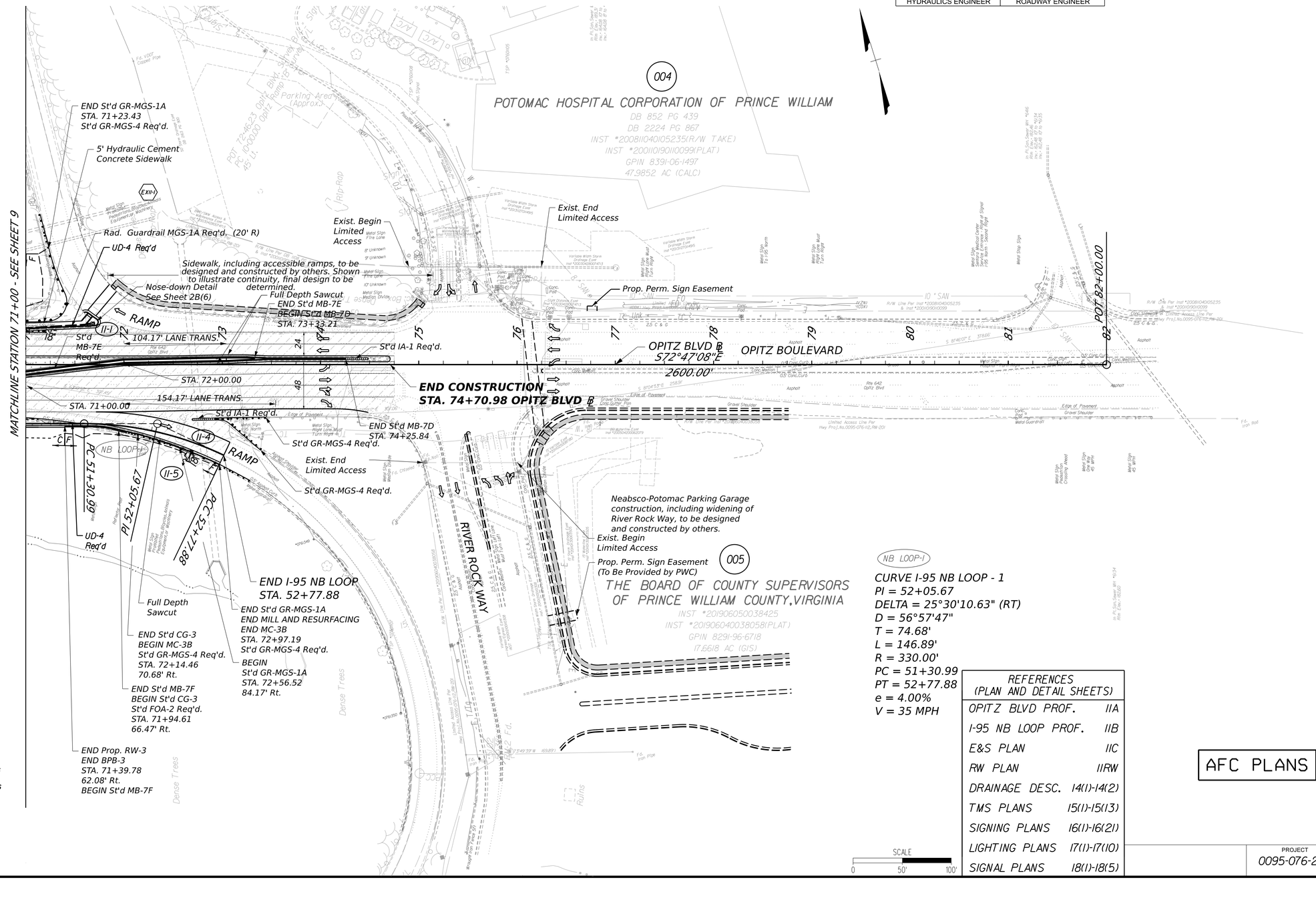

NB LOOP-1

CURVE I-95 NB LOOP - 1
PI = 52+05.67
DELTA = 25°30'10.63" (RT)
D = 56°57'47"
T = 74.68'
L = 146.89'
R = 330.00'
PC = 51+30.99
PT = 52+77.88
e = 4.00%
V = 35 MPH

LEGEND
- Direction of Proposed Travel
- Direction of Existing Travel
- C ----- Denotes Construction Limits In Cuts
- F ----- Denotes Construction Limits In Fills
- Denotes Full Depth Pavement
- Denotes Milling and Resurfacing
- Denotes Demolition of Pavement
- Denotes Shoulder Strengthening

SCALE
0 50' 100'

REFERENCES (PLAN AND DETAIL SHEETS)	
OPITZ BLVD PROF.	IIA
I-95 NB LOOP PROF.	IIB
E&S PLAN	IIC
RW PLAN	IIRW
DRAINAGE DESC.	14(1)-14(2)
TMS PLANS	15(1)-15(13)
SIGNING PLANS	16(1)-16(21)
LIGHTING PLANS	17(1)-17(10)
SIGNAL PLANS	18(1)-18(5)

AFC PLANS

PROJECT	SHEET NO.
0095-076-299	II

7/11/2022 4589300101IIa.dgn
10:29:53 AM Plotted By: jlopez-ornelas

LIMITED ACCESS HIGHWAY By Resolution of the Highway Commission dated October 4, 1956
By Resolution of the Highway Commission dated January 18, 1973
By Resolution of the Commonwealth Transportation Board dated April 19, 2022

PROJECT MANAGER Rimpal Shah, P.E. (703) 259-2362 (NOVA District)
SURVEYED BY, DATE H&B Surveying and Mapping, LLC (804) 330-3781 03/09/2021
DESIGN BY Whitman, Requardt & Associates, LLP (804) 272-8700
SUBSURFACE UTILITIES BY, DATE Accumark, Inc. (804) 550-7740 07/07/2021

OPITZ BLVD PROFILE

WB/EB S.E. = -2.00%

MATCH EXISTING GRADE

+25.00

OPITZ BLVD PROFILE GRADE

END CONSTRUCTION
STA. 74+70.98
OPITZ BLVD ℄

-3.35% -2.98% -2.82% -2.80% -2.86% -3.04%

SCALE:
HOR. 1" = 25'
VERT. 1" = 5'

0' 25' 5'

71+00	72+00	73+00	74+00	75+00	76+00	77+00	78+00	79+00	80+00	81+00
210.85	210.56	210.35	209.74	209.62	208.91	208.63	208.07	207.69	207.23	206.46
206.46	205.75	205.75	204.97	204.97	204.25	204.25	203.56	203.56	202.87	202.87
202.16	202.16	201.45	201.45	200.73	200.73	199.95	199.95	199.21	199.21	198.42
197.69	196.92	196.23	195.58	194.77	194.03	193.33	192.67	192.03	191.28	190.56
189.82	189.17	188.50	187.75	187.13	187.45	187.65	186.96	186.78	186.38	186.01
185.87	185.87	184.85	184.46	183.96	183.19					

Kyle E. Kennedy
Lic. No. 45092
Commonwealth of Virginia
Professional Engineer

Kyle Kennedy
2022.07.15 12:09:32 -04'00'

Whitman, Requardt & Associates
Richmond, Virginia
HYDRAULICS ENGINEER

Mitchell F. Johnson
Lic. No. 023838
Commonwealth of Virginia
Professional Engineer

Mitchell F Johnson
2022.07.13 19:56:47 -04'00'

Whitman, Requardt & Associates
Richmond, Virginia
ROADWAY ENGINEER

REVISED	STATE	STATE ROUTE	STATE PROJECT	SHEET NO.
	VA.	95	0095-076-299, C-501	IIA

DESIGN FEATURES RELATING TO CONSTRUCTION OR TO REGULATION AND CONTROL OF TRAFFIC MAY BE SUBJECT TO CHANGE AS DEEMED NECESSARY BY THE DEPARTMENT

AFC PLANS

PROJECT	SHEET NO.
0095-076-299	IIA

Civil Revised 12/11/12

7/11/2022 4589300101lib.dgn

10:30:04 AM Plotted By: jlopez-ornelas

LIMITED ACCESS HIGHWAY By Resolution of the Highway Commission dated October 4, 1956
By Resolution of the Highway Commission dated January 18, 1973
By Resolution of the Commonwealth Transportation Board dated April 19, 2022

PROJECT MANAGER Rimpal Shah, P.E. (703) 259-2362 (NOVA District)
SURVEYED BY, DATE H&B Surveying and Mapping, LLC (804) 330-3781, 03/09/2021
DESIGN BY Whitman, Requardt & Associates, LLP (804) 272-8700
SUBSURFACE UTILITY BY, DATE Accumark, Inc. (804) 550-7740, 07/07/2021

I-95 NB LOOP PROFILE

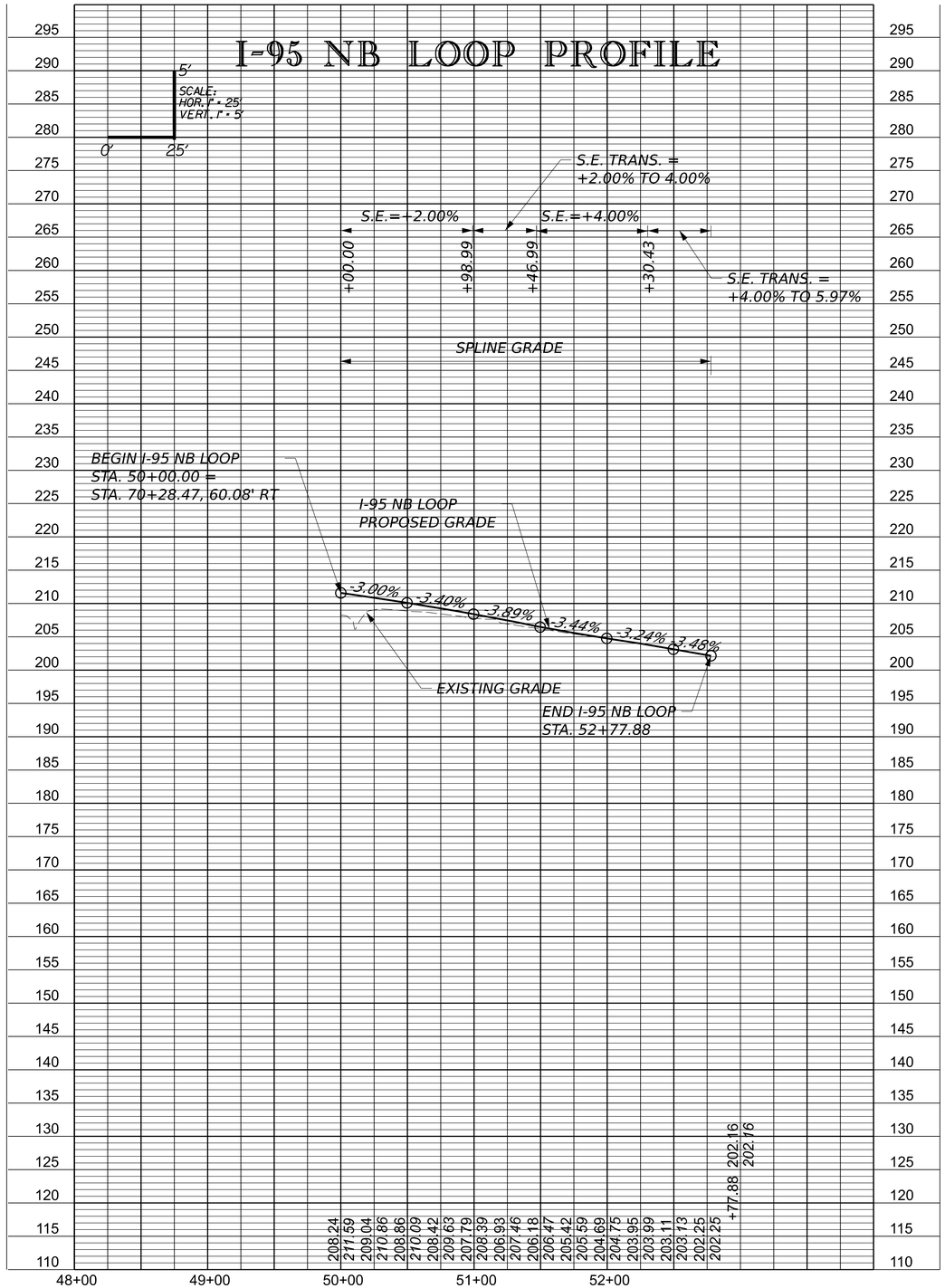

Kyle Kennedy 2022.07.15 12:11:29 -04'00' Whitman, Requardt & Associates Richmond, Virginia HYDRAULICS ENGINEER	Mitchell F Johnson 2022.07.13 19:57:13 -04'00' Whitman, Requardt & Associates Richmond, Virginia ROADWAY ENGINEER

COMMONWEALTH OF VIRGINIA — KYLE E. KENNEDY — Lic. No. 45092 — PROFESSIONAL ENGINEER

COMMONWEALTH OF VIRGINIA — MITCHELL F. JOHNSON — Lic. No. 023038 — PROFESSIONAL ENGINEER

REVISED	STATE	STATE ROUTE	STATE PROJECT	SHEET NO.
	VA.	95	0095-076-299, C-501	IIB

DESIGN FEATURES RELATING TO CONSTRUCTION OR TO REGULATION AND CONTROL OF TRAFFIC MAY BE SUBJECT TO CHANGE AS DEEMED NECESSARY BY THE DEPARTMENT

AFC PLANS

	PROJECT	SHEET NO.
	0095-076-299	IIB

Cell Revised 12/11/12

7/11/2022 4589300101Ic.DGN
9:34:35 AM Plotted By: jlopez-ornelas

LIMITED ACCESS HIGHWAY By Resolution of the Highway Commission dated October 4, 1956.
By Resolution of the Highway Commission dated January 18, 1973.
By Resolution of the Commonwealth Transportation Board dated April 19, 2022

PROJECT MANAGER Rimpal Shah, P.E. (703) 259-2362 (NOVA District) _____
SURVEYED BY, DATE H&B Surveying and Mapping, LLC (804) 330-3781, 03/09/2021
DESIGN BY Whitman, Requardt, & Associates, LLP (804) 212-8700 _____
SUBSURFACE UTILITY BY, DATE Accumark, Inc. (804) 550-1740, 07/07/2021

EROSION AND SEDIMENT CONTROL PLAN
PHASE 1

COMMONWEALTH OF VIRGINIA
KYLE E. KENNEDY
Lic. No. 45092
PROFESSIONAL ENGINEER

Kyle Kennedy
2022.07.15 11:56:27 -04'00'
Whitman, Requardt & Associates
Richmond, Virginia
HYDRAULICS ENGINEER

COMMONWEALTH OF VIRGINIA
MITCHELL F. JOHNSON
Lic. No. 023838
PROFESSIONAL ENGINEER

Mitchell F Johnson
2022.07.13 19:57:35 -04'00'
Whitman, Requardt & Associates
Richmond, Virginia
ROADWAY ENGINEER

REVISED	STATE	STATE ROUTE	STATE PROJECT	SHEET NO.
	VA.	95	0095-076-299,C-501	IIC

DESIGN FEATURES RELATING TO CONSTRUCTION OR TO REGULATION AND CONTROL OF TRAFFIC MAY BE SUBJECT TO CHANGE AS DEEMED NECESSARY BY THE DEPARTMENT

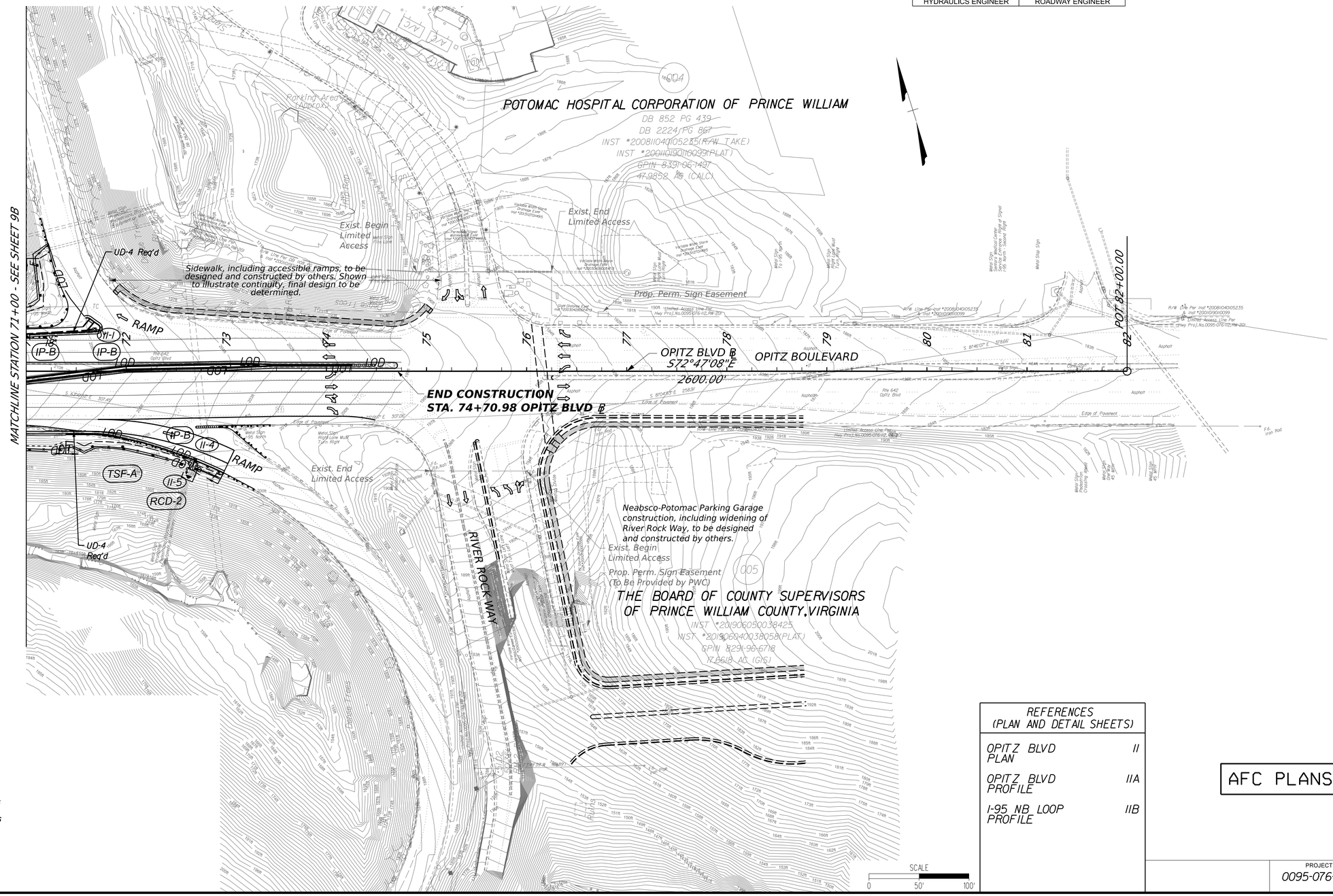

LEGEND
- Direction of Proposed Travel
- Direction of Existing Travel
- C _____ Denotes Construction Limits In Cuts
- F _ _ _ Denotes Construction Limits In Fills

SCALE 0 50' 100'

REFERENCES (PLAN AND DETAIL SHEETS)	
OPITZ BLVD PLAN	II
OPITZ BLVD PROFILE	IIA
I-95 NB LOOP PROFILE	IIB

AFC PLANS

PROJECT	SHEET NO.
0095-076-299	IIC

Cell Revised 12/11/12

7/8/2022 4589300101lrw.DGN
4:28:48 PM Plotted By: rbrown

LIMITED ACCESS HIGHWAY

By Resolution of the Highway Commission dated October 4, 1956.
By Resolution of the Highway Commission dated January 18, 1973.
By Resolution of the Commonwealth Transportation Board dated April 19, 2022

PROJECT MANAGER Bimpal Shah, P.E. (703) 259-2362 (NOVA District)
SURVEYED BY, DATE H&B Surveying and Mapping, LLC. (804) 330-3781, 03/09/2021
DESIGN BY Whitman, Requardt & Associates, LLP. (804) 212-8700
SUBSURFACE UTILITY BY, DATE Accumark, Inc. (804) 550-7740, 01/07/2021

COMMONWEALTH OF VIRGINIA
LESLIE R. BYRNSIDE
Lic. No. 002362
LAND SURVEYOR

Leslie R Byrnside
2022.07.08 16:57:15-04'00'

H&B Surveying and Mapping
Richmond, Virginia
LAND SURVEYOR

REVISED	STATE	STATE ROUTE	STATE PROJECT	SHEET NO.
	VA.	95	0095-076-299,C-501	IIRW

DESIGN FEATURES RELATING TO CONSTRUCTION OR TO REGULATION AND CONTROL OF TRAFFIC MAY BE SUBJECT TO CHANGE AS DEEMED NECESSARY BY THE DEPARTMENT

Area Table

Parcel	Proposed Permanent Sign Easement (Ac. or SF)
004	50 SF

Based on VDOT 0095-076-299,C-501 Project

004

POTOMAC HOSPITAL CORPORATION OF PRINCE WILLIAM
DB 852 PG 439
DB 2224 PG 867
INST #200811040105235(R/W TAKE)
INST #200111019011099(PLAT)
GPIN 8391-06-1497
47.9852 AC (CALC)

Fd. VDOT Capped Pipe
50' Storm Drainage Esmt DB 2924 PG 1900
BMP/SWM Access & Maintenance Esmt Inst #200304280074713
R/W Line Per DB 1108 PG 600 & Inst #200111019011099(Plat) Limited Access Line Per Hwy Proj.No.0095-076-112,RW-201
Exist. Begin Limited Access
Variable Width Storm Drainage Esmt Inst #200304280074713
Variable Width Storm Drainage Esmt Inst #201312701114915
Exist. End Limited Access
59.64' 59.64' 54.64' 54.64' -71.41' -81.41'
Variable Width Storm Drainage Esmt Inst #200304280074713
Variable Width Storm Drainage Esmt Inst #201312701114915
45.00'
46.53'
Sight Distance Esmt Inst #200304280074713
Prop. Perm. Sign Easement
Limited Access Line Per Hwy Proj.No.0095-076-112,RW-201
R/W Line Per Inst #200811040105235 & Inst #200111019011099
Limited Access Line Per Hwy Proj.No.0095-076-112,RW-201
R/W Line Per Inst #200811040105235 & Inst #200111019011099 Limited Access Line Per Hwy Proj.No.0095-076-112,RW-201

Opitz Blvd Construction Baseline

71 72 73 74 75 76 77 78 79 80 81 82

POT 82+00.00

S72°47'08"E
2600.00'

Rte 642 - Opitz Blvd

N- 355,245.818
E- 3,627,050.669

N- 354,949.869
E- 3,628,005.872

Fd. Iron Rod
20' Waterline Esmt Inst #200504200062079
R/W Line Per Inst #20190604003805 8
Limited Access Line Per Hwy Proj.No.0095-076-112,RW-201
Fd. Iron Rod

Exist. End Limited Access
Fd. P.K.Nail
Fd. Iron Rod
Fd. Chiseled 'X'
15' Vertizon Esmt Inst #20010625000080
Traffic Signal Esmt Inst #20012100110308
Variable Width Storm Drainage Esmt Inst #20010130003505
15' Storm Drainage Esmt Inst #20010130003505
75' Waterline Esmt Inst #20010130003505
Exist. Begin Limited Access
Prop. Perm. Sign Easement (To Be Provided by PWC)
Limited Access Line Per Hwy Proj.No.0095-076-112,RW-201 Inst #20190604003805 8
Variable Width Storm Drainage Esmt Inst #20012100110308
(N 73°49'39" W 169.89')
Fd. Iron Pipe
Fd. Iron Pipe

THE BOARD OF COUNTY SUPERVISORS OF PRINCE WILLIAM COUNTY, VIRGINIA
INST #201906050038425
INST #201906040038058(PLAT)
GPIN 8291-96-6718
17.6618 AC (GIS)

Notes:

1. This Right-of-Way Sheet Is Based Upon a Field Run Perimeter Survey of the Existing and Proposed R/W Limits. All Other Adjoining/Departing Boundary Lines Shown are Compiled From Various Sources: Found Field Monumentation, Metes and Bounds Description and Recorded Plats. The Adjoining Lines Do Not Represent a Field Run Survey of the Adjoining Properties and are a Best Fit Based on Compiled Data. All Areas Shown for R/W Takes and Easements are Approximate Only. See Right-of-Way Sheet 1C.
2. All of the Properties Physical Improvements are not Shown Hereon.
3. This Plan Sheet was Prepared Without the Benefit of a Title Report and May Not Show All Easements Which May Affect the Property Shown Hereon.
4. No Designation or Location of Subsurface Utilities were Performed During Preparation of This Plan Sheet.
5. This Survey Datum Is Based on VDOT Project #0095-076-299, C-501, UPC #116663.
6. No Cemetery Sites Were Observed / Visible on the Subject Properties.
7. I Hereby Certify That This Plan Sheet Is Correct to the Best Of My Knowledge and Belief, and This Plan Sheet Complies With The Minimum Standards and Procedures as Established By The Virginia Department Of Transportation's Location and Design Division.
8. Coordinate Values Shown Hereon Are VDOT Project Coordinates.
9. All Monumentation to be Set Within 6 Months of the Completion of Construction.

LEGEND:

[00.00' / 00.00'] - PROPOSE PERMANENT SIGN EASEMENT -·-·-

SCALE	PROJECT	SHEET NO.
0 50' 100'	0095-076-299	IIRW

Cell Revised 12/11/12

7/11/2022 4589300101I2.DGN
9:35:06 AM Plotted By: jlopez-ornelas

LIMITED ACCESS HIGHWAY

By Resolution of the Highway Commission dated October 4, 1956
By Resolution of the Highway Commission dated January 18, 1973
By Resolution of the Commonwealth Transportation Board dated April 19, 2022

PROJECT MANAGER Rimpal Shah, P.E. (703) 259-2362 (NOVA District) _____
SURVEYED BY, DATE H&B Surveying and Mapping, LLC (804) 330-3781, 03/09/2021
DESIGN BY Whitman, Requardt, & Associates, LLP (804) 212-8700 _____
SUBSURFACE UTILITY BY, DATE Accumark, Inc. (804) 550-7740, 07/07/2021

See Sheet 10 for Utility Owner's List

COMMONWEALTH OF VIRGINIA
KYLE E. KENNEDY
Lic. No. 45092
PROFESSIONAL ENGINEER

Kyle Kennedy
2022.07.15 11:59:13 -04'00'
Whitman, Requardt & Associates
Richmond, Virginia
HYDRAULICS ENGINEER

COMMONWEALTH OF VIRGINIA
MITCHELL F. JOHNSON
Lic. No. 023838
PROFESSIONAL ENGINEER

Mitchell F Johnson
2022.07.13 19:57:54 -04'00'
Whitman, Requardt & Associates
Richmond, Virginia
ROADWAY ENGINEER

REVISED	STATE	STATE ROUTE	STATE PROJECT	SHEET NO.
	VA.	95	0095-076-299,C-501	I2

DESIGN FEATURES RELATING TO CONSTRUCTION OR TO REGULATION AND CONTROL OF TRAFFIC MAY BE SUBJECT TO CHANGE AS DEEMED NECESSARY BY THE DEPARTMENT

NBL-3
CURVE I-95 NBL-3
PI = 396+28.86
DELTA = 07°55'18.96" (RT)
D = 00°15'03"
T = 1,582.53'
L = 3,160.01'
R = 22,854.94'
PC = 380+46.33
PT = 412+06.34

SBL-3
CURVE I-95 SBL-3
PI = 396+40.15
DELTA = 07°55'19.06" (RT)
D = 00°14'56"
T = 1,594.72'
L = 3,184.36'
R = 23,030.99'
PC = 380+45.43
PT = 412+29.79

XBL-3
CURVE 95 XBL-3
PI = 748+39.34
DELTA = 07°24'54.68" (RT)
D = 00°14'49"
T = 1,503.36'
L = 3,002.53'
R = 23,200.00'
PC = 733+35.98
PT = 763+38.51

XBL-3
Ls = 200.00
Θs = 00°14'49"
P = 0.07
K = 100.00
Xs = 200.00
Ys = 0.29
LT = 133.33
ST = 66.67
LC = 200.00
V= 65 MPH

END St'd GR-MGS-1
STA. 738+28.23
St'd GR-MGS-4 Req'd

CD LANES

END PROJECT 0095-076-299
C-501 STA. 739+02.45 95 XBL

END MILL AND RESURFACING
STA. 745+05.00
SBL STA. 393+09.50

I-95 SBL ℄
PI 396+40.15

95 XL ℄
PI 396+28.86

I-95 NBL ℄

MATCHLINE STATION 738+25 - SEE SHEET 9

MATCHLINE STATION 752+25 - SEE SHEET 13

REFERENCES (PLAN AND DETAIL SHEETS)	
TMS PLANS	15(1)-15(13)
SIGNING PLANS	16(1)-16(21)
LIGHTING PLANS	17(1)-17(10)

AFC PLANS

LEGEND
- Direction of Proposed Travel
- Direction of Existing Travel
- C ----- Denotes Construction Limits In Cuts
- F — — — Denotes Construction Limits In Fills
- Denotes Full Depth Pavement
- Denotes Milling and Resurfacing
- Denotes Demolition of Pavement

SCALE 0 50' 100'

PROJECT	SHEET NO.
0095-076-299	I2

Call Revised 12/11/12

7/11/2022 4589300101 3.DGN
9:35:31 AM Plotted By: Jlopez-ornelas

LIMITED ACCESS HIGHWAY

By Resolution of the Highway Commission dated October 4, 1956.
By Resolution of the Highway Commission dated January 18, 1973.
By Resolution of the Commonwealth Transportation Board dated April 19, 2022

PROJECT MANAGER Rimpal Shah, P.E. (703) 259-2362 (NOVA District) _____
SURVEYED BY, DATE H&B Surveying and Mapping, LLC (804) 330-3781, 03/09/2021
DESIGN BY Whitman, Requardt, & Associates, LLP (804) 212-8700 _____
SUBSURFACE UTILITY BY, DATE Accumark, Inc. (804) 550-7740, 07/07/2021

See Sheet 10 for Utility Owner's List

KYLE E. KENNEDY
Lic. No. 45092
COMMONWEALTH OF VIRGINIA
PROFESSIONAL ENGINEER

Kyle Kennedy
2022.07.15 11:59:32 -04'00'

Whitman, Requardt & Associates
Richmond, Virginia
HYDRAULICS ENGINEER

MITCHELL F. JOHNSON
Lic. No. 023838
COMMONWEALTH OF VIRGINIA
PROFESSIONAL ENGINEER

Mitchell F Johnson
2022.07.13 19:58:11 -04'00'

Whitman, Requardt & Associates
Richmond, Virginia
ROADWAY ENGINEER

REVISED	STATE	STATE ROUTE	STATE PROJECT	SHEET NO.
	VA.	95	0095-076-299,C-501	13

DESIGN FEATURES RELATING TO CONSTRUCTION OR TO REGULATION AND CONTROL OF TRAFFIC MAY BE SUBJECT TO CHANGE AS DEEMED NECESSARY BY THE DEPARTMENT

NBL-3
CURVE I-95 NBL-3
PI = 396+28.86
DELTA = 07°55'18.96" (RT)
D = 00°15'03"
T = 1,582.53'
L = 3,160.01'
R = 22,854.94'
PC = 380+46.33
PT = 412+06.34

SBL-3
CURVE I-95 SBL-3
PI = 396+40.15
DELTA = 07°55'19.06" (RT)
D = 00°14'56"
T = 1,594.72'
L = 3,184.36'
R = 23,030.99'
PC = 380+45.43
PT = 412+29.79

XBL-3
CURVE 95 XBL-3
PI = 748+39.34
DELTA = 07°24'54.68" (RT)
D = 00°14'49"
T = 1,503.36'
L = 3,002.53'
R = 23,200.00'
PC = 733+35.98
PT = 763+38.51

XBL-3
Ls = 200.00
Θs = 00°14'49"
P = 0.07
K = 100.00
Xs = 200.00
Ys = 0.29
LT = 133.33
ST = 66.67
LC = 200.00
V= 65 MPH

MATCHLINE STATION 752+25 - SEE SHEET 12

I-95 SBL
I-95 SBL ℄
SBL-3
I-95 NBL
I-95 NBL ℄
NBL-3
95 XBL
95 XL ℄
XBL-3
CD LANES
FLYOVER RAMP
N 35°09'34" E
Flyover Ramp "A" Survey B/L
Rte # 95 SBL Survey B/L
Rte # 95 NBL Survey B/L
Rte # 95 HOV Survey B/L
Exist. R/W & L/A Line
Exist. L/A Line
R=23118.31' Δ=04°00'
PT 412+29.79
PT 412+06.34
CS 763+38.51
N22°47'38"E 6653.81'
N22°47'43"E 1527.52'
N22°47'38"E 6769.56'
Parking
Dense Trees
Brush
Metal Guardrail
Asphalt Shoulder
Asphalt
Mile Marker
Rip-Rap
Conc. Ditch
Conc. Bridge Support
Elec. Box
Light Pole
Sign
Gate
Tele. MH
Conc. Box
Inlet
Comp
VDH Mon. Fd.
RM-2 Fd.
I-95 - SBL
I-95 - NBL
I-95 - Reversible HOV Lanes

LEGEND
- Direction of Proposed Travel
- Direction of Existing Travel
- C _____ Denotes Construction Limits In Cuts
- F _ _ _ Denotes Construction Limits In Fills
- Denotes Full Depth Pavement
- Denotes Milling and Resurfacing
- Denotes Demolition of Pavement

SCALE 0 50' 100'

REFERENCES (PLAN AND DETAIL SHEETS)

TMS PLANS	15(1)-15(13)
SIGNING PLANS	16(1)-16(21)
LIGHTING PLANS	17(1)-17(10)

AFC PLANS

PROJECT	SHEET NO.
0095-076-299	13

Cell Revised 12/11/12

LIMITED ACCESS HIGHWAY By Resolution of the Highway Commission dated October 4, 1956.
By Resolution of the Highway Commission dated January 18, 1973.
By Resolution of the Commonwealth Transportation Board dated April 19, 2022

PROJECT MANAGER Rimpal Shah, P.E. (703) 259-2362 (NOVA District) _____
SURVEYED BY, DATE H&B Surveying and Mapping, LLC (804) 330-3781, 03/09/2021
DESIGN BY Whitman, Requardt, & Associates, LLP (804) 212-8700 _____
SUBSURFACE UTILITY BY, DATE Accumark, Inc. (804) 550-2740, 07/07/2021

COMMONWEALTH OF VIRGINIA
KYLE E. KENNEDY
Lic. No. 45092
PROFESSIONAL ENGINEER
Kyle Kennedy
2022.07.15 12:00:00 -04'00'
Whitman, Requardt & Associates
Richmond, Virginia
HYDRAULICS ENGINEER

REVISED	STATE	STATE ROUTE	STATE PROJECT	SHEET NO.
	VA.	95	0095-076-299,C-501	14(1)

DESIGN FEATURES RELATING TO CONSTRUCTION OR TO REGULATION AND CONTROL OF TRAFFIC MAY BE SUBJECT TO CHANGE AS DEEMED NECESSARY BY THE DEPARTMENT

DRAINAGE DESCRIPTIONS

SHEET 3

NO PROPOSED STRUCTURES

SHEET 4

4-1
I ST'D DI-5 REQ'D
Std.PG-2A Type E Cover
H = 4.4' INV.128.90
ST'D ST-1 REQ'D;
CONNECT UD-4 TO STRUCTURE

4-1 TO 4-2
147 L.F.-18" STORM SEWER PIPE REQ'D (3' COVER)
INV.(IN) 128.90 INV.(OUT) 126.40
SILT-TIGHT JOINT TYPE

4-2
I ST'D DI-5 REQ'D
Std.PG-2A Type E Cover
H = 3.3' INV.126.30
CONNECT UD-4 TO STRUCTURE

4-2 TO 4-3
123 L.F.-18" STORM SEWER PIPE REQ'D (1' COVER)
INV.(IN) 126.30 INV.(OUT) 124.79
SILT-TIGHT JOINT TYPE
LESS THAN MIN COVER

4-3
I ST'D ES-1 OR 2 (18") REQ'D
INV.(OUT) 124.79
3 TONS STD.EC-1 CLASS AI TYPE A INSTALLATION

4-4
I ST'D DI-5 REQ'D
Std.PG-2A Type E Cover
H = 4.3' INV.106.95
ST'D ST-1 REQ'D;

4-4 TO 4-5
148 L.F.-24" STORM SEWER PIPE REQ'D (4' COVER)
INV.(IN) 106.95 INV.(OUT) 106.00
SILT-TIGHT JOINT TYPE

4-5
I ST'D ES-1 OR 2 (24") REQ'D
INV.(OUT) 106.00
20 TONS STD.EC-1 CLASS AI TYPE A INSTALLATION

SHEET 5

5-1a
I ST'D DI-10K (TYPE III) (L=10') REQ'D
H = 5.3' INV.161.80
ST'D ST-1 REQ'D;
CONNECT UD-4 TO STRUCTURE

5-1a TO 5-1b
11 L.F.-18" STORM SEWER PIPE REQ'D (4' COVER)
INV.(IN) 161.80 INV.(OUT) 160.70
SILT-TIGHT JOINT TYPE

5-1b
I ST'D DI-10K (TYPE III) (L=14') REQ'D
H = 4.3' INV.160.60
ST'D IS-1 REQ'D; ST'D ST-1 REQ'D;
CONNECT UD-4 TO STRUCTURE

5-1b TO 5-2b
227 L.F.-18" STORM SEWER PIPE REQ'D (3' COVER)
INV.(IN) 160.60 INV.(OUT) 156.90
SILT-TIGHT JOINT TYPE

5-2a
I ST'D DI-10K (TYPE III) (L=10') REQ'D
H = 6.6' INV.157.70
ST'D ST-1 REQ'D;
CONNECT UD-4 TO STRUCTURE

5-2a TO 5-2b
8 L.F.-18" STORM SEWER PIPE REQ'D (5' COVER)
INV.(IN) 157.70 INV.(OUT) 156.90
SILT-TIGHT JOINT TYPE

5-2b
I ST'D DI-10K (TYPE III) (L=14') REQ'D
H = 4.8' INV.156.40
ST'D IS-1 REQ'D; ST'D ST-1 REQ'D;
CONNECT UD-4 TO STRUCTURE

5-2b TO 5-2c
44 L.F.-24" STORM SEWER PIPE REQ'D (3' COVER)
INV.(IN) 156.40 INV.(OUT) 155.60
SILT-TIGHT JOINT TYPE

5-2c
I ST'D DI-10K (TYPE III) (L=4') REQ'D
H = 4.9' INV.155.50
ST'D IS-1 REQ'D; ST'D ST-1 REQ'D;
CONNECT UD-4 TO STRUCTURE

5-2c TO 5-3
128 L.F.-24" STORM SEWER PIPE REQ'D (3' COVER)
INV.(IN) 155.50 INV.(OUT) 153.10
SILT-TIGHT JOINT TYPE

5-3
I ST'D DI-10K (TYPE III) (L=10') REQ'D
H = 4.9' INV.153.00
ST'D ST-1 REQ'D;
CONNECT UD-4 TO STRUCTURE

5-3 TO 5-4
313 L.F.-24" STORM SEWER PIPE REQ'D (5' COVER)
INV.(IN) 153.00 INV.(OUT) 150.00
SILT-TIGHT JOINT TYPE

5-4
I ST'D DI-10K (TYPE II) (L=16') REQ'D
H = 6.8' INV.148.00
ST'D IS-1 REQ'D; ST'D ST-1 REQ'D;
CONNECT UD-4 TO STRUCTURE

5-4 TO 5-6
25 L.F.-24" STORM SEWER PIPE REQ'D (6' COVER)
INV.(IN) 148.00 INV.(OUT) 147.60
SILT-TIGHT JOINT TYPE

5-5
I ST'D DI-10K (TYPE III) (L=8') REQ'D
H = 4.6' INV.146.00
ST'D ST-1 REQ'D;
CONNECT UD-4 TO STRUCTURE

5-5 TO 5-6
7 L.F.-18" STORM SEWER PIPE REQ'D (6' COVER)
INV.(IN) 146.00 INV.(OUT) 145.90
SILT-TIGHT JOINT TYPE

5-6
I ST'D DI-10K (TYPE III) (L=12') REQ'D
H = 8.2' INV.145.40
ST'D IS-1 REQ'D; ST'D ST-1 REQ'D;
CONNECT UD-4 TO STRUCTURE

5-6 TO 5-7
176 L.F.-24" STORM SEWER PIPE REQ'D (8' COVER)
INV.(IN) 145.40 INV.(OUT) 143.00
SILT-TIGHT JOINT TYPE

5-7
I ST'D DI-10K (TYPE III) (L=12') REQ'D
H = 9.9' INV.140.85
ST'D IS-1 REQ'D; ST'D ST-1 REQ'D;
CONNECT TWO EXISTING 24" PIPES TO STRUCTURE
CONNECT UD-4 TO STRUCTURE

5-8
I ST'D DI-10K (TYPE III) (L=16') REQ'D
H = 4.5' INV.136.10
ST'D ST-1 REQ'D;
CONNECT UD-4 TO STRUCTURE

5-8 TO 5-9
4 L.F.-18" STORM SEWER PIPE REQ'D (3' COVER)
INV.(IN) 136.10 INV.(OUT) 135.90
SILT-TIGHT JOINT TYPE

5-9
3.7 FT.ST'D MH-1 OR MH-2 REQ'D
ST'D MH-1 FRAME AND COVER REQ'D
INV.135.80
ST'D IS-1 REQ'D;. ST'D ST-1 REQ'D;

5-9 TO 5-11
92 L.F.-18" STORM SEWER PIPE REQ'D (3' COVER)
INV.(IN) 135.80 INV.(OUT) 133.40
SILT-TIGHT JOINT TYPE

5-10
I ST'D DI-10K (TYPE III) (L=14') REQ'D
H = 7.1' INV.135.25
ST'D ST-1 REQ'D;
CONNECT UD-4 TO STRUCTURE

5-10 TO 5-11
19 L.F.-18" STORM SEWER PIPE REQ'D (6' COVER)
INV.(IN) 135.25 INV.(OUT) 133.40
SILT-TIGHT JOINT TYPE

5-11
I ST'D DI-5 REQ'D
Std.PG-2A Type E Cover
H = 4.4' INV.133.30
ST'D IS-1 REQ'D; ST'D ST-1 REQ'D;

5-11 TO 4-1
153 L.F.-18" STORM SEWER PIPE REQ'D (3' COVER)
INV.(IN) 133.30 INV.(OUT) 129.00
SILT-TIGHT JOINT TYPE

SHEET 6

6-1a
I ST'D DI-7 REQ'D GRATE A,TYPE I;
H = 4.3' INV.163.30
ST'D ST-1 REQ'D;

6-1a TO 6-1b
8 L.F.-18" STORM SEWER PIPE REQ'D (3' COVER)
INV.(IN) 163.30 INV.(OUT) 163.20
SILT-TIGHT JOINT TYPE

6-1b
I ST'D DI-10K (TYPE III) (L=4') REQ'D
H = 4.9' INV.163.10
ST'D IS-1 REQ'D; ST'D ST-1 REQ'D;
CONNECT UD-4 TO STRUCTURE

6-1b TO 5-1b
250 L.F.-18" STORM SEWER PIPE REQ'D (3' COVER)
INV.(IN) 163.10 INV.(OUT) 160.70
SILT-TIGHT JOINT TYPE

6-2
I ST'D DI-5 REQ'D
Std.PG-2A Type E Cover
H = 6.7' INV.163.13
ST'D ST-1 REQ'D;
CONNECT EXISTING 24" PIPE TO STRUCTURE

6-2 TO 6-3
8 L.F.-24" STORM SEWER PIPE REQ'D (6' COVER)
INV.(IN) 163.13 INV.(OUT) 162.89
SILT-TIGHT JOINT TYPE

6-3
8.3 FT.ST'D MH-1 OR MH-2 REQ'D
ST'D MH-1 FRAME AND COVER REQ'D
INV.162.79
, ST'D ST-1 REQ'D;
CONNECT EXISTING 24" PIPE TO STRUCTURE
CONNECT UD-4 TO STRUCTURE

6-4
I ST'D DI-5 REQ'D
Std.PG-2A Type E Cover
H = 19.5' INV.155.98
ST'D IS-1 REQ'D; I ST'D SL-1 REQ'D; ST'D ST-1 REQ'D;

SHEET 7

NO PROPOSED STRUCTURES

SHEET 8

8-1
I ST'D DI-10K (TYPE III) (L=4') REQ'D
H = 5.1' INV.175.38
ST'D ST-1 REQ'D;
CONNECT UD-4 TO STRUCTURE
CONNECT TWO EXISTING 18" PIPES TO STRUCTURE

AFC PLANS

	PROJECT	SHEET NO.
	0095-076-299	14(1)

LIMITED ACCESS HIGHWAY By Resolution of the Highway Commission dated October 4, 1956.
By Resolution of the Highway Commission dated January 18, 1973.
By Resolution of the Commonwealth Transportation Board dated April 19, 2022

PROJECT MANAGER Rimpal Shah, P.E. (703) 259-2362 (NOVA District) _____
SURVEYED BY, DATE H&B Surveying and Mapping, LLC (804) 330-3781, 03/09/2021
DESIGN BY Whitman, Requardt, & Associates, LLP (804) 212-8700 _____
SUBSURFACE UTILITY BY, DATE Accumark, Inc. (804) 550-7740, 07/07/2021

DRAINAGE DESCRIPTIONS

8-2A	I ST'D DI-10K (TYPE III) (L=8') REQ'D H = 5.5' INV.176.51 ST'D ST-1 REQ'D; CONNECT UD-4 TO STRUCTURE
8-2A TO 8-2B	1 L.F.-18" STORM SEWER PIPE REQ'D (4' COVER) INV.(IN) 176.51 INV.(OUT) 176.50 SILT-TIGHT JOINT TYPE
8-2B	I ST'D DI-10K (TYPE III) (L=16') REQ'D H = 5.0' INV.176.00 ST'D IS-1 REQ'D; ST'D ST-1 REQ'D; CONNECT UD-4 TO STRUCTURE CONNECT EXISTING PIPE TO STRUCTURE
8-3	I ST'D DI-10K (TYPE III) (L=10') REQ'D H = 4.2' INV.178.20 ST'D ST-1 REQ'D; CONNECT UD-4 TO STRUCTURE
8-3 TO 8-2B	29 L.F.-18" STORM SEWER PIPE REQ'D (4' COVER) INV.(IN) 178.20 INV.(OUT) 178.00 SILT-TIGHT JOINT TYPE
SHEET 9	
9-1a	I ST'D PRECAST T-DI-10K (TYPE III) (L=14') REQ'D ON 48" BASE H = 18.4' INV.169.20 ST'D IS-1 REQ'D; I ST'D SL-1 REQ'D; ST'D ST-1 REQ'D; CONNECT UD-4 TO STRUCTURE CONNECT EXISTING 48" PIPE TO STRUCTURE
9-1a TO 9-1b	50 L.F.-48" STORM SEWER PIPE REQ'D (14' COVER) INV.(IN) 169.20 INV.(OUT) 168.25 SILT-TIGHT JOINT TYPE Excavate 18" below bottom of pipe and backfill with 12" of No.57 stone wrapped in separation fabric Cover wrapped stone with minimum of 6" crusher run or 6" of bedding material 293 CY MINOR STRUCTURE EXCAVATION DEWATERING BASIN REQ'D.
9-1b	I ST'D PRECAST T-DI-10K (TYPE III) (L=16') REQ'D ON 48" BASE H = 16.2' INV.168.15 ST'D IS-1 REQ'D; I ST'D SL-1 REQ'D; ST'D ST-1 REQ'D; CONNECT UD-4 TO STRUCTURE CONNECT EXISTING 48" PIPE TO STRUCTURE
9-2	I ST'D DI-10K (TYPE III) (L=18') REQ'D H = 4.3' INV.192.20 ST'D ST-1 REQ'D;
9-2 TO 9-3	30 L.F.-18" STORM SEWER PIPE REQ'D (3' COVER) INV.(IN) 192.20 INV.(OUT) 192.00 SILT-TIGHT JOINT TYPE
9-3	I ST'D DI-10K (TYPE III) (L=16') REQ'D H = 4.7' INV.191.90 ST'D IS-1 REQ'D; ST'D ST-1 REQ'D; CONNECT UD-4 TO STRUCTURE
9-3 TO 8-2B	326 L.F.-18" STORM SEWER PIPE REQ'D (4' COVER) INV.(IN) 191.90 INV.(OUT) 178.00 SILT-TIGHT JOINT TYPE
9-4	I ST'D DI-5 REQ'D Std.PG-2A Type E Cover H = 4.0' INV.184.30 ST'D ST-1 REQ'D; BACK-UP BERM REQ'D
9-4 TO 9-5	151 L.F.-18" STORM SEWER PIPE REQ'D (4' COVER) INV.(IN) 184.30 INV.(OUT) 183.50 SILT-TIGHT JOINT TYPE
9-5	MODIFY EXISTING DROP INLET Add DI-5; Std.PG-2A Type E Cover ADJUST TO GRADE (RAISE 0.5'); MODIFY TO ACCEPT 18" PIPE PROPOSED TOP ELEV = INV 187.85
9-6	I ST'D PRECAST T-DI-2BB (L=8') REQ'D ON 60" BASE H = 10.9' INV.204.05 ST'D IS-1 REQ'D; ST'D ST-1 REQ'D; PIPE OFFSET FROM CENTER AT INLETS TO PROVIDE SEPARATION BETWEEN PIPE AND GUARDRAIL POSTS CONNECT UD-4 TO STRUCTURE
9-6 TO 9-7	10 L.F.-18" STORM SEWER PIPE REQ'D (11' COVER) INV.(IN) 204.05 INV.(OUT) 204.00 SILT-TIGHT JOINT TYPE
9-7	I ST'D 18" EW-1 (PRECAST) REQ'D INV.(OUT) 204.00
9-8A	I ST'D DI-10K (TYPE III) (L=16') REQ'D H = 4.1' INV.179.24 ST'D ST-1 REQ'D;
9-8A TO 9-8B	4 L.F.-15" STORM SEWER PIPE REQ'D (4' COVER) INV.(IN) 179.24 INV.(OUT) 179.20 SILT-TIGHT JOINT TYPE
9-8B	I ST'D DI-10K (TYPE III) (L=16') REQ'D H = 3.9' INV.179.10
9-9	8.7' STD.SWM-1 REQ'D BOTTOM ELEV = 171.25' 3" DIA.LOW FLOW ORIFICE REQ'D.INV.= 175.25 ST'D.SWM-DR DEBRIS RACK REQ'D. ST'D.SWM-DR TRASH RACK REQ'D.
9-9 TO 9-10	15 L.F.-24" CONC.PIPE REQ'D (1' COVER) INV.(IN) 175.25 INV.(OUT) 175.20 WITH RUBBER GASKETS AND CONC.CRADLE SILT-TIGHT JOINT TYPE STD.SWM-DR CONCRETE CRADLE REQ'D
9-10	5.1 FT.ST'D MH-1 OR MH-2 REQ'D ST'D MH-1 FRAME AND COVER REQ'D INV.175.20 CONNECT EXISTING 27" PIPE TO STRUCTURE
9-11	I ST'D DI-3B (L=12') REQ'D H = 7.3' INV.203.70 ST'D IS-1 REQ'D; ST'D ST-1 REQ'D;
9-11 TO 9-12	11 L.F.-18" STORM SEWER PIPE REQ'D (11' COVER) INV.(IN) 203.70 INV.(OUT) 203.60 SILT-TIGHT JOINT TYPE
9-12	15.0 FT.ST'D MH-1 OR MH-2 REQ'D ST'D MH-1 FRAME AND COVER REQ'D INV.177.00 .1 ST'D SL-1 REQ'D; ST'D ST-1 REQ'D;
9-12 TO 9-13	29 L.F.-18" STORM SEWER PIPE REQ'D (0' COVER) INV.(IN) 177.00 INV.(OUT) 176.00 SILT-TIGHT JOINT TYPE
9-13	I ST'D ES-1 OR 2 (18") REQ'D INV.(OUT) 176.00 3 TONS STD.EC-1 CLASS I TYPE A INSTALLATION
9-14 TO 9-12	47 L.F.-18" STORM SEWER PIPE REQ'D (0' COVER) INV.(IN) 192.50 INV.(OUT) 189.50 SILT-TIGHT JOINT TYPE
9-14	I ST'D DI-3BB (L=6') REQ'D H = 18.6' INV.192.50 ST'D IS-1 REQ'D; I ST'D SL-1 REQ'D; ST'D ST-1 REQ'D;
SHEET 10	
10-1	I ST'D DI-3BB (L=10') REQ'D H = 8.2' INV.202.77 ST'D ST-1 REQ'D; CONNECT UD-4 TO STRUCTURE CONNECT EXISTING 24" PIPE TO STRUCTURE
10-2	NOT USED
10-3	NOT USED
10-4	I ST'D PRECAST T-DI-2B (L=12') REQ'D ON 60" BASE H = 4.0' INV.206.60 ST'D ST-1 REQ'D; PIPE OFFSET FROM CENTER AT INLETS TO PROVIDE SEPARATION BETWEEN PIPE AND GUARDRAIL POSTS CONNECT UD-4 TO STRUCTURE
10-4 TO 10-5	190 L.F.-18" STORM SEWER PIPE REQ'D (7' COVER) INV.(IN) 206.60 INV.(OUT) 205.60 SILT-TIGHT JOINT TYPE OFFSET CONNECTION AT INLETS
10-5	I ST'D PRECAST T-DI-2B (L=6') REQ'D ON 60" BASE H = 8.3' INV.205.50 ST'D IS-1 REQ'D; ST'D ST-1 REQ'D; PIPE OFFSET FROM CENTER AT INLETS TO PROVIDE SEPARATION BETWEEN PIPE AND GUARDRAIL POSTS CONNECT UD-4 TO STRUCTURE
10-5 TO 9-6	102 L.F.-18" STORM SEWER PIPE REQ'D (9' COVER) INV.(IN) 205.50 INV.(OUT) 205.00 SILT-TIGHT JOINT TYPE OFFSET CONNECTION AT INLETS
SHEET 11	
11-1	I ST'D DI-3B (L=6') REQ'D H = 4.0' INV.204.20 ST'D ST-1 REQ'D; CONNECT UD-4 TO STRUCTURE
11-1 TO 9-11	98 L.F.-18" STORM SEWER PIPE REQ'D (3' COVER) INV.(IN) 204.20 INV.(OUT) 203.80 SILT-TIGHT JOINT TYPE
11-2	NOT USED
11-3	NOT USED
11-4	I ST'D DI-2BB (L=10') REQ'D H = 9.5' INV.199.05 ST'D ST-1 REQ'D; CONNECT UD-4 TO STRUCTURE
11-4 TO 11-5	5 L.F.-18" STORM SEWER PIPE REQ'D (8' COVER) INV.(IN) 199.05 INV.(OUT) 199.00 SILT-TIGHT JOINT TYPE
11-5	I ST'D ES-1 OR 2 (18") REQ'D INV.(OUT) 199.00 OUTLET TO EXISTING FLUME

AFC PLANS

KYLE E. KENNEDY Lic. No. 45092 COMMONWEALTH OF VIRGINIA PROFESSIONAL ENGINEER

Kyle Kennedy
2022.07.15 12:00:17 -04'00'

Whitman, Requardt & Associates
Richmond, Virginia
HYDRAULICS ENGINEER

REVISED	STATE	STATE ROUTE	STATE PROJECT	SHEET NO.
	VA.	95	0095-076-299,C-501	14(2)

DESIGN FEATURES RELATING TO CONSTRUCTION OR TO REGULATION AND CONTROL OF TRAFFIC MAY BE SUBJECT TO CHANGE AS DEEMED NECESSARY BY THE DEPARTMENT

ALLOWABLE TYPE OF STORM SEWER PIPE (UNLESS OTHERWISE SHOWN IN DRAINAGE DESCRIPTIONS)
(SEE ROAD AND BRIDGE STANDARD PC-1 FOR HEIGHT OF COVER LIMITATIONS FOR EACH TYPE)

LOCATION	CONCRETE	ALUMINUM COATED TYPE 2 STEEL SPIRAL RIB	POLYMER COATED (10/10) CORRUGATED STEEL SPIRAL RIB	POLYMER COATED (10/10) CORRUGATED STEEL DOUBLE WALL (SMOOTH INTERIOR)	ALUMINUM SPIRAL RIB	POLYVINYLCHLORIDE (PVC) RIBBED PIPE (SMOOTH INTERIOR)	POLYETHYLENE (PE) CORRUGATED TYPE S	POLYPROPYLENE (PP) TYPE D OR S
ENTIRE PROJECT	X							

0095-076-299 SHEET NO. 14(2)

LIMITED ACCESS HIGHWAY By Resolution of the Highway Commission dated October 4, 1956
By Resolution of the Highway Commission dated January 18, 1973
By Resolution of the Commonwealth Transportation Board dated April 19, 2022

PROJECT MANAGER Rimpal Shah, P.E. (703) 259-2362 (NOVA District)
SURVEYED BY, DATE H&B Surveying and Mapping, LLC. (804) 330-3781, 03/09/2021
DESIGN BY Whitman, Requardt & Associates, LLP. (804) 272-8700
SUBSURFACE UTILITY BY, DATE Accumark, Inc. (804) 550-7740, 07/07/2021

Drainage Profiles
6-1A to 5-3

5' SCALE: HOR. 1"=25' VERT. 1"=5'
0 25'

Legend
Proposed Ground
Existing Ground
Hydraulic Grade Line

COMMONWEALTH OF VIRGINIA
KYLE E. KENNEDY
Lic. No. 45092
PROFESSIONAL ENGINEER

Kyle Kennedy
2022.07.15 12:00:32 -04'00'

Whitman, Requardt & Associates
Richmond, Virginia
HYDRAULICS ENGINEER

REVISED	STATE	STATE ROUTE	STATE PROJECT	SHEET NO.
	VA.	95	0095-076-299, C-501	14(3)

DESIGN FEATURES RELATING TO CONSTRUCTION OR TO REGULATION AND CONTROL OF TRAFFIC MAY BE SUBJECT TO CHANGE AS DEEMED NECESSARY BY THE DEPARTMENT

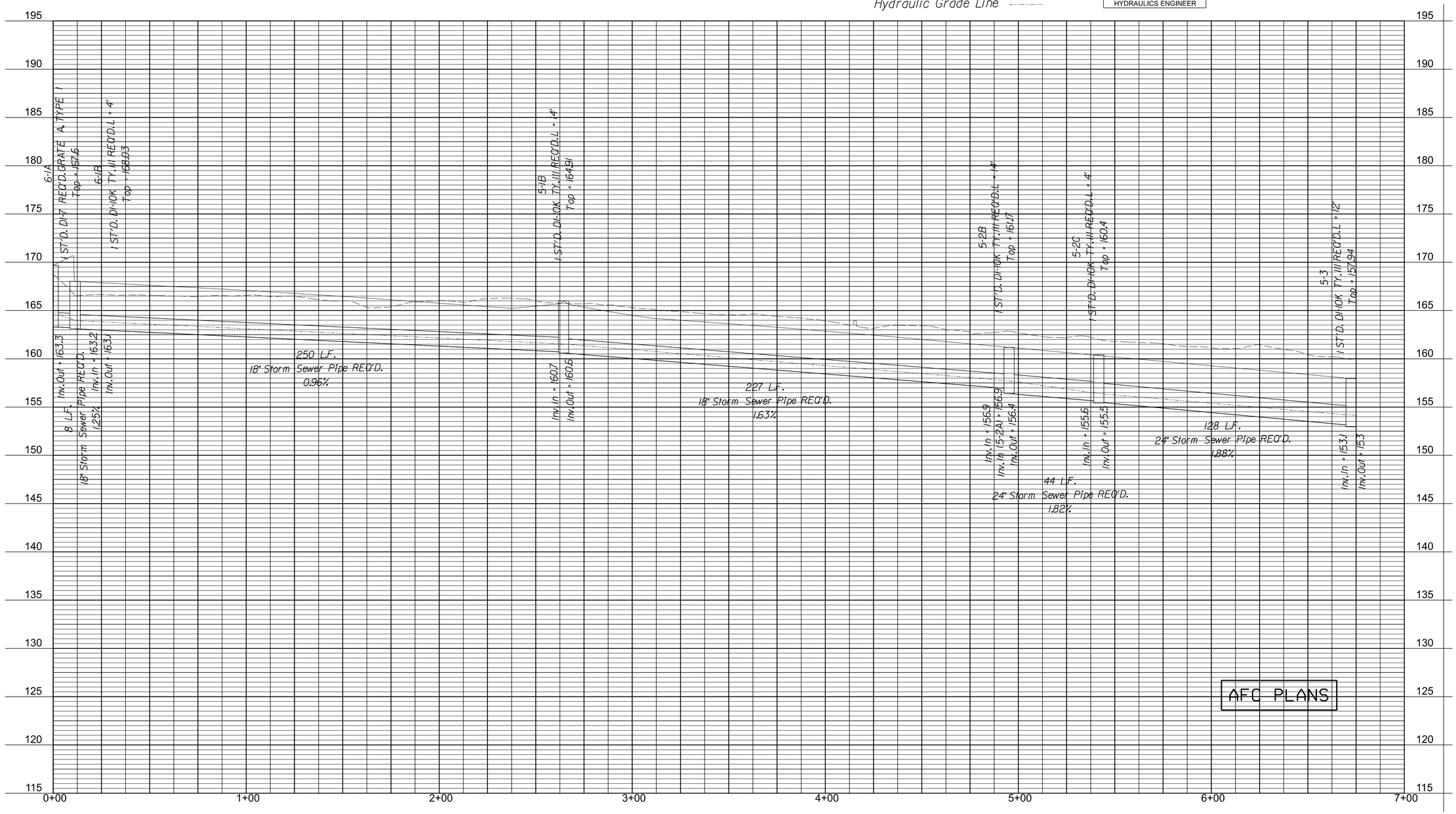

AFC PLANS

	PROJECT	SHEET NO.
	0095-076-299	14(3)

7/11/2022 Drainage profiles sheet 5 and 6.dgn
9:36:34 AM Plotted By: jlopez-ornelas

LIMITED ACCESS HIGHWAY By Resolution of the Highway Commission dated October 4, 1956
By Resolution of the Highway Commission dated January 18, 1973
By Resolution of the Commonwealth Transportation Board dated April 19, 2022

PROJECT MANAGER Rimpal Shah, P.E. (703) 259-2362 (NOVA District)
SURVEYED BY, DATE H&B Surveying and Mapping, LLC (804) 330-3781 03/09/2021
DESIGN BY Whitman, Requardt & Associates, LLP (804) 272-8700
SUBSURFACE UTILITY BY, DATE Accumark, Inc. (804) 550-7740 07/07/2021

AFC PLANS

COMMONWEALTH OF VIRGINIA
KYLE E. KENNEDY
Lic. No. 45092
PROFESSIONAL ENGINEER

Kyle Kennedy
2022.07.15 12:00:54 -04'00'

Whitman, Requardt & Associates
Richmond, Virginia
HYDRAULICS ENGINEER

REVISED	STATE	STATE ROUTE	STATE PROJECT	SHEET NO.
	VA.	95	0095-076-299, C-501	14(4)

DESIGN FEATURES RELATING TO CONSTRUCTION OR TO REGULATION AND CONTROL OF TRAFFIC MAY BE SUBJECT TO CHANGE AS DEEMED NECESSARY BY THE DEPARTMENT

Drainage Profiles
5-3 TO 5-7

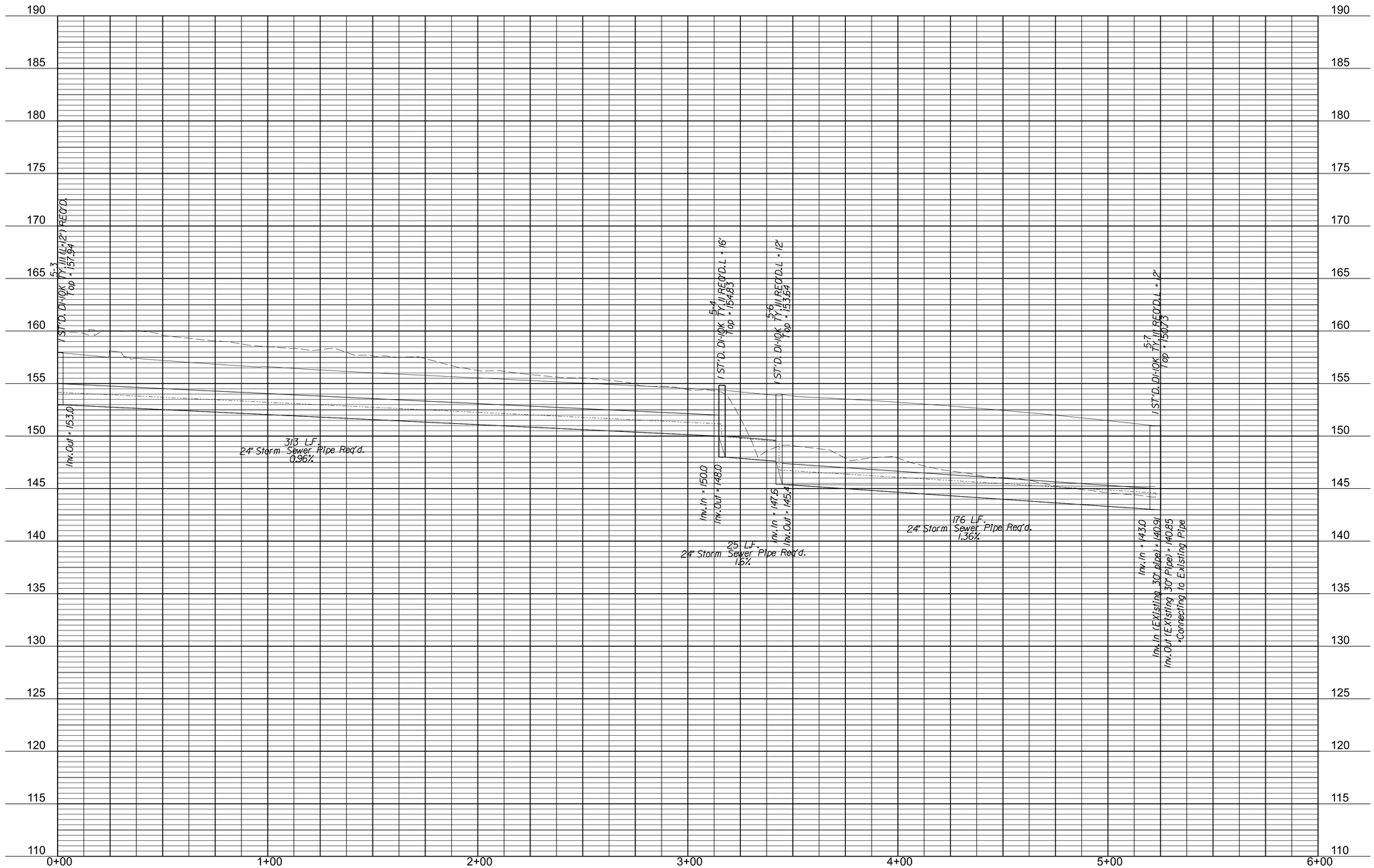

	PROJECT	SHEET NO.
	0095-076-299	14(4)

Cell Revised 12/1/12

LIMITED ACCESS HIGHWAY By Resolution of the Highway Commission dated October 4, 1956.
By Resolution of the Highway Commission dated January 18, 1973.
By Resolution of the Commonwealth Transportation Board dated April 19, 2022

PROJECT MANAGER Rimpal Shah, P.E. (703) 259-2362 (NOVA District)
SURVEYED BY, DATE H&B Surveying and Mapping, LLC. (804) 330-3781, 03/09/2021
DESIGN BY Whitman, Requardt & Associates, LLP. (804) 272-8700
SUBSURFACE UTILITY BY, DATE Accumark, Inc. (804) 550-7740, 07/07/2021

Drainage Profiles

5′
SCALE:
HOR. 1"=25′
VERT. 1"=5′
0 25′

Legend
Proposed Ground
Existing Ground
Hydraulic Grade Line

COMMONWEALTH OF VIRGINIA
KYLE E. KENNEDY
Lic. No. 45092
PROFESSIONAL ENGINEER

Kyle Kennedy
2022.07.15 12:01:15 -04'00'

Whitman, Requardt & Associates
Richmond, Virginia
HYDRAULICS ENGINEER

REVISED	STATE	STATE ROUTE	STATE PROJECT	SHEET NO.
	VA.	95	0095-076-299, C-501	14(5)

DESIGN FEATURES RELATING TO CONSTRUCTION OR TO REGULATION AND CONTROL OF TRAFFIC MAY BE SUBJECT TO CHANGE AS DEEMED NECESSARY BY THE DEPARTMENT

Profile 5-10 to 5-11

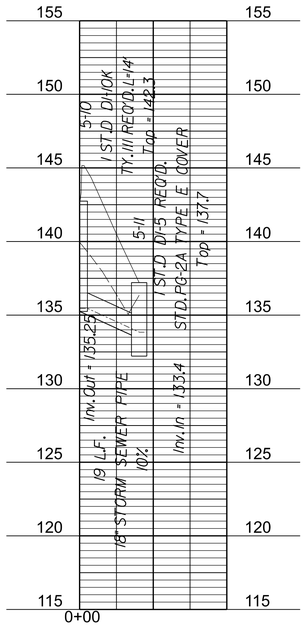

Profile 5-1A to 5-1B

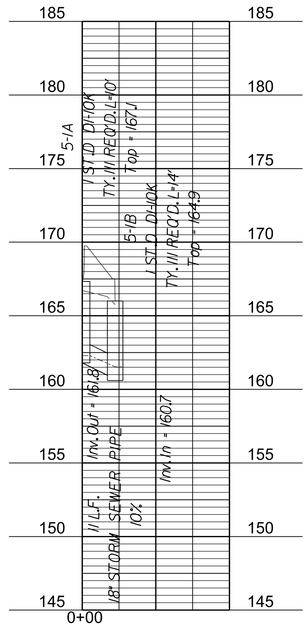

Profile 4-4 to 4-5

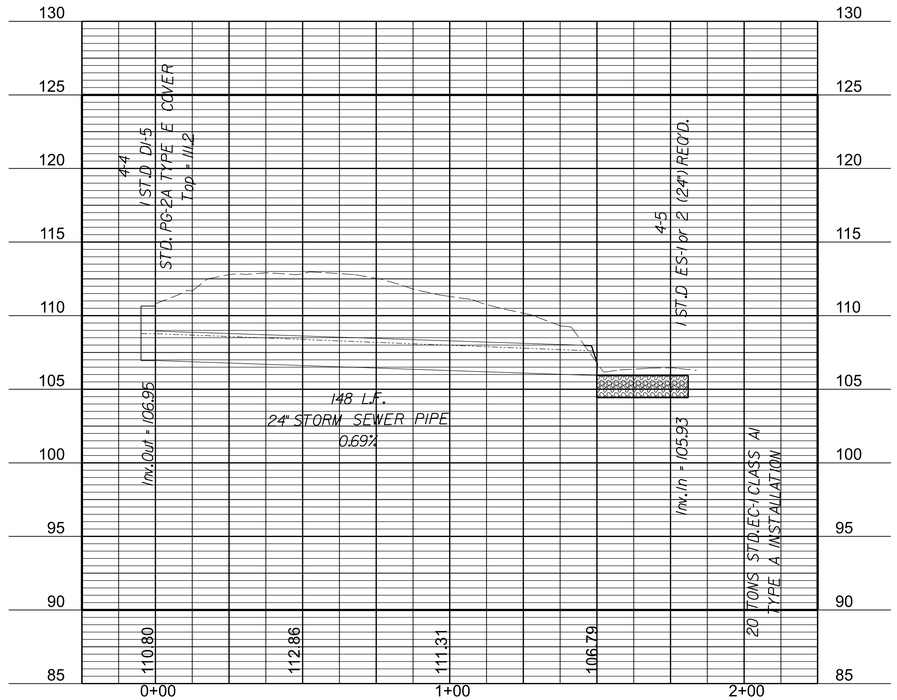

Profile 5-5 to 5-6

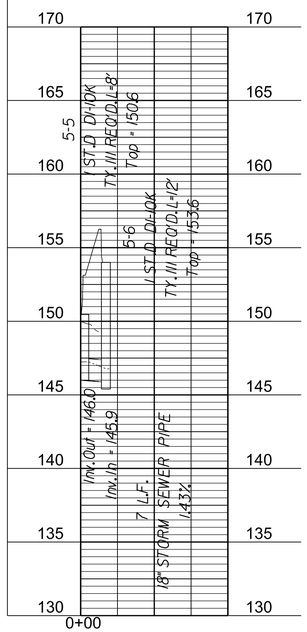

Profile 5-2A to 5-2B

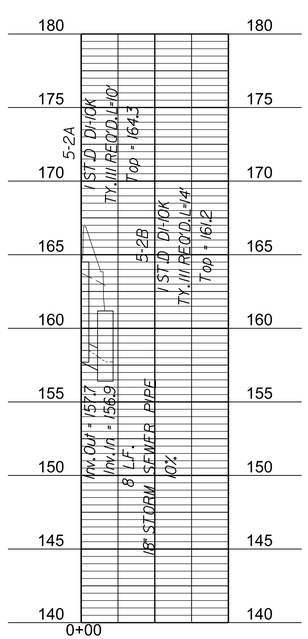

AFC PLANS

PROJECT	SHEET NO.
0095-076-299	14(5)

Civil Revised 12/11/12

7/11/2022 ORD profiles.dgn
9:37:01 AM Plotted By: jlopez-ornelas

LIMITED ACCESS HIGHWAY By Resolution of the Highway Commission dated October 4, 1956.
By Resolution of the Highway Commission dated January 18, 1973.
By Resolution of the Commonwealth Transportation Board dated April 19, 2022

PROJECT MANAGER Rimpal Shah, P.E. (703) 259-2362 (NOVA District)
SURVEYED BY, DATE H&B Surveying and Mapping, LLC. (804) 330-3781, 03/09/2021
DESIGN BY Whitman, Requardt & Associates, LLP. (804) 272-8700
SUBSURFACE UTILITY BY, DATE Accumark, Inc. (804) 550-7740, 07/07/2021

Profile 9-1A to 9-1B

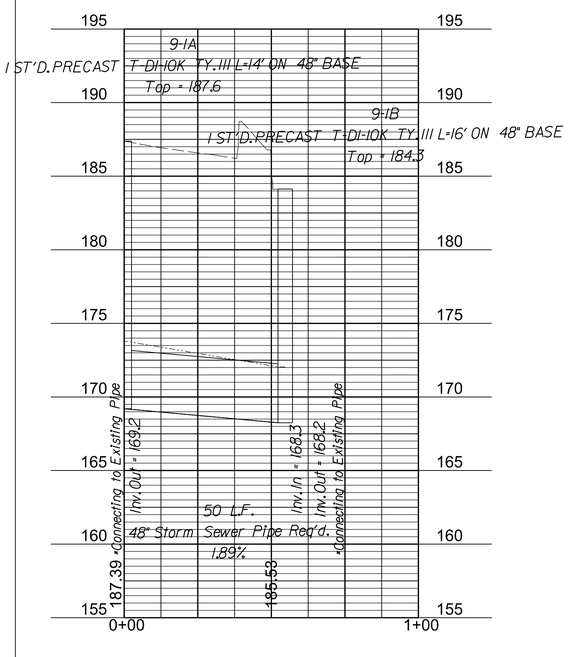

Profile 9-4 to 9-5

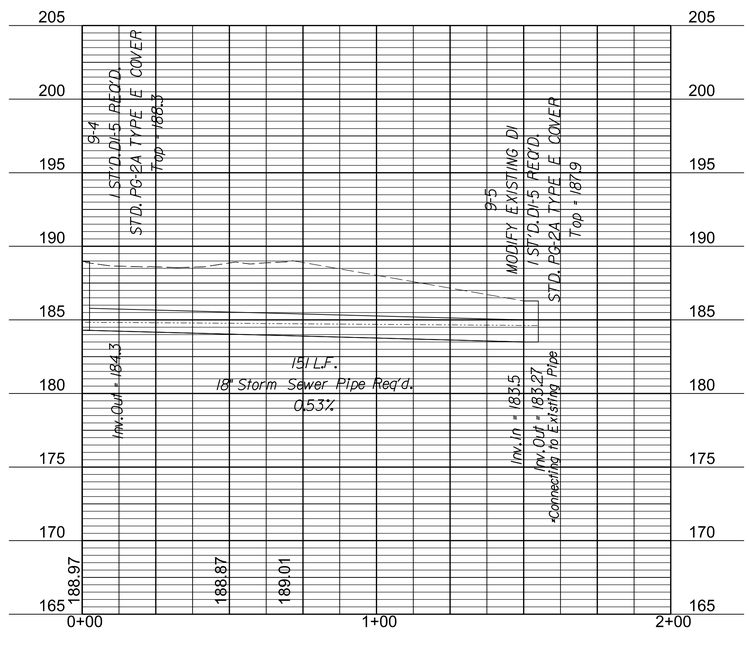

Profile 10-4 to 9-7

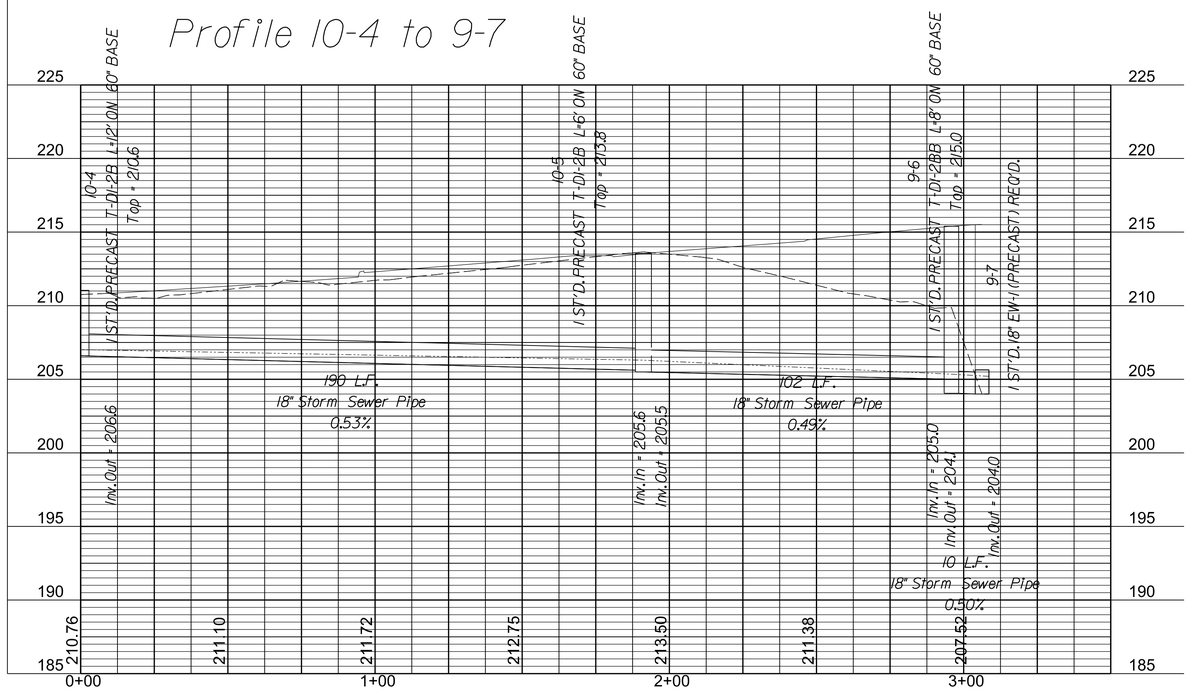

Legend

Proposed Ground
Existing Ground
Hydraulic Grade Line

5'
SCALE:
HOR. 1"=25'
VERT. 1"=5'
0 25'

AFC PLANS

KYLE E. KENNEDY
Lic. No. 45092
COMMONWEALTH OF VIRGINIA
PROFESSIONAL ENGINEER

Kyle Kennedy
2022.07.15 12:01:39 -04'00'

Whitman, Requardt & Associates
Richmond, Virginia
HYDRAULICS ENGINEER

REVISED	STATE	STATE ROUTE	STATE PROJECT	SHEET NO.
	VA.	95	0095-076-299, C-501	14(6)

DESIGN FEATURES RELATING TO CONSTRUCTION OR TO REGULATION AND CONTROL OF TRAFFIC MAY BE SUBJECT TO CHANGE AS DEEMED NECESSARY BY THE DEPARTMENT

PROJECT	SHEET NO.
0095-076-299	14(6)

Cell Revised 12/11/12

7/11/2022 ORD profiles.dgn
9:37:02 AM Plotted By: jlopez-ornelas

LIMITED ACCESS HIGHWAY By Resolution of the Highway Commission dated October 4, 1956
By Resolution of the Highway Commission dated January 18, 1973
By Resolution of the Commonwealth Transportation Board dated April 19, 2022

PROJECT MANAGER Rimpal Shah, P.E. (703) 259-2362 (NOVA District)
SURVEYED BY, DATE H&B Surveying and Mapping, LLC. (804) 330-3781, 03/09/2021
DESIGN BY Whitman, Requardt & Associates, LLP (804) 272-8700
SUBSURFACE UTILITY, DATE Accumark, Inc. (804) 550-7740, 07/07/2021

Profile 9-2 to 8-2B

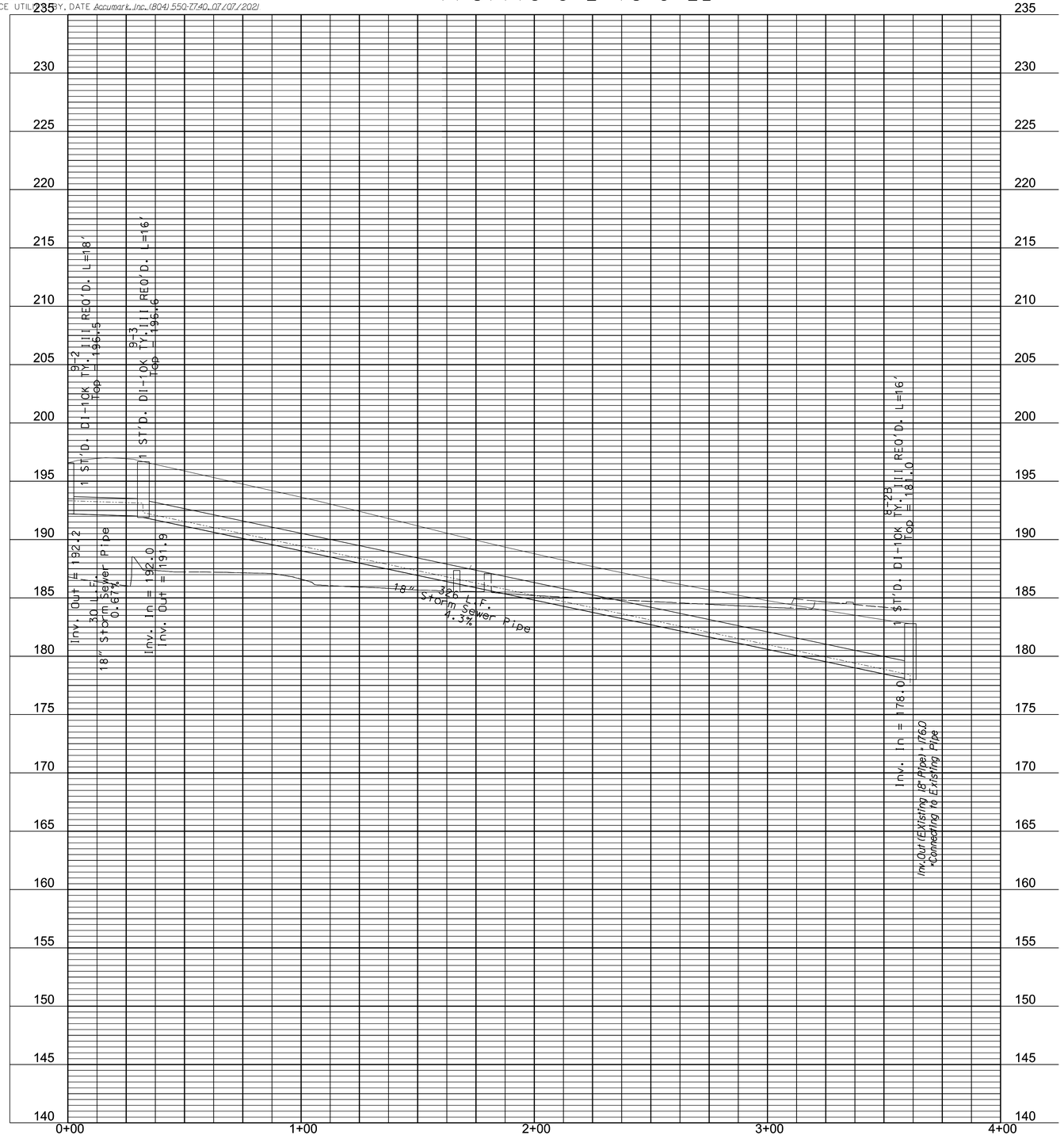

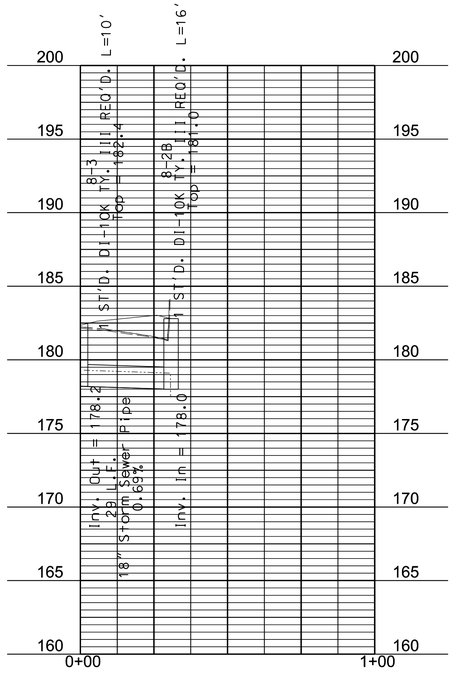

Profile 8-3 to 8-2B

Legend

Proposed Ground
Existing Ground
Hydraulic Grade Line

SCALE: HOR. 1"=25' VERT. 1"=5'
0 25'

AFC PLANS

KYLE E. KENNEDY
Lic. No. 45092
COMMONWEALTH OF VIRGINIA
PROFESSIONAL ENGINEER

Kyle Kennedy
2022.07.15 12:02:11 -04'00'

Whitman, Requardt & Associates
Richmond, Virginia
HYDRAULICS ENGINEER

REVISED	STATE	STATE ROUTE	STATE PROJECT	SHEET NO.
	VA.	95	0095-076-299, C-501	14(7)

DESIGN FEATURES RELATING TO CONSTRUCTION OR TO REGULATION AND CONTROL OF TRAFFIC MAY BE SUBJECT TO CHANGE AS DEEMED NECESSARY BY THE DEPARTMENT

	PROJECT	SHEET NO.
	0095-076-299	14(7)

Roll Revised 12/11/12

7/11/2022 ORD profiles.dgn
9:37:03 AM Plotted By: jlopez-ornelas

LIMITED ACCESS HIGHWAY By Resolution of the Highway Commission dated October 4, 1956
By Resolution of the Highway Commission dated January 18, 1973
By Resolution of the Commonwealth Transportation Board dated April 19, 2022

PROJECT MANAGER Rimpal Shah, P.E. (703) 259-2362 (NOVA District)
SURVEYED BY, DATE H&B Surveying and Mapping, LLC (804) 330-3781, 03/09/2021
DESIGN BY Whitman, Requardt & Associates, LLP (804) 272-8700
SUBSURFACE UTILITY BY, DATE Accumark, Inc. (804) 550-7740, 07/07/2021

Profile 11-1 to 11-3

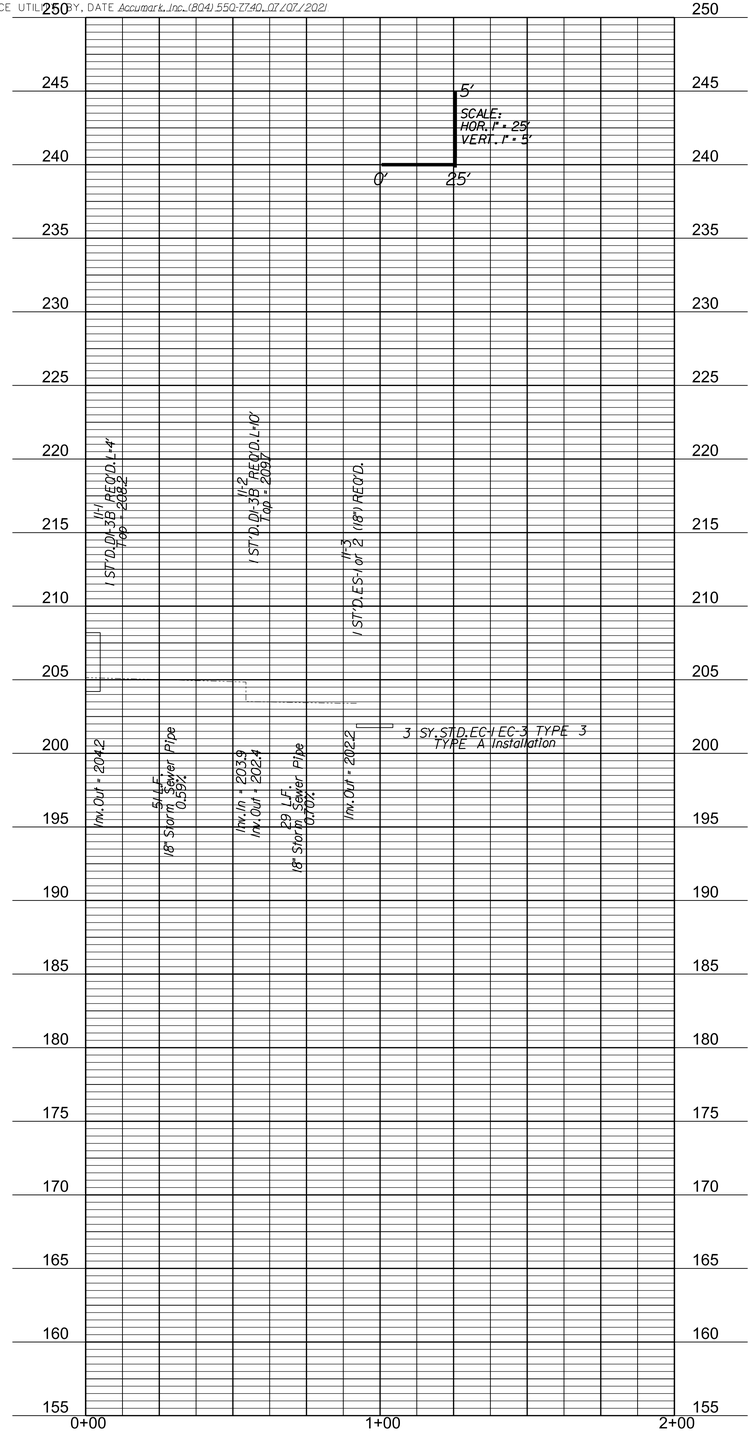

Profile 11-4 to 11-5

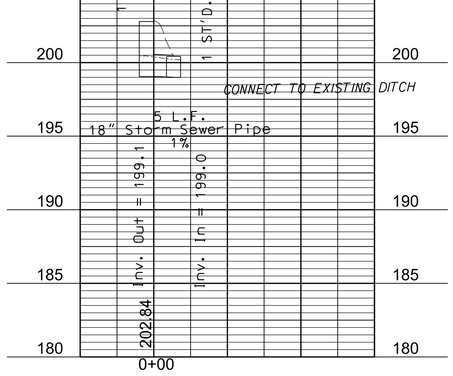

Legend

Proposed Ground
Existing Ground
Hydraulic Grade Line

5'
SCALE:
HOR. 1"=25'
VERT. 1"=5'
0 25'

Profile 9-9 to 9-10

AFC PLANS

COMMONWEALTH OF VIRGINIA
KYLE E. KENNEDY
Lic. No. 45092
PROFESSIONAL ENGINEER

Kyle Kennedy
2022.07.15 12:02:27 -04'00'

Whitman, Requardt & Associates
Richmond, Virginia
HYDRAULICS ENGINEER

REVISED	STATE	STATE ROUTE	STATE PROJECT	SHEET NO.
	VA.	95	0095-076-299, C-501	14(8)

DESIGN FEATURES RELATING TO CONSTRUCTION OR TO REGULATION AND CONTROL OF TRAFFIC MAY BE SUBJECT TO CHANGE AS DEEMED NECESSARY BY THE DEPARTMENT

	PROJECT	SHEET NO.
	0095-076-299	14(8)

Cell Revised 12/11/12

7/11/2022 Drainage profiles sheet 5 and 6.dgn
9:37:23 AM Plotted By: jlopez-ornelas

LIMITED ACCESS HIGHWAY By Resolution of the Highway Commission dated October 4, 1956
By Resolution of the Highway Commission dated January 18, 1973
By Resolution of the Commonwealth Transportation Board dated April 19, 2022

PROJECT MANAGER Rimpal Shah, P.E. (703) 259-2362 (NOVA District)
SURVEYED BY, DATE H&B Surveying and Mapping, LLC (804) 330-3781, 03/09/2021
DESIGN BY Whitman, Requardt & Associates, LLP (804) 272-8700
SUBSURFACE UTILITY BY, DATE Accumark, Inc. (804) 550-7740, 07/07/2021

REVISED	STATE	STATE ROUTE	STATE PROJECT	SHEET NO.
	VA.	95	0095-076-299, C-501	14(9)

COMMONWEALTH OF VIRGINIA
KYLE E. KENNEDY
Lic. No. 45092
PROFESSIONAL ENGINEER

Kyle Kennedy
2022.07.15 12:02:45 -04'00'
Whitman, Requardt & Associates
Richmond, Virginia
HYDRAULICS ENGINEER

DESIGN FEATURES RELATING TO CONSTRUCTION OR TO REGULATION AND CONTROL OF TRAFFIC MAY BE SUBJECT TO CHANGE AS DEEMED NECESSARY BY THE DEPARTMENT

Profile 5-8 to 4-3

Legend
Proposed Ground
Existing Ground
Hydraulic Grade Line

SCALE: HOR. 1"=25' VERT. 1"=5'

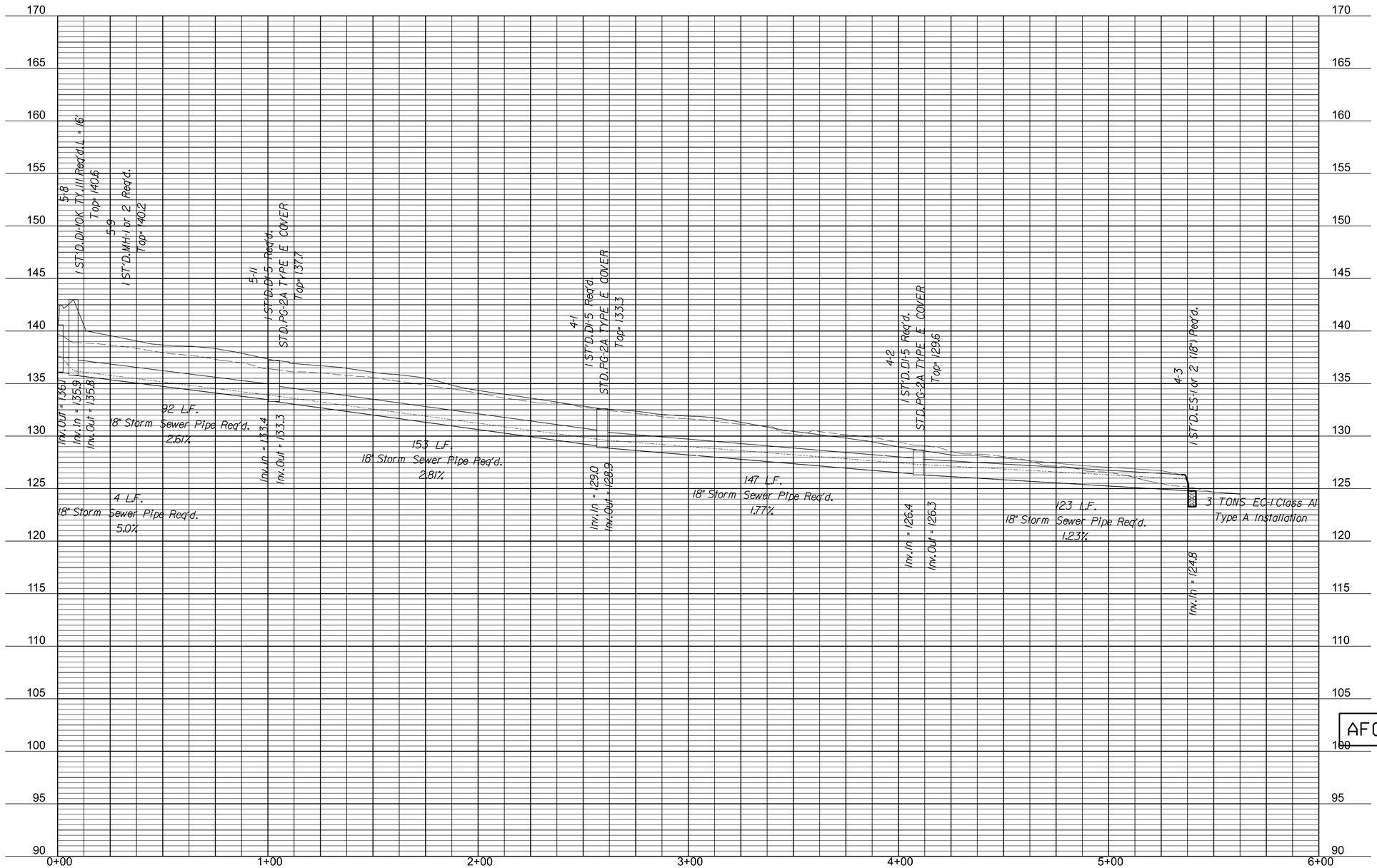

AFC PLANS

PROJECT	SHEET NO.
0095-076-299	14(9)

Cell Revised 12/11/12

7/18/2022 4589300101501(01).dgn
7:18:38 PM Plotted By: kfisher

LIMITED ACCESS HIGHWAY By Resolution of the Highway Commission dated October 4, 1956.
By Resolution of the Highway Commission dated January 18, 1973.
By Resolution of the Commonwealth Transportation Board dated April 19, 2022

PROJECT MANAGER Rimpal Shah, P.E. (703) 259-2362 (NOVA District) _____
SURVEYED BY, DATE H&B Surveying and Mapping, LLC (804) 330-3781, 03/09/2021
DESIGN BY Whitman, Requardt, & Associates, LLP (804) 212-8700 _____.
SUBSURFACE UTILITY BY, DATE Accumark, Inc. (804) 550-7740, 07/07/2021

COMMONWEALTH OF VIRGINIA
JEFFREY D. CHENG
Lic. No. 051900
PROFESSIONAL ENGINEER

Jeffrey D Cheng
2022.07.20 15:03:52 -04'00'

Whitman, Requardt & Associates
Baltimore, Maryland
TRAFFIC ENGINEER

REVISED	STATE	STATE ROUTE	STATE PROJECT	SHEET NO.
	VA.	95	0095-076-299,C-501	15(1)

DESIGN FEATURES RELATING TO CONSTRUCTION OR TO REGULATION AND CONTROL OF TRAFFIC MAY BE SUBJECT TO CHANGE AS DEEMED NECESSARY BY THE DEPARTMENT

TMS KEY PLAN

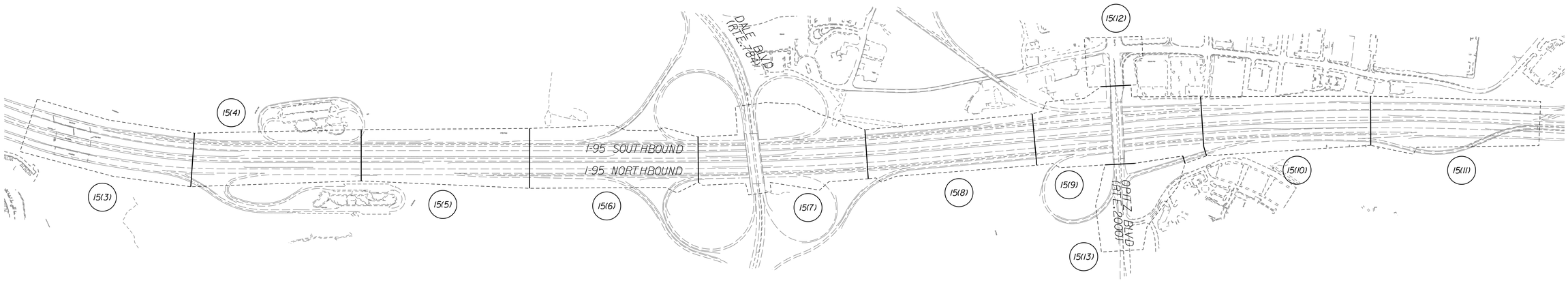

SHEET INDEX

15(1)	TMS SHEET INDEX, KEY PLAN, AND ABBREVIATIONS
15(1A)	GENERAL NOTES
15(1B)	LEGEND
15(1C)	EQUIPMENT SCHEDULES
15(2A1) - 15(2A7)	TMS COMMON DETAILS
15(2B1) - 15(2B18)	GATE DETAILS
15(2C1) - 15(2C4)	GENERATOR SITE PLANS AND DETAILS
15(2D1) - 15(2D4)	SERVICE PANEL DETAILS
15(2E1) - 15(2E11)	POWER DISTRIBUTION DIAGRAMS AND PANEL SCHEDULES
15(2F1) - 15(2F15)	FIBER CONNECTION DIAGRAMS
15(2G1) - 15(2G6)	DEVICE CROSS SECTIONS
15(3) - 15(13)	PLAN SHEETS

ABBREVIATIONS

CCTV	- CLOSED-CIRCUIT TELEVISION
COMM	- COMMUNICATIONS
DIST.	- DISTRIBUTION
EX.	- EXISTING
MM	- MILEMARKER
MVD	- MICROWAVE VEHICLE DETECTOR
NO.	- NUMBER
PR.	- PROPOSED
SP	- SERVICE PANEL
TMS	- TRAFFIC MANAGMENT SYSTEM
XPL	- EXPRESS LANES

AFC PLANS

	PROJECT	SHEET NO.
	0095-076-299	15(1)

Cell Revised 12/11/12

LIMITED ACCESS HIGHWAY

By Resolution of the Highway Commission dated October 4, 1956.
By Resolution of the Highway Commission dated January 18, 1973.
By Resolution of the Commonwealth Transportation Board dated April 19, 2022

PROJECT MANAGER Rimpal Shah, P.E. (703) 259-2362 (NOVA District) _____
SURVEYED BY, DATE B&B Surveying and Mapping, LLC (804) 330-3781, 03/09/2021
DESIGN BY Whitman, Requardt, & Associates, LLP (804) 212-8700 _____
SUBSURFACE UTILITY BY, DATE Accumark, Inc. (804) 550-7740, 07/07/2021

TMS GENERAL NOTES

GENERAL NOTES FOR TRAFFIC MANAGEMENT SYSTEM WORK:

1. ALL VDOT AND 95 EXPRESS LANES FIBER OPTIC AND COMMUNICATIONS CABLES TO REMAIN IN PLACE AND OPERATIONAL UNLESS OTHERWISE NOTED ON THE PLANS.
2. EXISTING VDOT AND 95 EXPRESS LANES TRAFFIC MANAGEMENT SYSTEMS EQUIPMENT IS SHOWN ON THE PLANS. LOCATIONS AND OPERATIONS HAVE NOT BEEN VERIFIED.THE CONTRACTOR SHALL FIELD VERIFY ALL LOCATIONS AND OPERATION PRIOR TO COMMENCING WORK THAT WILL IMPACT THE SYSTEM.
3. THE CONTRACTOR SHALL NOTIFY THE VDOT AND 95 EXPRESS LANES ENGINEER OF EQUIPMENT THAT IS NOT OPERATIONAL PRIOR TO THE START OF WORK THAT WILL IMPACT THE SYSTEM.VDOT AND 95 EXPRESS LANES WILL RESTORE OPERATION OF THE EQUIPMENT PRIOR TO THE START OF WORK OR WILL OTHERWISE EXEMPT THE CONTRACTOR FROM ANY REQUIRED MAINTENANCE OF THE EQUIPMENT.
4. EXISTING VDOT AND 95 EXPRESS LANES TRAFFIC MANAGEMENT SYSTEMS EQUIPMENT SHALL REMAIN IN SERVICE EXCEPT AS NOTED ON THE PLANS OR OTHERWISE APPROVED BY THE VDOT AND 95 EXPRESS LANES ENGINEER.
5. TRAFFIC MANAGEMENT SYSTEMS EQUIPMENT THAT IS FOUND DURING THE COURSE OF CONSTRUCTION THAT IS NOT SHOWN ON THE PLANS SHALL BE GOVERNED BY THE SAME PROVISIONS OF THESE GENERAL NOTES.
6. COMMUNICATION AND DEVICE CABLES MAY ONLY BE SPLICED IN EQUIPMENT CABINETS AND PEDESTALS.UNLESS OTHERWISE INDICATED IN THE PLANS.NO SPLICES SHALL BE MADE IN UNDERGROUND ENCLOSURES.
7. PULL WIRES UNCUT BETWEEN THE SERVICE PANEL AND THE EQUIPMENT CABINET.SPLICING IS ONLY PERMITTED WHEN THE LENGTH EXCEEDS THE AMOUNT ON A SUPPLIED REEL,WHEN THE CONDUCTOR SIZE IS LARGER THAN #4 AWG,OR WHERE SHOWN ON THE PLANS.ENGINEER APPROVED SPLICE KITS MUST BE USED FOR SUCH SPLICES UNLESS OTHERWISE NOTED IN THE PLANS.
8. IN THE EVENT THAT VDOT AND 95 EXPRESS LANES COMMUNICATION CABLE IS DAMAGED DUE TO CONSTRUCTION ACTIVITY,NOTIFY VDOT AND 95 EXPRESS LANES IMMEDIATELY AND REPLACE ALL EXISTING CABLES IN KIND AT THE CONTRACTOR'S EXPENSE. REPAIRS SHALL BE COMPLETED AT LEAST TWO HOURS PRIOR TO THE NEXT TRAFFIC PEAK
9. COORDINATE WITH VDOT AND 95 EXPRESS LANES FOR ACCESS TO TRAFFIC MANAGEMENT SYSTEM EQUIPMENT CABINETS. COORDINATE WITH VDOT AND 95 EXPRESS LANES FOR ANY WORK IMPACTING VDOT OR 95 EXPRESS LANES FACILITIES OR EQUIPMENT IN ACCORDANCE WITH THE CONTRACT SPECIAL PROVISIONS.
10. EXISTING CONDUITS AND CABLES SHOWN ARE BASED ON AS BUILT PLAN INFORMATION AND MAY NOT BE COMPLETE.CONTRACTOR SHALL FIELD VERIFY EXISTING CONDITIONS PRIOR TO THE START OF WORK AND THE CONTRACTOR SHALL NOTIFY THE ENGINEER IF ANY DISCREPANCIES ARE FOUND THAT AFFECT THE ABILITY TO INSTALL PROPOSED EQUIPMENT AS SHOWN IN THE PLANS OR AS INDICATED IN THE PROJECT SPECIFICATIONS.
11. THE CONTRACTOR SHALL PROVIDE ACCESS SWITCHES TO THE 95 EXPRESS ENGINEER FOR CONFIGURATION.UPON COMPLETION 95 EXPRESS WILL RETURN THE SWITCHES TO THE CONTRACTOR FOR INSTALLATION.
12. ALL PROPOSED 95 EXPRESS LANES TRUNK AND DISTRIBUTION FIBER OPTIC CABLES SHALL BE ARMORED. ALL ARMORED FIBER OPTIC CABLES SHALL BE BONDED IN THE CABINET OR OTHER TERMINATION POINT. REFER TO THE PROJECT SPECIAL PROVISIONS FOR ADDITIONAL DETAILS.
13. THE CONTRACTOR SHALL SUBMIT A NOTIFICATION OF IMPACT (NOI) FOR ALL IMPACTS TO EXISTING 95 EXPRESS OR VDOT TMS ASSETS CAUSED BY THE CONTRACTOR'S CONSTRUCTION ACTIVITIES. REFER TO THE PROJECT SPECIAL PROVISIONS FOR ADDITIONAL DETAILS OF THE NOI PROCEDURE.
14. THE CONTRACTOR SHALL PREPARE AND SUBMIT FOR APPROVAL A NETWORK CUTOVER PLAN FOR INTEGRATING NEW DEVICES INTO THE EXISTING SYSTEM AND FOR REMOVAL/MODIFICATION OF EXISTING DEVICES. REFER TO THE SPECIAL PROVISIONS FOR ADDITIONAL NETWORK CUTOVER PLAN REQUIREMENTS.
15. THE CONTRACTOR SHALL PROVIDE GLOBAL POSITIONING SYSTEM (GPS) LOCATION DATA (COORDINATES) IN SPREADSHEET FORMAT OF ALL INSTALLED TMS FIELD DEVICES,INCLUDING BUT NOT LIMITED TO: JUNCTION BOXES (ELECTRICAL AND COMMUNICATION), SPLICE CABINETS, CCTV AND AID CAMERAS, DYNAMIC MESSAGE SIGN (DMS), MICROWAVE VEHICLE DETECTORS, GATES, POLE AND GROUND MOUNTED CABINETS, ROADWAY LIGHTING, AND ELECTRICAL SERVICE PANELS. A SPREADSHEET OF ALL INSTALLED OR MODIFIED TMS FIELD DEVICES, INCLUDING AT A MINIMUM THE DEVICE LOCATION, MODEL NUMBER, SERIAL NUMBER, AND TEST ACCEPTANCE DATE SHALL BE PROVIDED AS PART OF THE AS-BUILT DOCUMENTS. REFER TO THE SPECIAL PROVISIONS FOR ADDITIONAL AS-BUILT DOCUMENTATION REQUIREMENTS.
16. ALL EXISTING ITS DEVICES DESIGNATED TO BE REMOVED ON THE PLANS SHALL BE SALVAGED AND RETURNED TO THE ORIGINAL OWNER (95 EXPRESS OR VDOT). THE ITS DEVICES SHALL INCLUDE, BUT NOT BE LIMITED TO, DYNAMIC MESSAGE SIGNS (DMS), ROADWAY GATES, CCTV CAMERAS, AID CAMERAS, VEHICLE DETECTORS, RADIO ANTENNAS, AND CONTROL CABINETS INCLUDING ALL INTERNAL EQUIPMENT AND CONTROLLERS. THE CONTRACTOR SHALL COORDINATE WITH THE OWNER FOR THE SALVAGE AND DELIVERY OF ALL REMOVED EQUIPMENT TO A LOCATION SELECTED BY THE OWNER PRIOR TO PERFORMING ANY REMOVAL WORK. SHOULD THE OWNER DETERMINE THAT SALVAGING OF ANY EXISTING EQUIPMENT IS NOT REQUIRED, THE CONTRACTOR SHALL REMOVE AND DISPOSE OF THIS EQUIPMENT.
17. THE CONTRACTOR SHALL REMOVE AND DISPOSE OF ALL ITS STRUCTURES DESIGNATED TO BE REMOVED ON THE PLANS. THE CONTRACTOR SHALL REMOVE ALL FOUNDATIONS DESIGNATED TO BE REMOVED ON THE PLANS TO A DEPTH OF 2 FEET BELOW GRADE AND BACKFILL, SEED, AND MULCH.
18. THE MAXIMUM ALLOWED CABLE LENGTH OF CATEGORY 5 OR 6 ETHERNET CABLE IS 328 FEET. IF A LONGER RUNNING DISTANCE IS NEEDED, THE CONTRACTOR SHALL PROVIDE A MEDIA CONVERTER TO CONVERT ETHERNET DATA TO FIBER OPTIC SIGNALS WITH APPROVAL FROM THE 95 EXPRESS LANES ENGINEER.

CONDUIT INSTALLATION NOTES:

1. CONDUIT SHALL BE DIRECTIONALLY BORED WHERE PLANS SHOW BORED CONDUIT.
2. CONDUIT SHOWN AS TRENCHED MAY BE BORED ONLY WITH THE APPROVAL OF THE VDOT AND 95 EXPRESS LANES ENGINEER.
3. INSTALL AN EQUIPMENT GROUNDING CONDUCTOR ("EGC") IN ALL NON-METALLIC POWER CONDUITS EXCEPT SPARES. THE "EGC" SIZE SHALL BE THE SAME AS THE LARGEST POWER CONDUCTOR IN THE CONDUIT, BUT NO SMALLER THAN #8.
4. INSTALL 3-BARREL INNERDUCT IN ALL 4 INCH COMMUNICATION CONDUITS THAT HAVE CABLES INSTALLED AS PART OF THE PROJECT.
5. TRENCH EXCAVATION IN EARTH AREAS SHALL CONFORM TO STANDARD DRAWING EC(-)1 UNLESS OTHERWISE NOTED. THE EC(-)1 STANDARD SHALL BE CONSIDERED MODIFIED TO ALLOW GREATER THAN 24" OF COVER OVER THE CONDUITS. INSTALL COMMUNICATION CONDUIT AT MINIMUM OF 30 INCHES BELOW GRADE. THE REQUIRED DEPTH OF THE TRENCH IS MEASURED FROM THE LOW POINT OF THE SLOPE ABOVE.
6. USE EXISTING CONDUIT STUB-OUTS WHERE AVAILABLE, ACCESSIBLE, AND NOT CLOGGED IN LIEU OF INSTALLING NEW CONDUIT INTO EXISTING MANHOLES, JUNCTION BOXES, AND FOUNDATIONS.
7. WHEN INSTALLING NEW CABLE IN EXISTING DUCTS, DO NOT DISTURB THE EXISTING CABLES.

CONDUIT INSTALLATION NOTES (CONTINUED):

8. USE FRE CONDUIT FOR EXPOSED HORIZONTAL RUNS ON BRIDGES. USE RIGID GALVANIZED STEEL (RGS) CONDUIT FOR OTHER EXPOSED RUNS OR FOR CONDUIT RUNS BETWEEN EQUIPMENT OR SERVICE RISERS AND THE CLOSEST JUNCTION BOX. USE PVC CONDUIT FOR TRENCH RUNS. USE HDPE CONDUIT FOR BORED RUNS.
9. COORDINATE ALL WORK WITH OTHER CONTRACTORS TO AVOID CONFLICTS WITH OTHER WORK. CONDUITS SHALL AVOID BRIDGE PIERS, ABUTMENTS, GUARDRAIL POSTS, FOUNDATIONS, AND OTHER CIVIL WORKS.
10. A 4 FOOT MINIMUM SEPARATION SHALL BE MAINTAINED BETWEEN THE FACE OF GUARDRAIL AND THE TRENCH.
11. DIRECTIONAL BORING UNDER ROADWAY SHALL BE AT A MINIMUM DEPTH OF 5 FEET.
12. ALL CONDUIT AND JUNCTION BOXES SHALL BE INSTALLED AS SHOWN ON THE PLANS. CONTACT THE VDOT AND 95 EXPRESS LANES ENGINEER IF FIELD CONDITIONS REQUIRE MODIFICATION.
13. CONTRACTOR SHALL TAKE MEASURES TO ENSURE CONDUIT INSTALLED IN PROXIMITY TO SOUNDWALLS IS SUITABLY PROTECTED DURING SOUNDWALL CONSTRUCTION.
14. ALL CONDUITS SHALL BE INSTALLED WITH A MINIMUM 2 FOOT CLEARANCE BETWEEN ALL THIRD PARTY WATER, GAS, SEWER, COMMUNICATIONS, POWER, DRAINAGE, OR OTHER UTILITY LINES UNLESS OTHERWISE APPROVED BY THE THIRD PARTY UTILITY OWNER AND THE ENGINEER.
15. ALL EXISTING SPARE CONDUIT OR SPARE CONDUIT SPACE/CAPACITY SHALL REMAIN UNLESS OTHERWISE NOTED ON THE PLANS OR AUTHORIZED FOR USE BY 95 EXPRESS.
16. CONDUIT DESIGNATED FOR XPL POWER, XPL COMMUNICATIONS, VDOT POWER, VDOT COMMUNICATIONS, XPL LIGHTING, VDOT LIGHTING, OR OTHER SPECIALIZED USE AND/OR OWNER SHALL ONLY TERMINATE IN JUNCTION BOXES OR VAULTS DESIGNATED FOR THE SAME USE AND/OR OWNER.

JUNCTION BOX NOTES:

1. DE-WATER ALL EXISTING JUNCTION BOXES BEFORE PERFORMING ANY WORK INSIDE OF THEM.
2. LIDS OF 95 EXPRESS LANES COMMUNICATION AND GATE COMMUNICATION JUNCTION BOXES SHALL BE LABELED "XPL COMM". LIDS OF 95 EXPRESS LANES POWER AND GATE POWER JUNCTION BOXES SHALL BE LABELED "XPL POWER". SEPARATE JUNCTION BOXES SHALL BE PROVIDED FOR GATE COMMUNICATIONS AND GATE POWER AS SHOWN ON THE PLANS. GATE COMMUNICATIONS AND POWER ARE NOT PERMITTED TO SHARE COMMON JUNCTION BOXES.
3. LIDS OF VDOT COMMUNICATION BOXES SHALL SAY "VDOT COMM". LIDS OF VDOT POWER BOXES SHALL SAY "VDOT ELEC".
4. CONTRACTOR SHALL FIELD VERIFY LOCATIONS OF ALL EXISTING MANHOLES AND JUNCTION BOXES BEFORE COMMENCING ANY WORK WITH THEM. IN CASE THE JUNCTION BOXES COULD NOT BE VERIFIED OR ARE NOT IN PLACE AS SHOWN IN PLANS, CONTACT ROGER ANDERSON (VDOT NRO ITS MAINTENANCE, OFFICE: 703-334-0877, MOBILE: 571-259-9682, ROGER.ANDERSON@VDOT.VIRGINIA.GOV) AND THE 95 EXPRESS LANES ENGINEER FOR FURTHER ACTION.
5. IN CASE OF SPACE CONSTRAINTS WHEN ADDING NEW CONDUITS TO EXISTING JUNCTION BOXES, CONTACT ROGER ANDERSON (VDOT NRO ITS MAINTENANCE, OFFICE: 703-334-0877, MOBILE: 571-259-9682, ROGER.ANDERSON@VDOT.VIRGINIA.GOV) AND THE 95 EXPRESS LANES ENGINEER TO DETERMINE DIFFERENT SIZE AND NUMBER OF CONDUITS TO MAKE THE CONNECTION. REVISIONS REQUIRE REVIEW AND APPROVAL FROM VDOT AND 95 EXPRESS LANES TO CONFIRM CONDUIT FILL IS LESS THAN 40%. IF STANDARD CLEARANES BETWEEN CONDUIT ENTRANCES AND/OR CONDUIT FILL CAPACITY CANNOT BE MET WITH THE ADDITION OF NEW CONDUITS AND CABLES, THE CONTRACTOR SHALL REPLACE THE EXISTING JUNCTION BOX.
6. JUNCTION BOXES MAY BE STAGGERED TO ALLOW TIE-INS. JUNCTION BOXES SHALL NOT BE INSTALLED IN LOW-LYING LOCATIONS WITH POOR DRAINAGE TO PREVENT WATER INTRUSION INTO JUNCTION BOXES.
7. FOR ALL COMMUNICATION JUNCTION BOXES LOCATED ON SLOPES 2:1 OR STEEPER, A MINIMUM 3'x6' FLAT AREA (4" THICK CONCRETE PAD) IMMEDIATELY ADJACENT TO THE DOWNSLOPE SIDE OF THE JUNCTION BOX SHALL BE PROVIDED TO ACCOMODATE MAINTENANCE PERSONNEL WORKSPACE AND PLACEMENT OF THE JUNCTION BOX LID WHEN REMOVED. THE 3'x6'x4" CONCRETE PAD SHALL BE CONSTRUCTED IN ACCORDANCE WITH THE CONCRETE TECHNICIAN PADS SHOWN ON THE CABINET FOUNDATION STANDARDS (CF-1 THROUGH CF-4) OF THE ROAD AND BRIDGE STANDARS AND THE ELECTRIC SERVICE WORK PAD AND CONCRETE TECHNICIAN WORK PAD REQUIREMENTS OF SECTION 700 AND SECTION 801 OF THE ROAD AND BRIDGE SPECIFICATIONS.

UTILITY NOTES:

1. THE EXISTING UNDERGROUND UTILITIES AND STORM SEWERS ARE NOT SHOWN IN THEIR EXACT LOCATION AND MAY NOT BE COMPLETE. ALL UTILITIES SHALL BE MARKED PRIOR TO INITIATION OF CONSTRUCTION. ARRANGE FOR MISS UTILITY TO MARK UNDERGROUND UTILITIES. IN ADDITION, CONTACT THE ENGINEER TO ARRANGE FOR VDOT TO MARK VDOT'S CABLES AND CONDUITS. PROVIDING TWO WORKING DAYS' NOTICE.
2. VERIFY THE DEPTH OF ALL EXISTING UNDERGROUND UTILITIES AT LOCATIONS WHERE PROPOSED CONDUIT BORE OR TRENCH IS CROSSING TO AVOID ANY DISRUPTION TO THE EXISTING UNDERGROUND UTILITIES.
3. AVOID IMPACTING ANY EXISTING UNDER-DRAIN SYSTEMS AT LOCATIONS WHERE PROPOSED CONDUIT BORE OR TRENCH IS CROSSING.

POWER DISTRIBUTION NOTES:

1. CABLES IDENTIFIED TO BE ABANDONED SHALL BE DISCONNECTED FROM THE CABINET, SERVICE PANEL, OR MID-POINT JUNCTION BOX AS SHOWN ON THE PLANS. EACH END OF ABANDONED CABLES SHALL BE LABELED "ABANDONED" PER THE REQUIREMENTS STATED IN THE SPECIAL PROVISIONS. ABANDONED CABLES SHALL BE PULLED FROM THE SERVICE PANEL OR CABINET TO THE NEAREST JUCTION BOX AND COILED SO THAT THE CABLE LABEL IS VISIBLE.
2. WHERE PROPOSED CONDUCTORS ARE INSTALLED IN EXISTING CONDUIT, THE CONTRACTOR SHALL INSTALL/MODIFY EXISTING EQUIPMENT GROUNDING CONDUCTOR (EGC) TO BE THE SAME AS THE LARGEST POWER CONDUCTOR IN THE CONDUIT.
3. INSTALLATION OF ELECTRICAL SERVICES SHALL BE COORDINATED WITH DOMINION ENERGY OF VIRGINIA (DE) OR NORTHERN VIRGINIA ELECTRIC COOPERATIVE (NOVEC), AS APPLICABLE.
4. NEW SERVICE PANEL IDs HAVE BEEN PROVIDED FOR REFERENCE ONLY. NEW SERVICE PANEL IDs SHALL BE COORDINATED WITH 95 EXPRESS LANES.
5. THE CONTRACTOR SHALL PROVIDE TERMINAL ADAPTERS TO TERMINATE CONDUCTORS GREATER THAN #2AWG ON CIRCUIT BREAKERS OR OTHER ELECTRICAL EQUIPMENT AS REQUIRED.

EROSION AND SEDIMENT CONTROL NOTES:

1. CONTRACTOR SHALL EXECUTE ALL EARTH WORK DURING DRY CONDITIONS.
2. THE CONTRACTOR SHALL STABILIZE ALL SURFACES DISTURBED BY EARTHWORK AT THE END OF EACH WORK SHIFT. IF THE CONTRACTOR'S MEANS AND METHODS DO NOT ALLOW FOR SAME WORK SHIFT STABILIZATION, THE CONTRACTOR SHALL PLACE APPROPRIATE E&S CONTROL MEASURES, SUCH AS SILT FENCE, AROUND THE DISTURBED AREA AS DIRECTED BY THE ENGINEER.

COMMONWEALTH OF VIRGINIA
JEFFREY D. CHENG
Lic. No. 051900
PROFESSIONAL ENGINEER

Jeffrey D Cheng
2022.07.20 15:06:37 -04'00'

Whitman, Requardt & Associates
Baltimore, Maryland
TRAFFIC ENGINEER

REVISED	STATE	STATE ROUTE	STATE PROJECT	SHEET NO.
	VA.	95	0095-076-299,C-501	15(1A)

DESIGN FEATURES RELATING TO CONSTRUCTION OR TO REGULATION AND CONTROL OF TRAFFIC MAY BE SUBJECT TO CHANGE AS DEEMED NECESSARY BY THE DEPARTMENT

AFC PLANS

	PROJECT	SHEET NO.
	0095-076-299	15(1A)

7/20/2022 4589300101501(1B).dgn
12:11:37 PM Plotted By: ntownsend

LIMITED ACCESS HIGHWAY By Resolution of the Highway Commission dated October 4, 1956.
By Resolution of the Highway Commission dated January 18, 1973.
By Resolution of the Commonwealth Transportation Board dated April 19, 2022

PROJECT MANAGER Rimpal Shah, P.E. (703) 259-2362 (NOVA District) _____
SURVEYED BY, DATE H&B Surveying and Mapping, LLC (804) 330-3781, 03/09/2021
DESIGN BY Whitman, Requardt & Associates, LLP (804) 212-8700 _____
SUBSURFACE UTILITY BY, DATE Accumark, Inc. (804) 550-7740, 07/07/2021

COMMONWEALTH OF VIRGINIA
JEFFREY D. CHENG
Lic. No. 051900
PROFESSIONAL ENGINEER

Jeffrey D Cheng
2022.07.20 15:07:19 -04'00'

Whitman, Requardt & Associates
Baltimore, Maryland
TRAFFIC ENGINEER

REVISED	STATE	STATE ROUTE	STATE PROJECT	SHEET NO.
	VA.	95	0095-076-299,C-501	15(1B)

DESIGN FEATURES RELATING TO CONSTRUCTION OR TO REGULATION AND CONTROL OF TRAFFIC MAY BE SUBJECT TO CHANGE AS DEEMED NECESSARY BY THE DEPARTMENT

TMS LEGEND

EXISTING	PROPOSED	DESCRIPTION
CC	CC	COMMUNICATION/CONTROL CONDUIT/DUCT BANK
P	P	EQUIPMENT POWER CONDUIT/DUCT BANK
CC/P	CC/P	COMMUNICATION AND POWER CONDUIT/DUCT BANK
		TRENCHED CONDUIT CROSS SECTION
		BORED CONDUIT CROSS SECTION
		STRUCTURE MOUNTED CONDUIT CROSS SECTION
G	G	GENERATOR
		JUNCTION BOX EMBEDDED IN OR ATTACHED TO STRUCTURE
		SERVICE PANEL
S	N/A	SPLICE PEDESTAL
		DETECTOR POLE
		50' POLE AND FOUNDATION
		40' POLE AND FOUNDATION
	N/A	EXISTING POLE
	N/A	TOLL GANTRY
		HORIZONTAL SWING GATE
N/A		VERTICAL SWING GATE
		EXPRESS LANES MICROWAVE VEHICLE DETECTOR
		EXPRESS LANES CCTV CAMERA
		EXPRESS LANES AID CAMERA
N/A	FIX	EXPRESS LANES FIXED CCTV CAMERA
X-DMS	X-DMS	EXPRESS LANES DYNAMIC MESSAGE SIGN
1 2	1 2	EXPRESS LANES ELECTRICAL JUNCTION BOX JB-R1 AND JB-R2
G	G	ELECTRICAL JUNCTION BOX FOR GATES
C	C	EXPRESS LANES COMMUNICATION/CONTROL CIRCULAR JUNCTION BOX
N/A	J	EXPRESS LANES LIGHTING JUNCTION BOX (JB-R2)
2	C	EXPRESS LANES POLE OR STRUCTURE MOUNTED CABINET
C1		EXPRESS LANES GROUND-MOUNTED EQUIPMENT CABINET ONE CABINET ON SINGLE FOUNDATION
C2		EXPRESS LANES GROUND-MOUNTED EQUIPMENT CABINET TWO CABINETS ON SINGLE FOUNDATION

EXISTING	PROPOSED	DESCRIPTION
		VDOT CCTV CAMERA
		VDOT MICROWAVE VEHICLE DETECTOR
	N/A	VDOT RADIO ANTENNA
1	V	VDOT POLE MOUNTED CABINET
P 1 2	2 1	VDOT ELECTRICAL JUNCTION BOX, JB-R1, OR JB-R2
N/A	J	VDOT LIGHTING JUNCTION BOX (JB-R2 UNLESS OTHERWISE NOTED)
M	N/A	VDOT MANHOLE
C	C	VDOT COMMUNICATION/CONTROL CIRCULAR JUNCTION BOX
C1	C1	VDOT GROUND-MOUNTED EQUIPMENT CABINET ONE CABINET ON SINGLE FOUNDATION
C2	N/A	VDOT GROUND-MOUNTED EQUIPMENT CABINET TWO CABINETS ON SINGLE FOUNDATION
C3	N/A	VDOT GROUND-MOUNTED EQUIPMENT CABINET THREE CABINETS ON SINGLE FOUNDATION

ACTION ITEM LEGEND

R EXISTING TMS EQUIPMENT TO BE REMOVED.

A EXISTING TMS CABLES TO BE REMOVED FROM CONDUIT AND CONDUIT TO BE ABANDONED.

AFC PLANS

	PROJECT	SHEET NO.
	0095-076-299	15(1B)

Cell Revised 12/1/12

LIMITED ACCESS HIGHWAY

By Resolution of the Highway Commission dated October 4, 1956.
By Resolution of the Highway Commission dated January 18, 1973.
By Resolution of the Commonwealth Transportation Board dated April 19, 2022

PROJECT MANAGER Rimpal Shah, P.E. (703) 259-2362 (NOVA District) _____
SURVEYED BY, DATE H&B Surveying and Mapping, LLC (804) 330-3781, 03/09/2021
DESIGN BY Whitman, Requardt, & Associates, LLP (804) 212-8700 _____
SUBSURFACE UTILITY BY, DATE Accutrack, Inc. (804) 550-7740, 07/07/2021

TMS EQUIPMENT SCHEDULES

	PROPOSED XPL CABINET SCHEDULE								EQUIPMENT QUANTITY					
ITEM NO.	STA.	OFFSET (FT)		SHEET NO.	OWNER	CABINET TYPE	CABINET ID	DISPOSITION	CCTV	MVD	DMS	GATES	AID	TELEMETRY
1	657+40	31.7	LT	15(4)	XPL	POLE MOUNT	C095HL1560A	PROPOSED					1	
2	664+74	43.0	LT	15(4)	XPL	POLE MOUNT	C095HL1561A	PROPOSED					1	
3	668+05	43.0	LT	15(4)	XPL	GROUND MOUNT	C095HL1561D	PROPOSED			1			
4	668+37	44.1	LT	15(5)	XPL	GROUND MOUNT	C095HL1561G	PROPOSED				9		
5	671+50	51.3	LT	15(5)	XPL	POLE MOUNT	C095HL1562A	PROPOSED					1	
6	677+10	34.9	RT	15(5)	XPL	GROUND MOUNT	C095HR1563D	PROPOSED			1			
7	686+14	42.9	LT	15(6)	XPL	GROUND MOUNT	C095HL1565G	PROPOSED				11	1	
8	686+45	191.8	LT	15(6)	XPL	RACK MOUNT	H118A GENERATOR COMM.	PROPOSED						1
9	694+20	52.7	LT	15(6)	XPL	GROUND MOUNT	C095HL1566D	PROPOSED			1		1	
10	697+32	40.1	LT	15(7)	XPL	POLE MOUNT	C095HL1566A	PROPOSED					1	
11	724+25	130.0	LT	15(9)	XPL	GROUND MOUNT	C095HL1572D	PROPOSED			1		1	
12	726+81	42.2	RT	15(9)	XPL	POLE MOUNT	C095HR1572C	PROPOSED	1	1				
13	728+74	185.9	RT	15(9)	XPL	GROUND MOUNT	C095NR1573D	PROPOSED			1			
14	732+03	39.3	RT	15(9)	XPL	GROUND MOUNT	C095HL1574A	PROPOSED					1	
15	736+90	189.7	RT	15(9)	XPL	RACK MOUNT	H117A GENERATOR COMM.	PROPOSED						1
16	62+25	71.0	RT	15(12)	XPL	GROUND MOUNT	C2000ER0001D	PROPOSED	1		1			
17	63+50	58.5	RT	15(12)	XPL	GROUND MOUNT	C2000ER0001G	PROPOSED	1			7	1	
18	71+22	52.3	LT	15(13)	XPL	GROUND MOUNT	C2000WR0001D	PROPOSED			1			
19	73+65	60.4	RT	15(13)	XPL	GROUND MOUNT	C2000ER0001C	PROPOSED	1					
								TOTAL	4	1	7	27	9	2

	EXISTING XPL CABINET SCHEDULE								EQUIPMENT QUANTITY					
ITEM NO.	STA.	OFFSET (FT)		SHEET NO.	OWNER	CABINET TYPE	CABINET ID	DISPOSITION	CCTV	MVD	DMS	GATES	AID	TELEMETRY
1	642+62	33.7	RT	15(3)	XPL	POLE MOUNT	C095HR1556C	EX. TO REMAIN	1					
2	653+59	42.6	RT	15(3)	XPL	POLE MOUNT	C095HR1559M	EX. TO REMAIN		1				
3	668+91	35.0	RT	15(5)	XPL	GROUND MOUNT	C095HR1562 (C)	EX. TO REMAIN	1	1	-1			
4	669+31	175.1	LT	15(5)	XPL	RACK MOUNT	H119 GENERATOR COMM.	EX. TO REMAIN						1
5	685+98	33.1	RT	15(6)	XPL	POLE MOUNT	C095HR1565C	EX. TO REMAIN	1	1				
6	702+44	397.0	LT	15(7)	XPL	RACK MOUNT	H118 GENERATOR COMM.	EX. TO REMAIN						1
7	702+48	37.9	RT	15(7)	XPL	POLE MOUNT	C095HR1568A	EX. TO REMAIN		1			1	
8	706+98	31.6	LT	15(7)	XPL	POLE MOUNT	C095HL1569C	EX. TO REMAIN	1				1	
9	712+27	42.6	LT	15(8)	XPL	GROUND MOUNT	C095HL1570G (A)	EX. TO REMAIN		1		-8	1	
10	724+53	26.2	LT	15(9)	XPL	POLE MOUNT	C095HL1572A	EX. TO BE REMOVED					-1	
11	729+02	31.0	LT	15(9)	XPL	GROUND MOUNT	C095HL1573G	EX. TO BE REMOVED	-1	-1		-7	-1	
12	729+85	183.4	RT	15(9)	XPL	GROUND MOUNT	C095XR1573D	EX. TO BE REMOVED			-1			
13	736+70	50.3	LT	15(9)	XPL	GROUND MOUNT	C095SL1575D	EX. TO BE REMOVED			-1			
14	739+51	54.0	LT	15(10)	XPL	POLE MOUNT	C095SL1575A (M)	EX. TO REMAIN		1			-1	
15	746+67	184.8	RT	15(10)	XPL	GROUND MOUNT	C095XR1576D	EX. TO REMAIN			1	4		
16	751+44	36.9	LT	15(10)	XPL	POLE MOUNT	C095HR1577C	EX. TO REMAIN	1	1				
17	751+77	159.7	LT	15(10)	XPL	RACK MOUNT	H117 GENERATOR COMM.	EX. TO REMAIN						1
18	755+67	223.9	RT	15(11)	XPL	POLE MOUNT	C095XR1578A	EX. TO REMAIN					1	
19	757+41	59.3	LT	15(11)	XPL	GROUND MOUNT	C095SL1578D	EX. TO BE REMOVED			-1			
20	760+73	37.1	LT	15(11)	XPL	GROUND MOUNT	C095SL1579D	EX. TO REMAIN			1			
21	735+08	334.3	RT	15(13)	XPL	GROUND MOUNT	C095XR1574D	EX. TO REMAIN			1			
22	770+02	31.1	LT	NOT SHOWN	XPL	POLE MOUNT	C095HR1581A	EX. TO REMAIN		1			2	

	PROPOSED VDOT CABINET SCHEDULE								EQUIPMENT QUANTITY		NOTES
ITEM NO.	STA.	OFFSET (FT)		SHEET NO.	OWNER	CABINET TYPE	CABINET ID	DISPOSITION	CCTV	MVD	
1	726+43	52.9	RT	15(9)	VDOT	GROUND MOUNT	NRO-CAB-I95-N-01572	PROPOSED	1		SEE NOTE 1.
2	727+13	133.6	LT	15(9)	VDOT	POLE MOUNT	NRO-CAB-I95-S-01572	PROPOSED		2	SEE NOTES 1 AND 2.
								TOTAL	1	2	

	EXISTING VDOT CABINET SCHEDULE								EQUIPMENT QUANTITY		NOTES
ITEM NO.	STA.	OFFSET (FT)		SHEET NO.	OWNER	CABINET TYPE	CABINET ID	DISPOSITION	CCTV	MVD	
1	654+10	186.0	LT	15(3)	VDOT	GROUND MOUNT	B132	EX. TO REMAIN		1	
2	656+44	32.0	RT	15(4)	VDOT	GROUND MOUNT	B139	EX. TO REMAIN			OLD DMS CABINET. CURRENTLY SERVES AS FIBER SPLICE THROUGH.
3	677+52	172.8	LT	15(5)	VDOT	GROUND MOUNT	B130	EX. TO REMAIN	1	1	
4	701+82	38.0	RT	15(7)	VDOT	GROUND MOUNT	B135	EX. TO REMAIN			OLD DETECTOR CABINET. CURRENTLY SERVES AS FIBER SPLICE THROUGH.
5	725+05	183.9	LT	15(9)	VDOT	GROUND MOUNT	B122	EX. TO REMAIN	1		
6	730+02	42.8	LT	15(9)	VDOT	POLE MOUNT	B131M	EX. TO BE REMOVED		-1	SURGE PROTECTION CABINET.
7	730+29	32.6	RT	15(9)	VDOT	GROUND MOUNT	B131	EX. TO BE REMOVED			OLD DMS AND DETECTOR CABINET. CURRENTLY SERVES AS FIBER SPLICE THROUGH.
8	738+50	45.0	RT	15(10)	VDOT	GROUND MOUNT	B127	EX. TO REMAIN			OLD DETECTOR CABINET. CURRENTLY SERVES AS FIBER SPLICE THROUGH.

COMMONWEALTH OF VIRGINIA
JEFFREY D. CHENG
Lic. No. 051900
PROFESSIONAL ENGINEER

Jeffrey D Cheng
2022.07.20 15:07:55 -04'00'
Whitman, Requardt & Associates
Baltimore, Maryland
TRAFFIC ENGINEER

REVISED	STATE	STATE ROUTE	STATE PROJECT	SHEET NO.
	VA.	95	0095-076-299,C-501	15(IC)

DESIGN FEATURES RELATING TO CONSTRUCTION OR TO REGULATION AND CONTROL OF TRAFFIC MAY BE SUBJECT TO CHANGE AS DEEMED NECESSARY BY THE DEPARTMENT

NOTES:

1. ALL PROPOSED VDOT TMS CABINETS SHALL BE PROVIDED WITH MEDECO XT ELECTRONIC TRAFFIC CABINET LOCKS, AS APPROVED BY VDOT
2. VDOT CCTV CAMERAS SHALL BE COHU RISE SERIES 4220HD.

AFC PLANS

PROJECT	SHEET NO.
0095-076-299	15(IC)

Cell Revised 12/1/12

7/18/2022 4589300101S(02A1).dgn
7:19:03 PM Plotted By: kfisher

LIMITED ACCESS HIGHWAY By Resolution of the Highway Commission dated October 4, 1956.
By Resolution of the Highway Commission dated January 18, 1973.
By Resolution of the Commonwealth Transportation Board dated April 19, 2022

PROJECT MANAGER: Rimpal Shah, P.E. (703) 259-2362 (NOVA District) _____
SURVEYED BY, DATE: H&B Surveying and Mapping, LLC (804) 330-3781, 03/09/2021
DESIGN BY: Whitman, Requardt, & Associates, LLP (804) 212-8700 _____
SUBSURFACE UTILITY BY, DATE: Accumark, Inc. (804) 550-7740, 07/07/2021

REVISED	STATE	STATE ROUTE	STATE PROJECT	SHEET NO.
	VA.	95	0095-076-299,C-501	15(2A1)

COMMONWEALTH OF VIRGINIA
JEFFREY D. CHENG
Lic. No. 051900
PROFESSIONAL ENGINEER

Jeffrey D Cheng
2022.07.20 15:08:30 -04'00'
Whitman, Requardt & Associates
Baltimore, Maryland
TRAFFIC ENGINEER

DESIGN FEATURES RELATING TO CONSTRUCTION OR TO REGULATION AND CONTROL OF TRAFFIC MAY BE SUBJECT TO CHANGE AS DEEMED NECESSARY BY THE DEPARTMENT

CCTV AND AID CAMERA POLE DETAILS

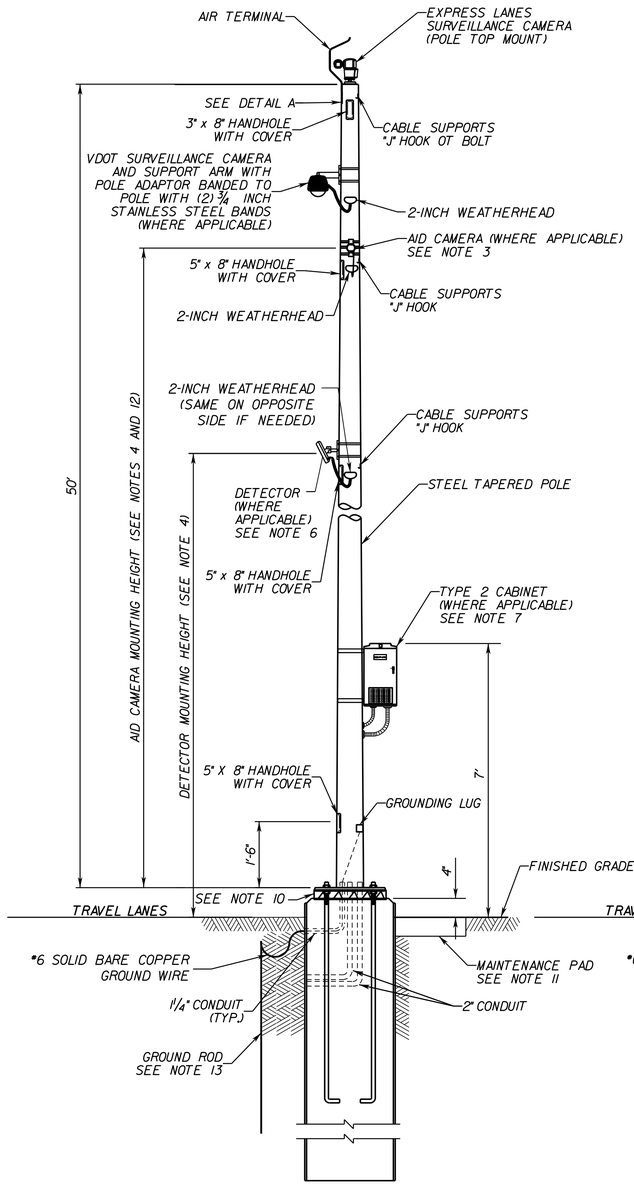

TYPICAL 50' CCTV CAMERA POLE
NTS

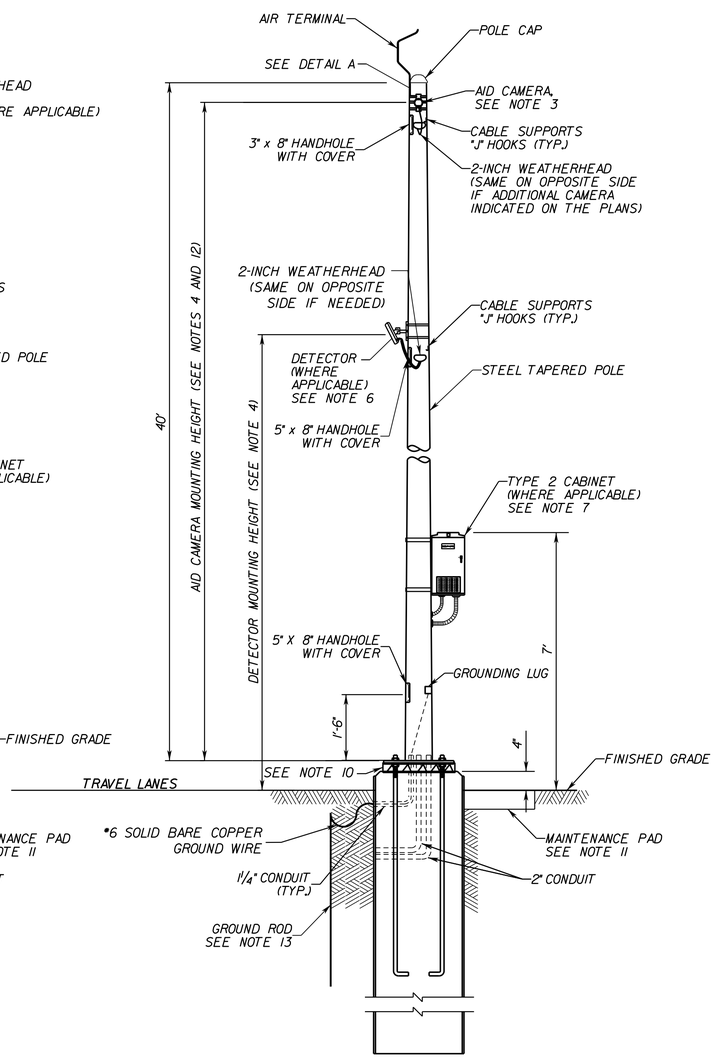

TYPICAL 40' AID CAMERA POLE
NTS

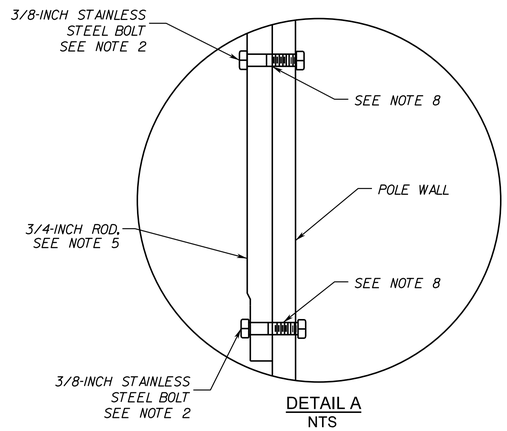

DETAIL A
NTS

NOTES:

1. ALL CONDUITS AND ANCHOR BOLTS SHALL BE RIGIDLY INSTALLED BEFORE THE CONCRETE IS PLACED. THE TOP OF THE CONDUITS SHALL BE FLUSH WITH THE TOP OF THE ANCHOR BOLTS AND THE CONDUITS SHALL BE CENTERED IN THE CENTER OF TEH FOUNDATION.
2. STAINLESS STEEL BOLTS SHALL CONFORM TO ASTM A193, GRADE B5, B6, B7, OR B16. NUTS SHALL BE COMPATIBLE AND CONFORM TO ASTM A194, SELF-LOCKING.
3. SEE CCTV AND AID CAMERA MOUNTING DETAILS ON SHEET 15(2A2) FOR EQUIPMENT INSTALLATION DETAILS.
4. SEE ITS EQUIPMENT CROSS SECTION DRAWINGS FOR EQUIPMENT MOUNTING HEIGHTS.
5. PROVIDE A SOLID COPPER AIR TERMINAL, 0.75 INCHES IN DIAMETER. THE LENGTH OF THE AIR TERMINAL SHALL BE SUCH THAT IT PROJECTS 5 FEET ABOVE THE TOP OF THE CAMERA. AIR TERMINAL SHALL BE ATTACHED WITH TWO BOLTS.
6. SEE DETECTOR MOUNTING DETAILS ON SHEET 15(2A3).
7. CABINETS ARE NOT REQUIRED AT ALL LOCATIONS. TYPE 2 CABINET SHALL BE INSTALLED AS SHOWN ON SHEET 15(2A5).
8. AT THE POINTS WHERE THE ROD BOLTS TO THE POLE, USE A CONDUCTIVE JOINT COMPOUND TO MINIMIZE GALVANIC CORROSION OF THE DISSIMILAR METALS.
9. POLE AND FOUNDATION SHALL BE DESIGNED BY THE CONTRACTOR TO CONFORM TO THE REQUIREMENTS OF THESE DETAILS AND SPECIAL PROVISIONS.
10. FURNISH AND INSTALL SCREEN IN ACCORDANCE WITH VDOT ROAD AND BRIDGE SPECIFICATIONS 2016 VS-1 1302.60 TO PREVENT RODENT ENTRY AT THE BASE OF ALL TTMS POLES.
11. FOR CABINETS FACING A 2:1 OR STEEPER DOWNSLOPE, INSTALL MINIMUM 3' x 3' x 4" CONCRETE PAD ADJACENT TO EACH CABINET DOOR FOR MAINTENANCE PERSONNEL TO STAND WHEN ACCESSING ITS CABINETS.
12. AID CAMERA MOUNTING HEIGHT MEASURED FROM BOTTOM OF POLE.
13. GROUND ROD SHALL BE BURIED AT LEAST 6" BELOW FINISHED GRADE.
14. POLE SHALL BE PROTECTED AS SHOWN ON THE PLANS.
15. EACH FOUNDATION SHALL BE PERMANENTLY MARKED TO INDICATE ALL SIDES FROM WHICH CONDUITS PASS. THIS MARK SHALL BE MADE WITH A TROWEL WHEN FINISHING THE CONCRETE AND SHALL BE 1/4" DEEP AND 4" TO 6" LONG. LOCATIONS OF EMPTY CONDUITS SHALL HAVE AN ADDITIONAL 2" LONG MARK MADE PERPENDICULAR TO AND CENTERED ON THIS MARKING.

AFC PLANS

N.T.S.	PROJECT 0095-076-299	SHEET NO. 15(2A1)

Cell Revised 12/11/12

7/18/2022 4589300101S(02A2).dgn
7:9:05 PM Plotted By: kfisher

LIMITED ACCESS HIGHWAY

By Resolution of the Highway Commission dated October 4, 1956.
By Resolution of the Highway Commission dated January 18, 1973.
By Resolution of the Commonwealth Transportation Board dated April 19, 2022

PROJECT MANAGER: Rimpal Shah, P.E. (703) 259-2362 (NOVA District) _____
SURVEYED BY, DATE: H&B Surveying and Mapping, LLC (804) 330-3781, 03/09/2021
DESIGN BY: Whitman, Requardt, & Associates, LLP (804) 212-8700 _____.
SUBSURFACE UTILITY BY, DATE: Accumark, Inc. (804) 550-7740, 07/07/2021

COMMONWEALTH OF VIRGINIA
JEFFREY D. CHENG
Lic. No. 051900
PROFESSIONAL ENGINEER

Jeffrey D Cheng
2022.07.20 15:08:57 -04'00'

Whitman, Requardt & Associates
Baltimore, Maryland
TRAFFIC ENGINEER

REVISED	STATE	STATE ROUTE	STATE PROJECT	SHEET NO.
	VA.	95	0095-076-299,C-501	15(2A2)

DESIGN FEATURES RELATING TO CONSTRUCTION OR TO REGULATION AND CONTROL OF TRAFFIC MAY BE SUBJECT TO CHANGE AS DEEMED NECESSARY BY THE DEPARTMENT

CCTV AND AID CAMERA MOUNTING DETAILS

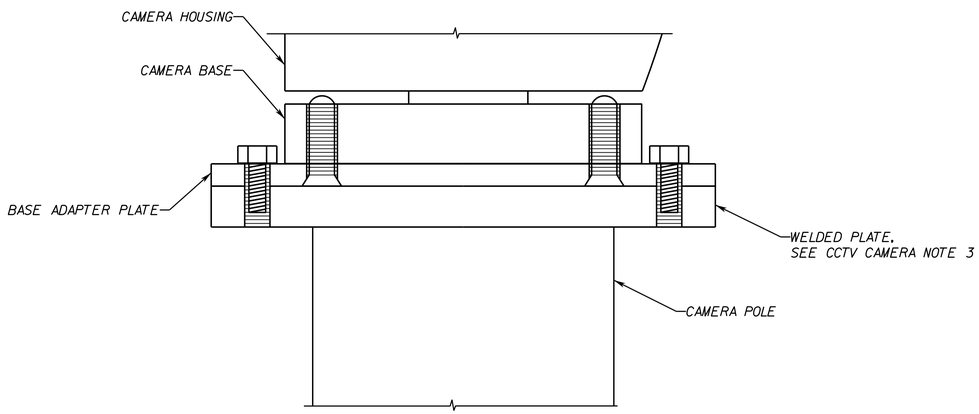

CCTV CAMERA INSTALLATION ON CAMERA POLE
NTS

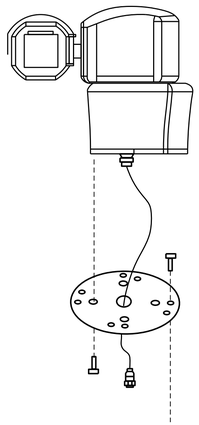

CCTV CAMERA INSTALLATION ON BASE ADAPTER PLATE
NTS

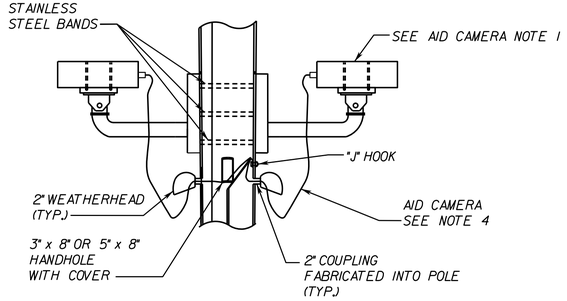

AID CAMERA MOUNTING DETAIL
NTS

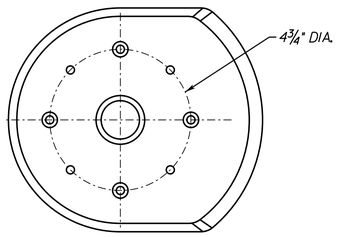

CCTV CAMERA BASE DETAIL
NTS

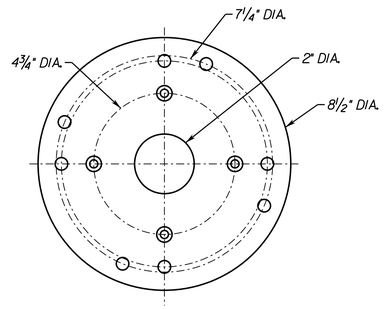

CCTV CAMERA BASE ADAPTER PLATE DETAIL
NTS

AID CAMERA NOTES:

1. AID CAMERAS SHALL BE COHU 3430HD SERIES FIXED BARREL.
2. AID CAMERAS SHALL BE INSTALLED PER VERTICAL POLE MOUNT INSTALLATION RECOMMENDED BY THE MANUFACTURER.
3. AID CAMERA SHALL BE MOUNTED ABOVE WEATHERHEAD.
4. DRIP LOOP SHALL BE MAINTAINED AT ALL TIMES.

CCTV CAMERA NOTES:

1. CCTV CAMERAS SHALL BE COHU HD COSTAR 4260HD RISE 4260 SERIES POSITIONER.
2. FOUR-HOLE PATTERN BASE ADAPTER PLATE SHALL BE USED TO INSTALL CCTV AT THE TOP OF CAMERA POLE. CAMERA SHALL BE DIRECTLY ATTACHED TO BASE ADAPTER PLATE WITH MANUFACTURER SUGGESTED HARDWARE AND INSTALLATION RECOMMENDATIONS.
3. CONTRACTOR TO COORDINATE CCTV BASE ADAPTER PLATE SIZING AND INSTALLATION WITH CCTV MANUFACTURER.

AFC PLANS

N.T.S.	PROJECT 0095-076-299	SHEET NO. 15(2A2)

Cell Revised 12/11/12

7/18/2022 4589300101S(02A3).dgn
7:9:06 PM Plotted By: kfisher

LIMITED ACCESS HIGHWAY

By Resolution of the Highway Commission dated October 4, 1956.
By Resolution of the Highway Commission dated January 18, 1973.
By Resolution of the Commonwealth Transportation Board dated April 19, 2022

PROJECT MANAGER: Rimpal Shah, P.E. (703) 259-2362 (NOVA District) _____
SURVEYED BY, DATE: H&B Surveying and Mapping, LLC (804) 330-3781, 03/09/2021
DESIGN BY: Whitman, Requardt, & Associates, LLP (804) 212-8700 _____
SUBSURFACE UTILITY BY, DATE: Accumark, Inc. (804) 550-7740, 07/07/2021

VEHICLE DETECTOR AND DMS MESSAGE VERIFICATION CAMERA POLE DETAILS

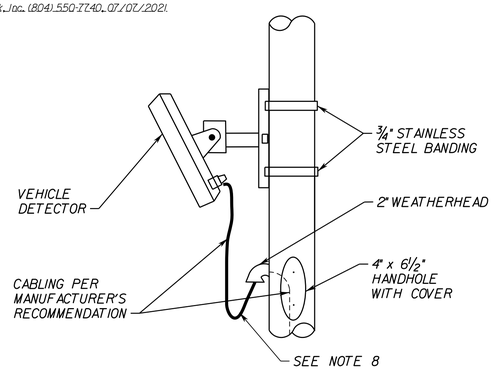

DETECTOR MOUNTING DETAIL

NTS

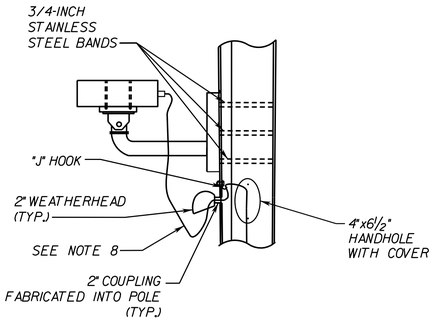

DMS MESSAGE VERIFICATION CAMERA MOUNTING DETAIL

NTS

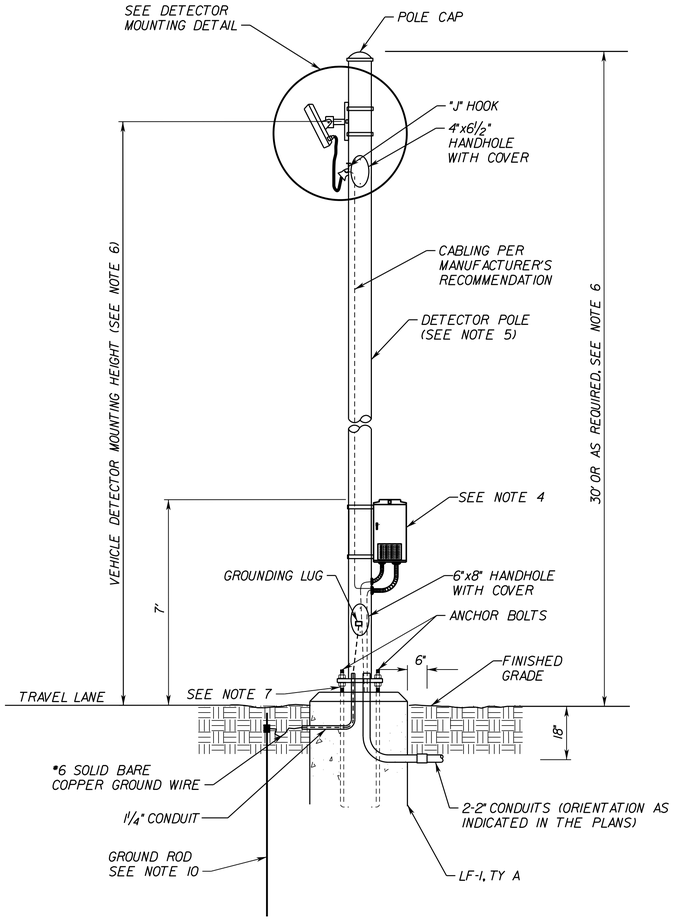

VEHICLE DETECTOR ON DEDICATED GROUND MOUNTED POLE

NTS

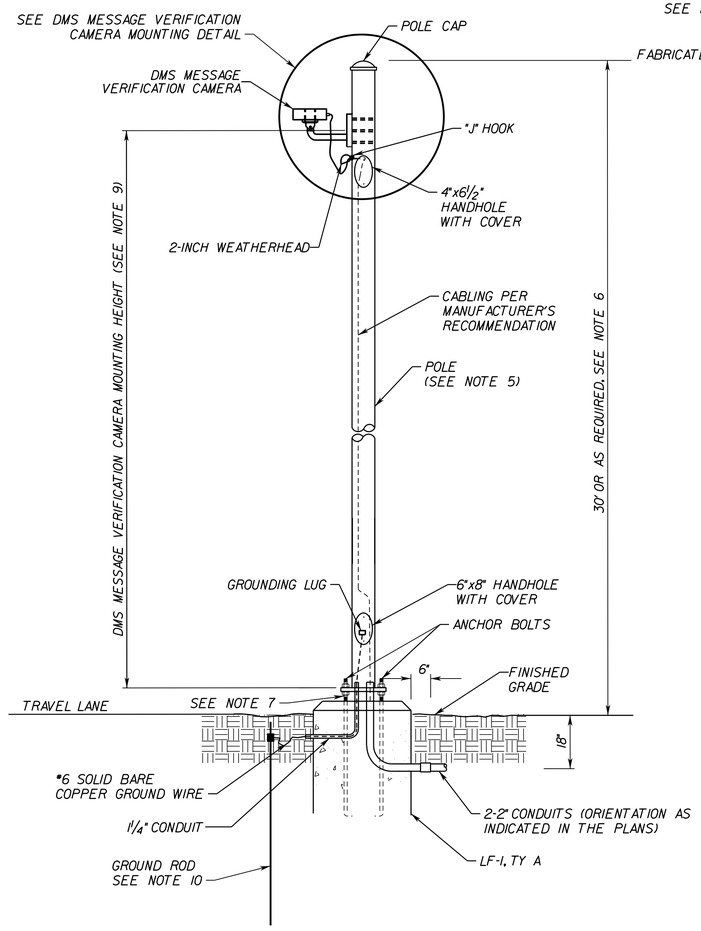

DMS MESSAGE VERIFICATION CAMERA ON DEDICATED GROUND MOUNTED POLE

NTS

NOTES:

1. POLE SHALL BE PROTECTED AS SHOWN ON THE PLANS.
2. EACH FOUNDATION SHALL BE PERMANENTLY MARKED TO INDICATE ALL SIDES FROM WHICH CONDUITS PASS. THIS MARK SHALL BE MADE WITH A TROWEL WHEN FINISHING THE CONCRETE AND SHALL BE ¼" DEEP AND 4" TO 6" LONG. LOCATIONS OF EMPTY CONDUITS SHALL HAVE AN ADDITIONAL 2" LONG MARK MADE PERPENDICULAR TO AND CENTERED ON THIS MARKING.
3. ALL CONNECTORS, BANDING AND MISCELLANEOUS EQUIPMENT SHALL BE STAINLESS STEEL.
4. SEE PLANS FOR CABINET TYPE. CABINETS ARE NOT REQUIRED AT ALL LOCATIONS. FOR TYPE 2 CABINET, INSTALL 3" COMMUNICATION AND 2" POWER FLEXIBLE METAL CONDUITS. FOR TYPE 1 CABINET, INSTALL 2" FLEXIBLE METAL CONDUIT. SEE ITS CROSS SECTIONS FOR EQUIPMENT MOUNTING HEIGHTS, AND CABINET ORIENTATION.
5. POLE SHALL MEET THE REQUIREMENTS OF VDOT STANDARD LP-2 WITH FOLLOWING EXCEPTIONS:
   - 2" CONDUIT COUPLING THROUGH WALL, WELDED TO POLE WALL ALL THE WAY AROUND. PROVIDE REMOVABLE PLUG IF NOT USED.
   - WEATHERHEAD 5' FROM TOP
   - HANDHOLE 5' FROM TOP
   - POLE CAP
6. SEE ITS CROSS SECTIONS FOR POLE HEIGHTS AND DETECTOR MOUNTING HEIGHTS.
7. FURNISH AND INSTALL SCREEN IN ACCORDANCE WITH VDOT ROAD AND BRIDGE SPECIFICATIONS 2016 VS-1 1302.60 TO PREVENT RODENT ENTRY AT THE BASE OF ALL TTMS POLES.
8. DRIP LOOP SHALL BE MAINTAINED AT ALL TIMES.
9. DMS MESSAGE VERIFICATION CAMERA MOUNTING HEIGHT MEASURED FROM BOTTOM OF POLE.
10. GROUND ROD SHALL BE BURIED AT LEAST 6" BELOW FINISHED GRADE.

AFC PLANS

COMMONWEALTH OF VIRGINIA
JEFFREY D. CHENG
Lic. No. 051900
PROFESSIONAL ENGINEER

Jeffrey D Cheng
2022.07.20 15:09:22 -04'00'

Whitman, Requardt & Associates
Baltimore, Maryland
TRAFFIC ENGINEER

REVISED	STATE	STATE ROUTE	STATE PROJECT	SHEET NO.
	VA.	95	0095-076-299,C-501	15(2A3)

DESIGN FEATURES RELATING TO CONSTRUCTION OR TO REGULATION AND CONTROL OF TRAFFIC MAY BE SUBJECT TO CHANGE AS DEEMED NECESSARY BY THE DEPARTMENT

N.T.S.	PROJECT 0095-076-299	SHEET NO. 15(2A3)

Cell Revised 12/11/12

7/18/2022 4589300101S(02A4).dgn
7:19:20 PM Plotted By: kfisher

LIMITED ACCESS HIGHWAY By Resolution of the Highway Commission dated October 4, 1956.
By Resolution of the Highway Commission dated January 18, 1973.
By Resolution of the Commonwealth Transportation Board dated April 19, 2022

PROJECT MANAGER Rimpal Shah, P.E. (703) 259-2362 (NOVA District) _____
SURVEYED BY, DATE B&B Surveying and Mapping, LLC (804) 330-3781, 03/09/2021
DESIGN BY Whitman, Requardt, & Associates, LLP (804) 212-8700 _____
SUBSURFACE UTILITY BY, DATE Accumark, Inc. (804) 550-7740, 07/07/2021

GROUND MOUNTED CABINET FOUNDATION DETAILS

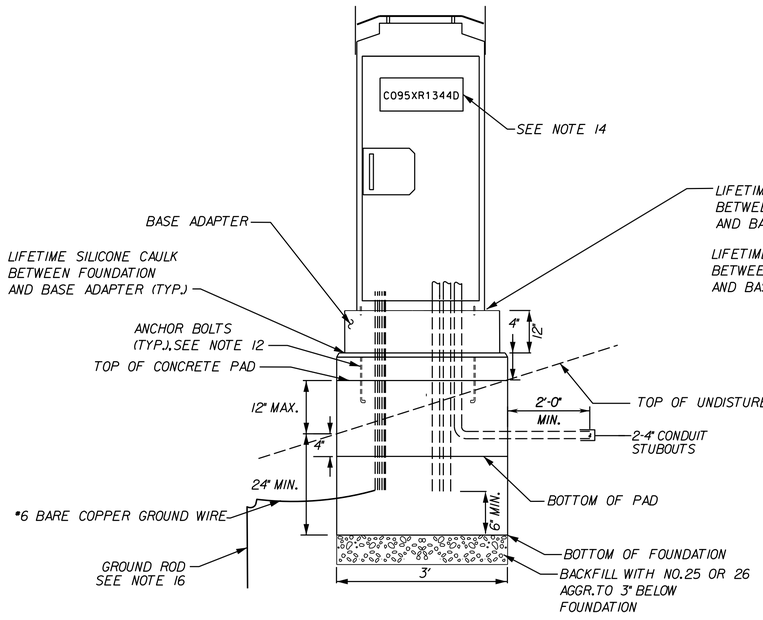

GROUND MOUNTED CABINET DETAIL - SINGLE CABINET
FRONT VIEW
NTS

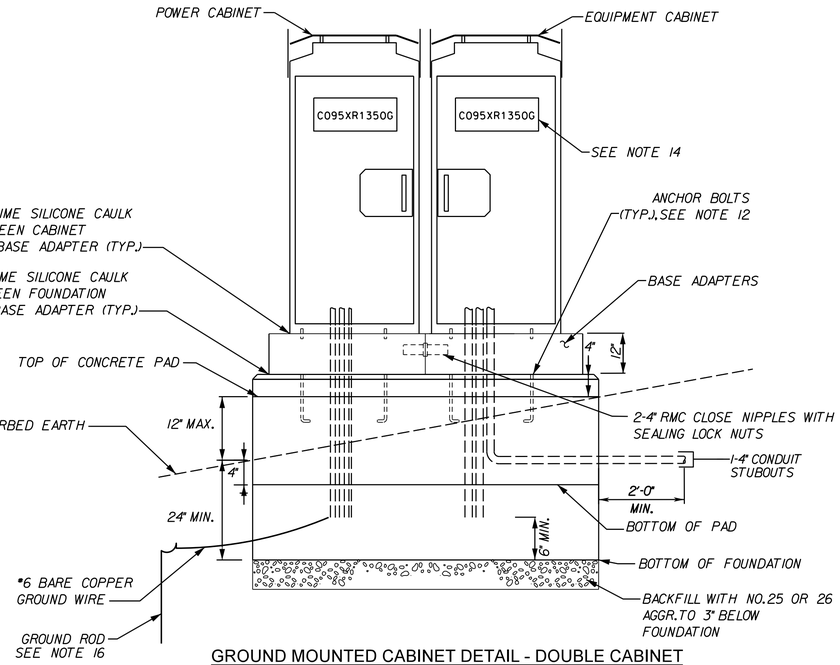

GROUND MOUNTED CABINET DETAIL - DOUBLE CABINET
FRONT VIEW
NTS

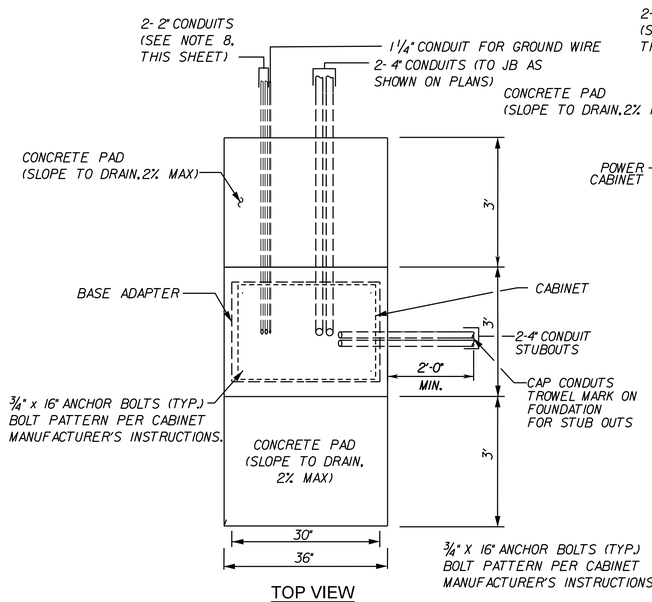

TOP VIEW
NTS

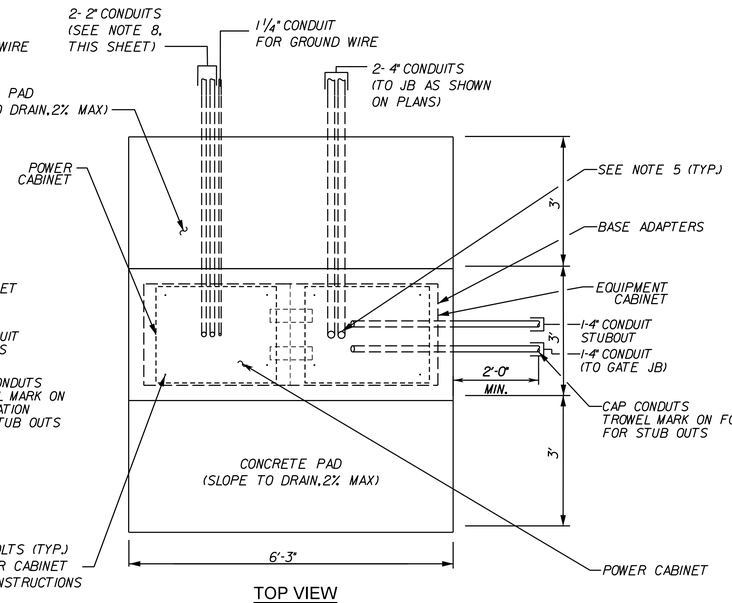

TOP VIEW
NTS

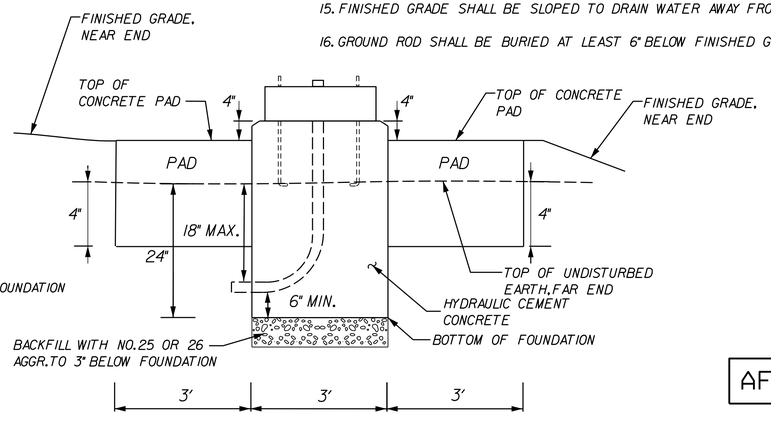

END VIEW LOOKING DOWNHILL
NTS

FOUNDATION NOTES:

1. ALL EXPOSED CONCRETE SURFACE EDGES SHALL BE CHAMFERED 3/4 INCHES.
2. ANCHOR BOLTS AND BOLT TEMPLATE SHALL BE FURNISHED WITH THE CABINET.
3. THE CABINETS AND BASE ADAPTERS SHALL BE SEALED WITH A SILICONE CAULK WHERE THEY MATE WITH EACH OTHER OR CONCRETE.
4. BELL ENDS SHALL BE INSTALLED ON THE END OF PVC CONDUITS. GROUNDING BUSHINGS SHALL BE INSTALLED ON THE END OF METAL CONDUITS.
5. TYPICAL FOR ALL CONDUIT ENTRIES INTO CABINETS: A) CAP SPARE CONDUITS. B) FURNISH AND INSTALL COPPER WOOL AND DUCT SEAL AROUND CABLES TO PREVENT MOISTURE AND RODENT ENTRY AT ALL CONDUITS ENTERING THE CABINET.
6. TWO 1/2 INCH DIAMETER WEEPHOLES SHALL BE PROVIDED IN THE FOUNDATION AND LOCATED 2 INCHES INSIDE OF THE BACK OR SIDE EDGES OF THE BASE ADAPTER. WEEPHOLES SHALL BE SLOPED TO ALLOW THE OUTLET TO EXIT 3 INCHES BELOW THE TOP OF FOUNDATION. TWO INCHES OF THE OUTLET SHALL BE FIBER FILLED.
7. SEE ITS CROSS SECTIONS FOR CABINET ORIENTATION AND LOCATION.
8. TWO 2" CONDUITS UNLESS MORE ARE SHOWN ON THE PLANS.
9. NO CONCRETE PAD IS REQUIRED IF CABINET IS INSTALLED ON A CAPPED MEDIAN.
10. CONTRACTOR SHALL STUB OUT CONDUITS A MINIMUM OF 24 INCHES FROM THE EDGE OF THE FOUNDATION OR PAD. DIRECTION OF STUB OUTS SHALL BE DETERMINED IN THE FIELD. STUB OUTS SHALL BE IN DIRECTION THAT ALLOWS FOR FUTURE ACCESS BASED ON CURRENT SITE CONDITIONS. PROVIDE 2 1/2" TROWEL MARKS IN FOUNDATION/PAD INDICATING DIRECTION OF STUB OUTS.
11. DOUBLE CABINETS SHALL ONLY BE PROVIDED FOR THE GATE CONTROLLER CABINET. ALL OTHER GROUND-MOUNTED CABINETS SHALL BE A SINGLE CABINET.
12. ANCHOR BOLTS TO BE CAST IN PLACE PER MANUFACTURER'S INSTRUCTIONS. THE CONTRACTOR MAY USE AN EPOXY ANCHOR BOLT SYSTEM WHERE FIELD DRILL IS PERMITTED ON THE CONCRETE FOUNDATION. IF USED, THE EPOXY SHALL MEET THE CONSTRUCTION GRADE AS APPROVED BY THE ENGINEER.
13. PROVIDE FALL PROTECTION CONSISTING OF GALVANIZED METAL HAND RAILS AND STAIRS AS INDICATED ON ITS CROSS SECTION DRAWINGS.
14. SEE PLANS FOR CABINET IDs.
15. FINISHED GRADE SHALL BE SLOPED TO DRAIN WATER AWAY FROM PAD.
16. GROUND ROD SHALL BE BURIED AT LEAST 6" BELOW FINISHED GRADE.

COMMONWEALTH OF VIRGINIA
JEFFREY D. CHENG
Lic. No. 051900
PROFESSIONAL ENGINEER

Jeffrey D Cheng
2022.07.20 15:09:52 -04'00'

Whitman, Requardt & Associates
Baltimore, Maryland
TRAFFIC ENGINEER

REVISED	STATE	STATE ROUTE	STATE PROJECT	SHEET NO.
	VA.	95	0095-076-299,C-501	15(2A4)

DESIGN FEATURES RELATING TO CONSTRUCTION OR TO REGULATION AND CONTROL OF TRAFFIC MAY BE SUBJECT TO CHANGE AS DEEMED NECESSARY BY THE DEPARTMENT

AFC PLANS

N.T.S.	PROJECT 0095-076-299	SHEET NO. 15(2A4)

Cell Revised 12/11/12

7/18/2022 4589300101S(02A5).dgn
7:19:22 PM Plotted By: kfisher

LIMITED ACCESS HIGHWAY

By Resolution of the Highway Commission dated October 4, 1956.
By Resolution of the Highway Commission dated January 18, 1973.
By Resolution of the Commonwealth Transportation Board dated April 19, 2022

PROJECT MANAGER Rimpal Shah, P.E. (703) 259-2362 (NOVA District) _____
SURVEYED BY, DATE B&B Surveying and Mapping, LLC (804) 330-3781, 03/09/2021
DESIGN BY Whitman, Requardt, & Associates, LLP (804) 212-8700 _____.
SUBSURFACE UTILITY BY, DATE Accumark, Inc. (804) 550-7740, 07/07/2021

POLE MOUNTED CABINET DETAIL

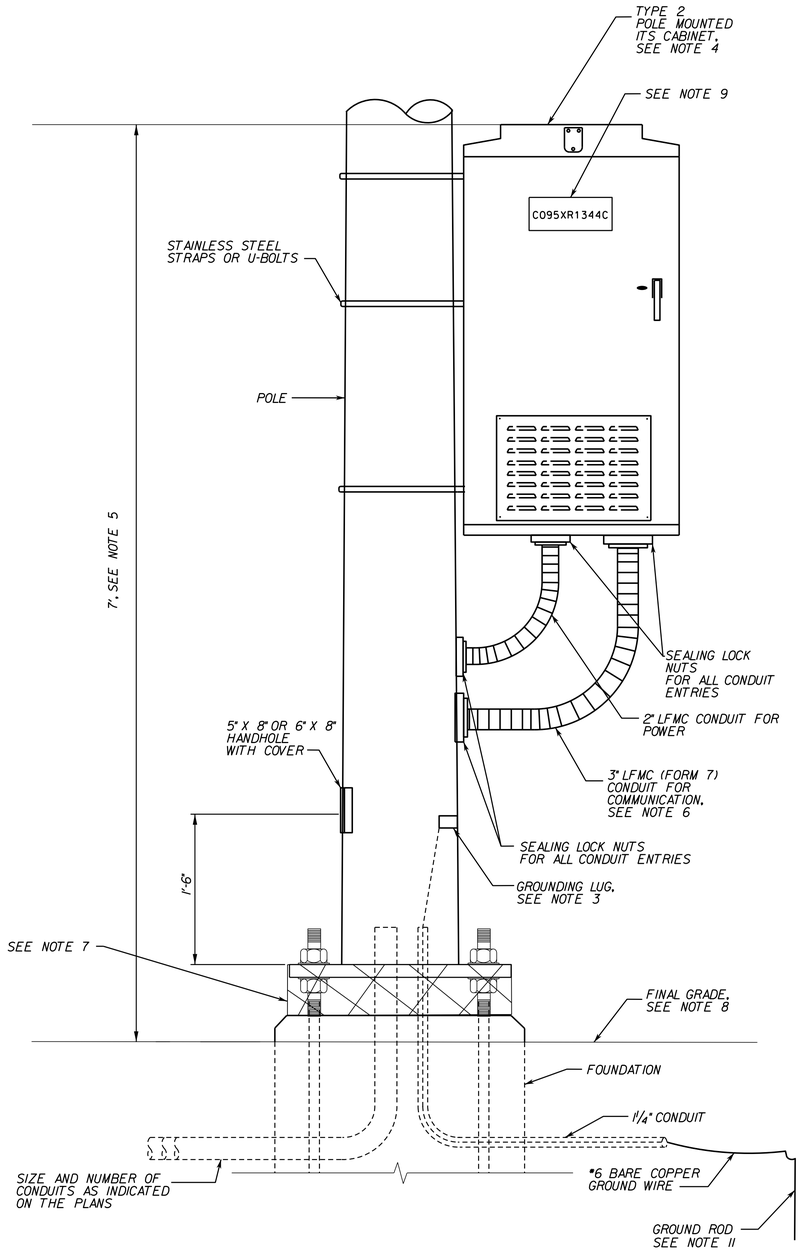

POLE MOUNTED CABINET FRONT VIEW
NTS

NOTES:

1. ALL EXPOSED CONCRETE SURFACE EDGES SHALL BE CHAMFERED ¾ INCHES.
2. A BELL END SHALL BE INSTALLED ON THE END OF PVC CONDUIT.
3. BONDING WIRE SHALL RUN FROM GROUNDING LUG IN THE POLE TO GROUND BUS IN A CABINET.
4. SEE ITS CROSS SECTIONS FOR CABINET ORIENTATION.
5. CABINET HEIGHT SHALL NOT BE MORE THAN 84" ABOVE THE FINISHED GRADE OF THE MAINTENANCE WORKSPACE.
6. MAINTAIN BENDING RADIUS AS REQUIRED FOR FIBER OPTIC CABLES.
7. FURNISH AND INSTALL SCREEN IN ACCORDANCE WITH VDOT ROAD AND BRIDGE SPECIFICATIONS 2016 VS-1 1302.60 TO PREVENT RODENT ENTRY AT THE BASE OF ALL TTMS POLES.
8. A MINIMUM 3' x 3' FLAT WORK AREA SHALL BE PROVIDED IMMEDIATELY ADJACENT TO CABINET DOOR FOR MAINTENANCE PERSONNEL TO STAND WHEN ACCESSING ALL CABINETS. IF CABINET IS FACING 2:1 OR STEEPER DOWNSLOPE, INSTALL 3' x 3' x 4" CONCRETE PAD ADJACENT TO EACH CABINET DOOR FOR MAINTENANCE PERSONNEL TO STAND WHEN ACCESSING ITS CABINETS.
9. SEE PLANS FOR CABINET ID'S.
10. TYPICAL FOR ALL CONDUIT ENTRIES INTO CABINETS: A) CAP SPARE CONDUIT. B) FURNISH AND INSTALL COPPER WOOL AND DUCT SEAL AROUND CABLES TO PREVENT MOISTURE AND RODENT ENTRY AT ALL CONDUIT ENTERING THE CABINET.
11. GROUND ROD SHALL BE BURIED AT LEAST 6" BELOW FINISHED GRADE.

COMMONWEALTH OF VIRGINIA
JEFFREY D. CHENG
Lic. No. 051900
PROFESSIONAL ENGINEER

Jeffrey D Cheng
2022.07.20 15:10:17 -04'00'

Whitman, Requardt & Associates
Baltimore, Maryland
TRAFFIC ENGINEER

REVISED	STATE	STATE ROUTE	STATE PROJECT	SHEET NO.
	VA.	95	0095-076-299,C-501	15(2A5)

DESIGN FEATURES RELATING TO CONSTRUCTION OR TO REGULATION AND CONTROL OF TRAFFIC MAY BE SUBJECT TO CHANGE AS DEEMED NECESSARY BY THE DEPARTMENT

AFC PLANS

N.T.S.	PROJECT 0095-076-299	SHEET NO. 15(2A5)

7/18/2022 4589300101S(02A6).dgn
7:19:23 PM Plotted By: kfisher

LIMITED ACCESS HIGHWAY By Resolution of the Highway Commission dated October 4, 1956.
By Resolution of the Highway Commission dated January 18, 1973.
By Resolution of the Commonwealth Transportation Board dated April 19, 2022

PROJECT MANAGER Rimpal Shah, P.E. (703) 259-2362 (NOVA District) _____
SURVEYED BY, DATE H&B Surveying and Mapping, LLC (804) 330-3781, 03/09/2021
DESIGN BY Whitman, Requardt, & Associates, LLP (804) 212-8700 _____.
SUBSURFACE UTILITY BY, DATE Accumark, Inc. (804) 550-7740, 07/07/2021

CIRCULAR JUNCTION BOX DETAIL

COMMONWEALTH OF VIRGINIA
JEFFREY D. CHENG
Lic. No. 051900
PROFESSIONAL ENGINEER

Jeffrey D Cheng
2022.07.20 15:10:44 -04'00'

Whitman, Requardt & Associates
Baltimore, Maryland
TRAFFIC ENGINEER

REVISED	STATE	STATE ROUTE	STATE PROJECT	SHEET NO.
	VA.	95	0095-076-299,C-501	15(2A6)

DESIGN FEATURES RELATING TO CONSTRUCTION OR TO REGULATION AND CONTROL OF TRAFFIC MAY BE SUBJECT TO CHANGE AS DEEMED NECESSARY BY THE DEPARTMENT

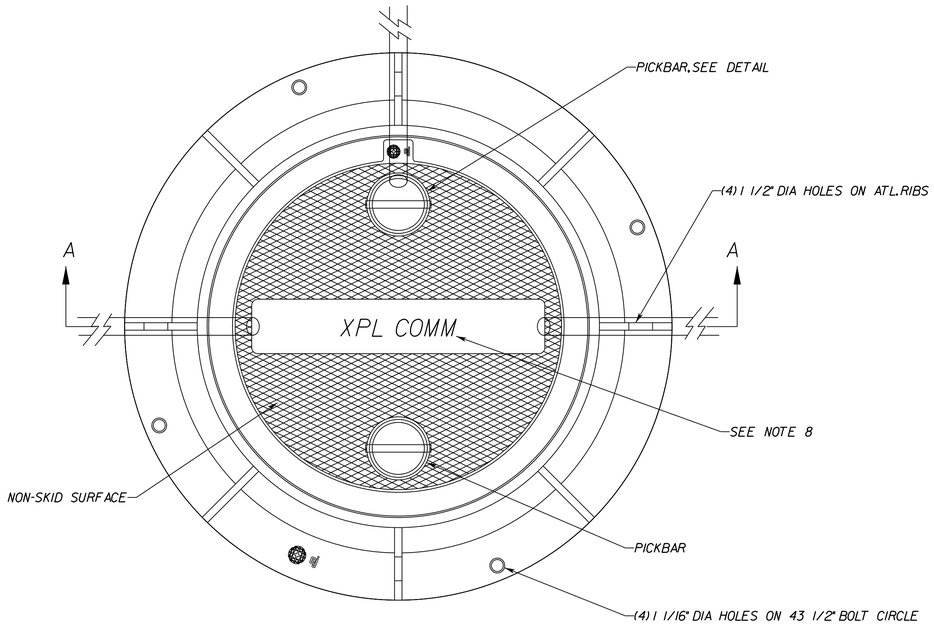

CIRCULAR JUNCTION BOX DETAIL - PLAN VIEW
NTS

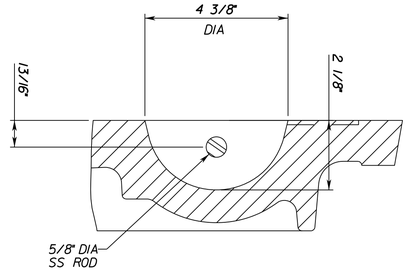

PICKBAR DETAIL
NTS

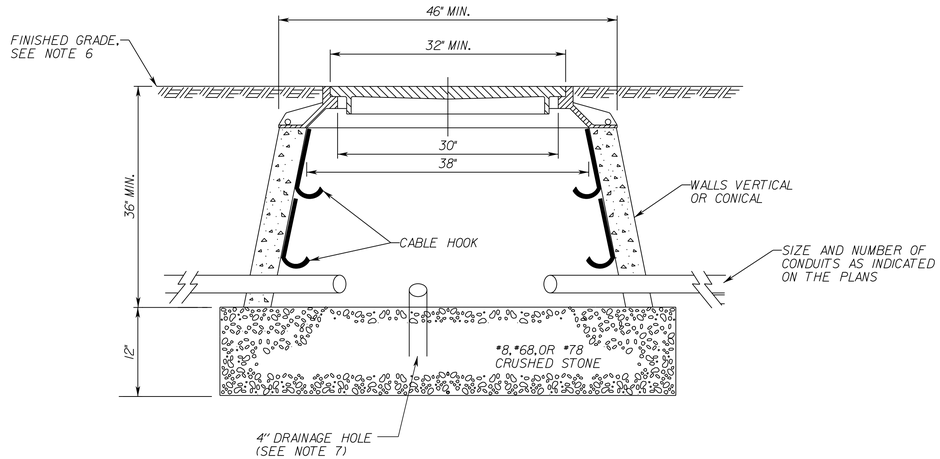

SECTION A-A
NTS

CIRCULAR JUNCTION BOX NOTES:

1. BOX SHALL BE PRECAST MADE OF 4000 PSI CONCRETE WITH STEEL REINFORCING. THE BOX MUST HAVE AN AASHTO H-20 RATING.
2. LID SHALL BE DESIGNED TO FACILITATE REMOVAL USING A PICKBAR
3. PROVIDE FOUR PAIRS OF CABLE HOOKS, EQUALLY SPACED. EACH HOOK SHALL HAVE A 3" THROAT OPENING, BE AT LEAST 3" WIDE, HAVE ROUNDED EDGES, HAVE CAPACITY FOR 10-5/8" DIAMETER CABLES (WITHOUT CABLE TIES), SUPPORT AT LEAST 220 LBS, BE MADE OF NON-CORROSIVE MATERIAL, AND BE BOLTED OR OTHERWISE PERMANENTLY ATTACHED TO THE WALL OF THE BOX.
4. DEEPEN TRENCH IN VICINITY OF BOX, SO THAT ALL CONDUITS ARE 30" BELOW GRADE AT BOX. ADJUST TRENCH DEPTH UNIFORMLY OVER A DISTANCE OF AT LEAST 20 FEET.
5. GRADE AREA AROUND BOX SUCH THAT RUNOFF IS DIRECTED AWAY FROM THE BOX.
6. FOR COMMUNICATION JUNCTION BOXES LOCATED ON SLOPES 2:1 OR STEEPER, AND LOCATED MORE THAN 2 FEET IN ELEVATION ABOVE THE TOE OF SLOPE, 3' x 6' x 4" THICK MAINTENANCE PAD SHALL BE PROVIDED ON THE DOWNSIDE SLOPE IMMEDIATELY ADJACENT TO THE JUNCTION BOX. SEE ITS CROSS SECTIONS FOR MAINTENANCE PAD LOCATIONS.
7. PROVIDE POSITIVE DRAINAGE INTO GRAVEL SUBBASE.
8. LIDS OF 95 EXPRESS LANES COMMUNICATION BOXES SHALL SAY "XPL COMM". LIDS OF VDOT COMMUNICATION BOXES SHALL SAY "VDOT COMM".

AFC PLANS

N.T.S.	PROJECT 0095-076-299	SHEET NO. 15(2A6)

Cell Revised 12/11/12

7/18/2022 4589300101S(02A7).dgn
7:19:25 PM Plotted By: kfisher

LIMITED ACCESS HIGHWAY

By Resolution of the Highway Commission dated October 4, 1956.
By Resolution of the Highway Commission dated January 18, 1973.
By Resolution of the Commonwealth Transportation Board dated April 19, 2022

PROJECT MANAGER: Rimpal Shah, P.E. (703) 259-2362 (NOVA District) _____
SURVEYED BY, DATE: H&B Surveying and Mapping, LLC (804) 330-3781, 03/09/2021
DESIGN BY: Whitman, Requardt, & Associates, LLP (804) 212-8700 _____.
SUBSURFACE UTILITY BY, DATE: Accutark, Inc. (804) 550-7740, 07/07/2021

TYPICAL CONDUIT ROUTING ON DMS SIGN STRUCTURE

COMMONWEALTH OF VIRGINIA
JEFFREY D. CHENG
Lic. No. 051900
PROFESSIONAL ENGINEER

Jeffrey D Cheng
2022.07.20 15:11:17 -04'00'

Whitman, Requardt & Associates
Baltimore, Maryland
TRAFFIC ENGINEER

REVISED	STATE	STATE ROUTE	STATE PROJECT	SHEET NO.
	VA.	95	0095-076-299,C-501	15(2A7)

DESIGN FEATURES RELATING TO CONSTRUCTION OR TO REGULATION AND CONTROL OF TRAFFIC MAY BE SUBJECT TO CHANGE AS DEEMED NECESSARY BY THE DEPARTMENT

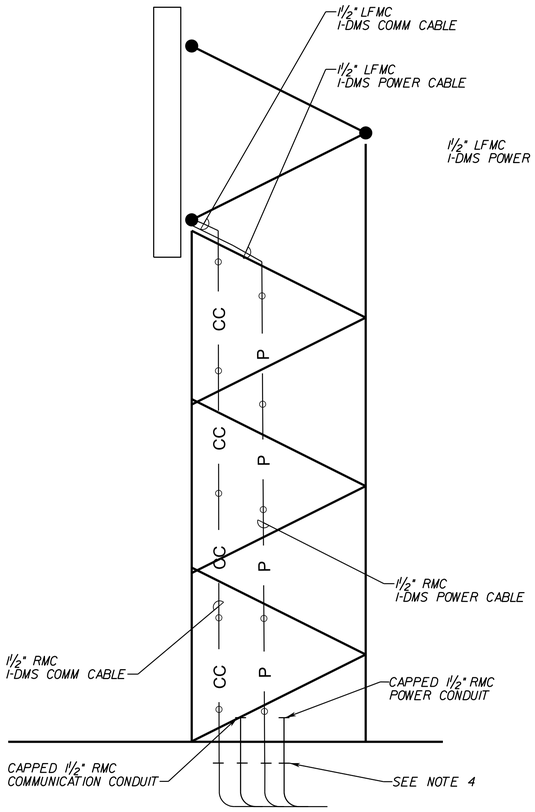

VIEW FROM END OF STRUCTURE
NTS

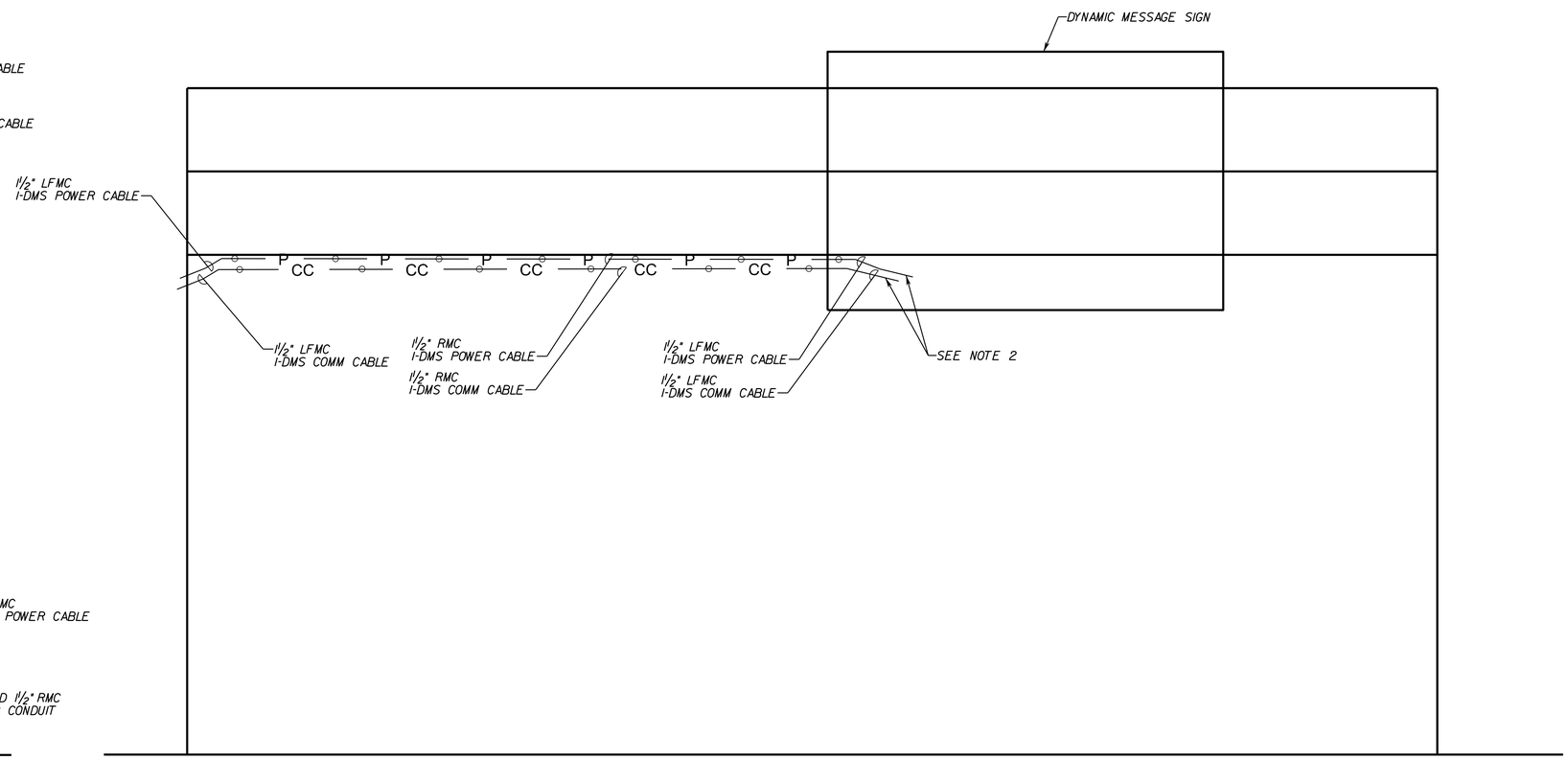

VIEW FROM BEHIND STRUCTURE
NTS

NOTES:

1. CONDUIT CONNECTION DETAILS SHALL BE COORDINATED WITH SIGN STRUCTURE DESIGN/FABRICATION.
2. CONDUITS SHALL BE CONNECTED PER MANUFACTURER'S RECOMMENDATION.
3. PROVIDE CONDUIT COUPLINGS AS REQUIRED.
4. RIGID METAL CONDUITS SHALL CONTINUE 6" BELOW THE FINISHED GRADE. RIGID METAL CONDUITS SHALL BE COUPLED TO PVC OR RIGID METAL CONDUITS AT CONTRACTOR'S DISCRETION TO CONTINUE TO A JUNCTION BOX. RIGID METAL CONDUIT SHALL BE CONTINUOUS ALONG THE UPRIGHT.
5. TYPICAL DMS CONDUIT ROUTING ON OVERHEAD SPAN TYPE STRUCTURE IS SHOWN. BUTTERFLY TYPE STRUCTURES SHALL INCLUDE (2) 1.5 INCH CONDUIT COUPLINGS FOR DMS POWER AND COMMUNICATIONS WIRING.

AFC PLANS

N.T.S.	PROJECT 0095-076-299	SHEET NO. 15(2A7)

LIMITED ACCESS HIGHWAY

By Resolution of the Highway Commission dated October 4, 1956.
By Resolution of the Highway Commission dated January 18, 1973.
By Resolution of the Commonwealth Transportation Board dated April 19, 2022

PROJECT MANAGER: Rimpal Shah, P.E. (703) 259-2362 (NOVA District) _____
SURVEYED BY, DATE: H&B Surveying and Mapping, LLC (804) 330-3781, 03/09/2021
DESIGN BY: Whitman, Requardt, & Associates, LLP (804) 212-8700 _____.
SUBSURFACE UTILITY BY, DATE: Accutrak, Inc. (804) 550-7740, 07/07/2021

COMMONWEALTH OF VIRGINIA
JEFFREY D. CHENG
Lic. No. 051900
PROFESSIONAL ENGINEER

Jeffrey D Cheng
2022.07.20 15:12:45 -04'00'

Whitman, Requardt & Associates
Baltimore, Maryland
TRAFFIC ENGINEER

REVISED	STATE	STATE ROUTE	STATE PROJECT	SHEET NO.
	VA.	95	0095-076-299,C-501	15(2BII)

DESIGN FEATURES RELATING TO CONSTRUCTION OR TO REGULATION AND CONTROL OF TRAFFIC MAY BE SUBJECT TO CHANGE AS DEEMED NECESSARY BY THE DEPARTMENT

GATE SCHEDULES

GATE CABINET: C095HL1561G, STA. 668+27, 47.1', LT.

GATE NUMBER	TYPE	GATE POSITION AS SEEN BY APPROACHING TRAFFIC	STATION	OFFSET	DIMENSION 'A' (FEET)	NORTHING	EASTING	VERTICAL CLEARANCE (FEET)	TOP OF FOUNDATION ELEVATION	TYPICAL DETAIL	NOTES
G-01	VERTICAL - STRAIGHT ARM	1	10+20	7.7', LT.	13.8	348660	3624418	4.0	118.1	15(2B2)	
G-02	VERTICAL - STRAIGHT ARM	2	12+05	11.8', LT.	18.3	348835	3624478	4.0	123.4	15(2B2)	
G-03	VERTICAL - STRAIGHT ARM	3	13+80	18.8', LT.	25.3	349002	3624531	4.0	128.3	15(2B2)	
G-04	VERTICAL - STRAIGHT ARM	4	15+55	20.0', LT.	26.5	349167	3624590	4.0	133.2	15(2B2)	
G-05	VERTICAL - STRAIGHT ARM	5	17+40	20.0', LT.	26.5	349341	3624653	4.0	138.0	15(2B2)	
G-06	VERTICAL - STRAIGHT ARM	6	19+25	18.3', LT.	26.5	349515	3624716	4.0	143.0	15(2B2)	
G-07	VERTICAL - STRAIGHT ARM	7	20+80	16.0', LT.	25.0	349662	3624766	4.0	147.6	15(2B3)	
G-08	VERTICAL - STRAIGHT ARM	8	22+30	14.7', LT.	25.5	349805	3624811	4.0	151.3	15(2B3)	
G-09	VERTICAL - STRAIGHT ARM	9	23+55	12.1', LT.	32.4	349923	3624851	4.0	154.0	15(2B3)	

GATE CABINET: C095HL1565G, STA. 686+14, 42.9', LT.

GATE NUMBER	TYPE	GATE POSITION AS SEEN BY APPROACHING TRAFFIC	STATION	OFFSET	DIMENSION 'A' (FEET)	NORTHING	EASTING	VERTICAL CLEARANCE (FEET)	TOP OF FOUNDATION ELEVATION	TYPICAL DETAIL	NOTES
G-10	VERTICAL - OFFSET ARM	11	27+15	8.7', RT.	32.8	350250	3625002	4.2	160.2	15(2B3)	
G-11	VERTICAL - OFFSET ARM	10	28+40	9.4', RT.	24.1	350368	3625044	4.3	162.4	15(2B3)	
G-12	VERTICAL - OFFSET ARM	9	29+90	10.3', RT.	26.1	350510	3625095	4.2	165.1	15(2B3)	
G-13	VERTICAL - OFFSET ARM	8	31+65	11.9', RT.	26.1	350675	3625153	4.2	167.7	15(2B3)	
G-14	VERTICAL - OFFSET ARM	7	33+40	14.1', RT.	26.1	350841	3625208	4.2	170.0	15(2B3)	
G-15	VERTICAL - STRAIGHT ARM	6	35+15	17.3', RT.	28.2	351007	3625263	4.0	170.0	15(2B2)	
G-16	VERTICAL - STRAIGHT ARM	5	37+15	21.9', RT.	27.7	351197	3625332	4.0	172.1	15(2B2)	
G-17	VERTICAL - STRAIGHT ARM	4	39+15	22.0', RT.	28.5	351383	3625400	4.0	174.0	15(2B2)	
G-18	VERTICAL - STRAIGHT ARM	3	41+15	21.1', RT.	27.7	351571	3625468	4.0	176.0	15(2B2)	
G-19	VERTICAL - STRAIGHT ARM	2	43+15	12.7', RT.	19.7	351762	3625528	4.0	178.0	15(2B2)	
G-20	VERTICAL - STRAIGHT ARM	1	343+50	33.2', RT.	15.3	351951	3625593	4.0	180.1	15(2B2)	

GATE CABINET: C2000XR0001G, STA. 63+50, 63.6' RT.

GATE NUMBER	TYPE	GATE POSITION AS SEEN BY APPROACHING TRAFFIC	STATION	OFFSET	DIMENSION 'A' (FEET)	NORTHING	EASTING	VERTICAL CLEARANCE (FEET)	TOP OF FOUNDATION ELEVATION	TYPICAL DETAIL	NOTES
G-21	HORIZONTAL	1	64+62	65.8', RT.	14.9	355401	3626326	4.0	215.9	15(2B4)	ON-GRADE
G-22	HORIZONTAL	2	65+64	65.1', RT.	14.1	355372	3626424	4.0	33.5"	15(2B5)	BRIDGE PARAPET MOUNT
G-23	HORIZONTAL	3	66+59	65.1', RT.	14.1	355344	3626515	4.0	33.5"	15(2B5)	BRIDGE PARAPET MOUNT
G-24	HORIZONTAL	4	68+21	8.6', RT.	12.5	355350	3626686	4.0	34.5"	15(2B6)	BRIDGE MEDIAN BARRIER MOUNT
G-25	HORIZONTAL	3	69+21	8.6', RT.	12.5	355320	3626781	4.0	34.5"	15(2B6)	BRIDGE MEDIAN BARRIER MOUNT
G-26	HORIZONTAL	2	70+21	8.6', RT.	12.5	355291	3626877	4.0	34.5"	15(2B6)	BRIDGE MEDIAN BARRIER MOUNT
G-27	HORIZONTAL	1	71+16	6.5', RT.	10.6	355264	3626968	4.0	34.5"	15(2B7)	MEDIAN BARRIER MOUNT

AFC PLANS

NOTES:

1. STATION AND OFFSET INFORMATION IS PROVIDED TO THE CENTERLINES OF THE GATE HOUSING.

PROJECT	SHEET NO.
0095-076-299	15(2BII)

Cell Revised 12/11/12

LIMITED ACCESS HIGHWAY

By Resolution of the Highway Commission dated October 4, 1956.
By Resolution of the Highway Commission dated January 18, 1973.
By Resolution of the Commonwealth Transportation Board dated April 19, 2022

PROJECT MANAGER: Rimpal Shah, P.E. (703) 259-2362 (NOVA District) _____
SURVEYED BY, DATE: B&B Surveying and Mapping, LLC (804) 330-3781, 03/09/2021
DESIGN BY: Whitman, Requardt, & Associates, LLP (804) 212-8700 _____
SUBSURFACE UTILITY BY, DATE: Accumark, Inc. (804) 550-7740, 07/07/2021

VERTICAL SWING GATE DETAIL

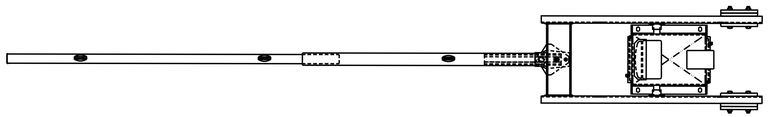

PLAN VIEW

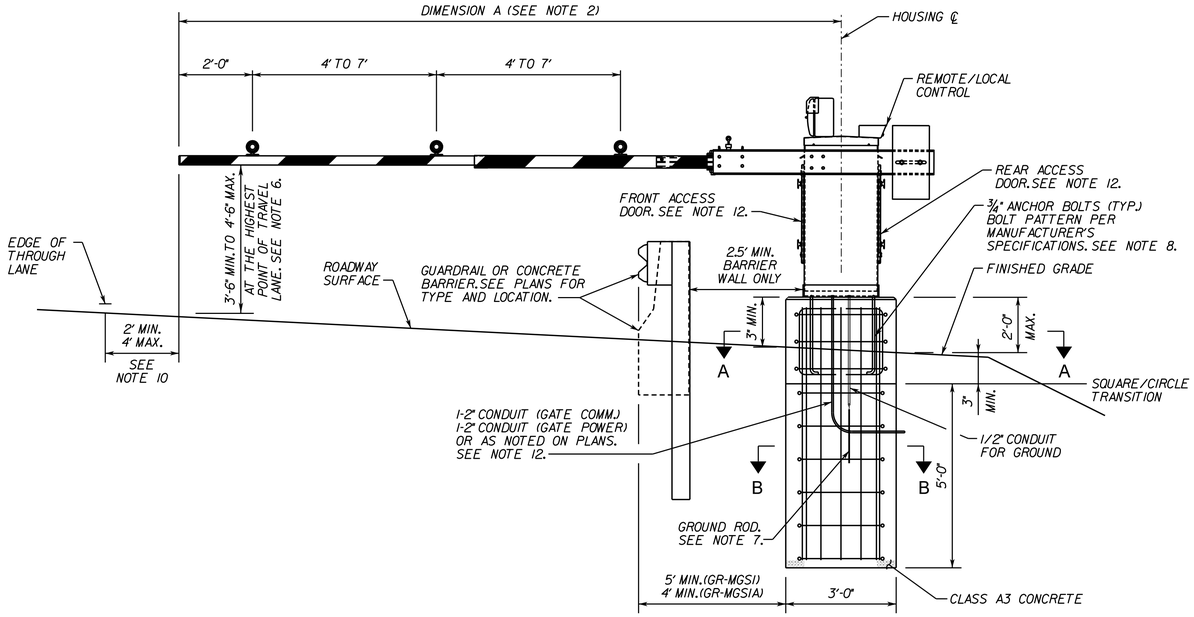

SECTION VIEW - STRAIGHT ARM IN EARTH

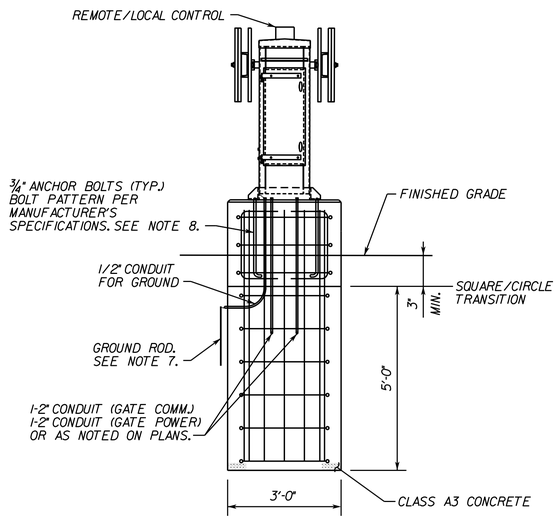

END VIEW

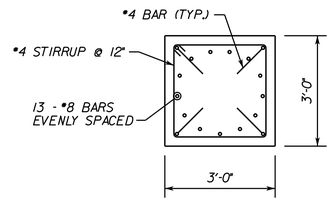

SECTION A-A

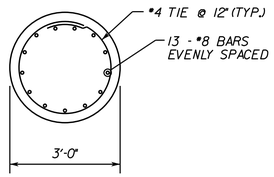

SECTION B-B

NOTES:

1. FOUNDATION SHALL EXTEND 5'-3" MIN. BELOW GRADE, INCLUDING WHEN INSTALLED ON SLOPES. ADJUST THE ELEVATION OF THE FOUNDATIONS FOR GATES IN EARTH SO THAT THE GATE ARM CLEARS ANY GUARDRAIL OR BARRIER, AND IS 4' (+/- 0.5') ABOVE THE HIGHEST POINT OF THE TRAVEL LANE, AND IS WITHIN THE TOLERANCES SHOWN ON THE PLAN.
2. SEE GATE SCHEDULES ON SHEET 15(2B1) FOR GATE ARM LENGTHS. FINAL GATE ARM LENGTH TO BE FIELD VERIFIED BY CONTRACTOR.
3. GATE ARMS 0' TO 4' LONG SHALL HAVE ONE (1) WARNING LIGHT. GATE ARMS 4' TO 8' LONG SHALL HAVE TWO (2) WARNING LIGHTS. GATE ARMS MORE THAN 8' LONG SHALL HAVE THREE (3) WARNING LIGHTS. GATE ARM SHALL NOT HAVE MORE THAN THREE WARNING LIGHTS.
4. GATES SHALL BE B&B ROADWAY VW-4.
5. CONTRACTOR SHALL VERIFY ALL GATE DIMENSIONS WITH THE MANUFACTURER/INSTALLER AND ALL FIELD DIMENSIONS PRIOR TO SHOP DRAWING SUBMITTALS AND INSTALLATION.
6. SEE GATE SCHEDULES FOR ELEVATION DATA. FINAL ELEVATION AND GATE ARM HEIGHT TO BE FIELD VERIFIED BY CONTRACTOR.
7. GROUND ROD SHALL BE BURIED AT LEAST 6" BELOW FINISHED GRADE.
8. ANCHOR BOLTS TO BE CAST IN PLACE PER MANUFACTURER'S SPECIFICATIONS. THE CONTRACTOR MAY USE AN EPOXY ANCHOR BOLT SYSTEM WHERE FIELD DRILLING IS PERMITTED ON THE CONCRETE FOUNDATION. IF USED, THE EPOXY SHALL MEET THE CONSTRUCTION GRADE AS APPROVED BY THE ENGINEER.
9. ALL EXPOSED CONCRETE SURFACE EDGES SHALL BE CHAMFERED 3/4".
10. GATE ARMS FOR GATES LOCATED BETWEEN THE THEORETICAL GORE AND PHYSICAL GORE MAY EXTEND THE FULL WIDTH OF THE RAMP LANE, PROVIDED THE END OF THE ARM IS OFFSET AT LEAST 2' FROM THE EDGE OF THE THROUGH LANE.
11. GATE KICKSTANDS SHALL BE PROVIDED ACCORDING TO MANUFACTURER'S RECOMMENDATIONS.
12. THE FRONT AND REAR ACCESS DOORS ON THE GATE HOUSING SHALL BE ABLE TO OPEN AND SHALL BE REMOVABLE.

COMMONWEALTH OF VIRGINIA
JEFFREY D. CHENG
Lic. No. 051900
PROFESSIONAL ENGINEER

Jeffrey D Cheng
2022.07.20 15:13:15 -04'00'

Whitman, Requardt & Associates
Baltimore, Maryland
TRAFFIC ENGINEER

REVISED	STATE	STATE ROUTE	STATE PROJECT	SHEET NO.
	VA.	95	0095-076-299,C-501	15(2B2)

DESIGN FEATURES RELATING TO CONSTRUCTION OR TO REGULATION AND CONTROL OF TRAFFIC MAY BE SUBJECT TO CHANGE AS DEEMED NECESSARY BY THE DEPARTMENT

AFC PLANS

N.T.S.	PROJECT 0095-076-299	SHEET NO. 15(2B2)

7/18/2022 4589300101S(02B3).dgn
7:19:37 PM Plotted By: kfisher

LIMITED ACCESS HIGHWAY

By Resolution of the Highway Commission dated October 4, 1956.
By Resolution of the Highway Commission dated January 18, 1973.
By Resolution of the Commonwealth Transportation Board dated April 19, 2022

PROJECT MANAGER: Rimpal Shah, P.E. (703) 259-2362 (NOVA District)
SURVEYED BY, DATE: B&B Surveying and Mapping, LLC (804) 330-3781, 03/09/2021
DESIGN BY: Whitman, Requardt, & Associates, LLP (804) 212-8700
SUBSURFACE UTILITY BY, DATE: Accutark, Inc. (804) 550-7740, 07/07/2021

REVISED	STATE	STATE ROUTE	STATE PROJECT	SHEET NO.
	VA.	95	0095-076-299,C-501	15(2B3)

COMMONWEALTH OF VIRGINIA
JEFFREY D. CHENG
Lic. No. 051900
PROFESSIONAL ENGINEER

Jeffrey D Cheng
2022.07.20 15:13:41 -04'00'

Whitman, Requardt & Associates
Baltimore, Maryland
TRAFFIC ENGINEER

DESIGN FEATURES RELATING TO CONSTRUCTION OR TO REGULATION AND CONTROL OF TRAFFIC MAY BE SUBJECT TO CHANGE AS DEEMED NECESSARY BY THE DEPARTMENT

VERTICAL SWING GATE DETAIL

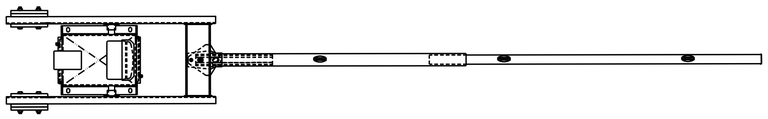

PLAN VIEW

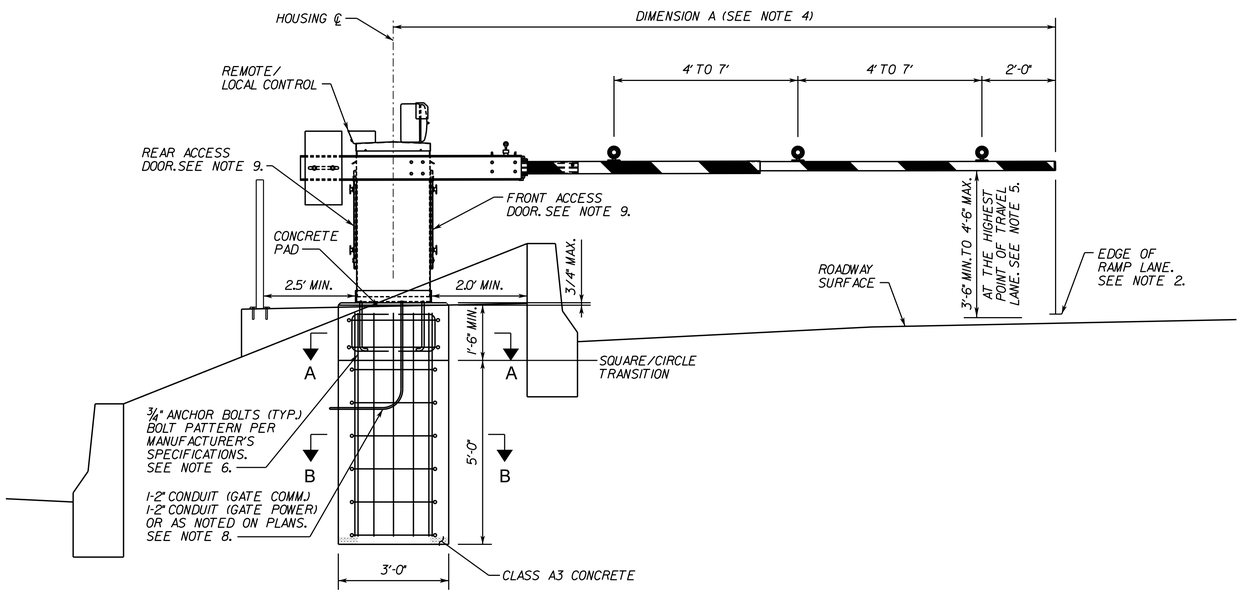

NOTES:

1. REFER TO SHEETS 15(2B8) AND 15(2B9) FOR DETAILS OF MAINTENANCE AREAS FOR GATES LOCATED WITHIN CAPPED AREAS BETWEEN BARRIERS.
2. GATE ARMS FOR GATES G-07 AND G-08 SHALL EXTEND THE FULL WIDTH OF THE RAMP LANE. THE GATE ARM FOR GATE G-09 SHALL EXTEND TO THE CENTER OF THE IMPACT ATTENUATOR.
3. 19" FROM CENTER OF UPPER TO CENTER OF LOWER ARMS IS USED FOR THE BASIS OF DESIGN FOR THE GATE CROSS SECTIONS SHOWN ON THE PLANS. THE CONTRACTOR SHALL VERIFY THE PROPER ARM OFFSET TO ACHIEVE THE REQUIRED ARM VERTICAL CLEARANCE AND SHALL SUBMIT DETAILS WITH THE SHOP DRAWING SUBMITTAL.
4. SEE GATE SCHEDULES ON SHEET 15(2B1) FOR GATE ARM LENGTHS. FINAL GATE ARM LENGTH TO BE FIELD VERIFIED BY CONTRACTOR.
5. SEE GATE SCHEDULES FOR ELEVATION DATA. FINAL ELEVATION AND GATE ARM HEIGHT TO BE FIELD VERIFIED BY CONTRACTOR.
6. ANCHOR BOLTS TO BE CAST IN PLACE PER MANUFACTURER'S SPECIFICATIONS. THE CONTRACTOR MAY USE AN EPOXY ANCHOR BOLT SYSTEM WHERE FIELD DRILLING IS PERMITTED ON THE CONCRETE FOUNDATION. IF USED, THE EPOXY SHALL MEET THE CONSTRUCTION GRADE AS APPROVED BY THE ENGINEER.
7. GATE ARMS FOR GATES LOCATED BETWEEN THE THEORETICAL GORE AND PHYSICAL GORE MAY EXTEND THE FULL WIDTH OF THE RAMP LANE, PROVIDED THE END OF THE ARM IS OFFSET AT LEAST 2' FROM THE EDGE OF THE THROUGH LANE.
8. CONDUIT DESIGNATED FOR POWER SHALL CONTAIN (1) #6 AWG. GROUND WIRE TO BE GROUNDED IN THE ASSOCIATED JUNCTION BOX.
9. THE FRONT AND REAR ACCESS DOORS ON THE GATE HOUSING SHALL BE ABLE TO OPEN AND SHALL BE REMOVABLE.
10. REFER TO SHEET 15(2B2) FOR ADDITIONAL FOUNDATION DETAILS.
11. OFFSET GATE ARMS SHALL ONLY BE USED WHERE SHOWN ON THE PLANS. REFER TO GATE SCHEDULE ON SHEET 15(2B1).
12. GATE ARMS 0' TO 4' LONG SHALL HAVE ONE (1) WARNING LIGHT. GATE ARMS 4' TO 8' LONG SHALL HAVE TWO (2) WARNING LIGHTS. GATE ARMS MORE THAN 8' LONG SHALL HAVE THREE (3) WARNING LIGHTS. GATE ARM SHALL NOT HAVE MORE THAN THREE WARNING LIGHTS.
13. GATES SHALL BE B&B ROADWAY VW-4.
14. CONTRACTOR SHALL VERIFY ALL GATE DIMENSIONS WITH THE MANUFACTURER/INSTALLER AND ALL FIELD DIMENSIONS PRIOR TO SHOP DRAWING SUBMITTALS AND INSTALLATION.
15. ALL EXPOSED CONCRETE SURFACE EDGES SHALL BE CHAMFERED 3/4".
16. GATE KICKSTANDS SHALL BE PROVIDED ACCORDING TO MANUFACTURER'S RECOMMENDATIONS.

SECTION VIEW - STRAIGHT ARM IN CAPPED AREAS BETWEEN BARRIERS

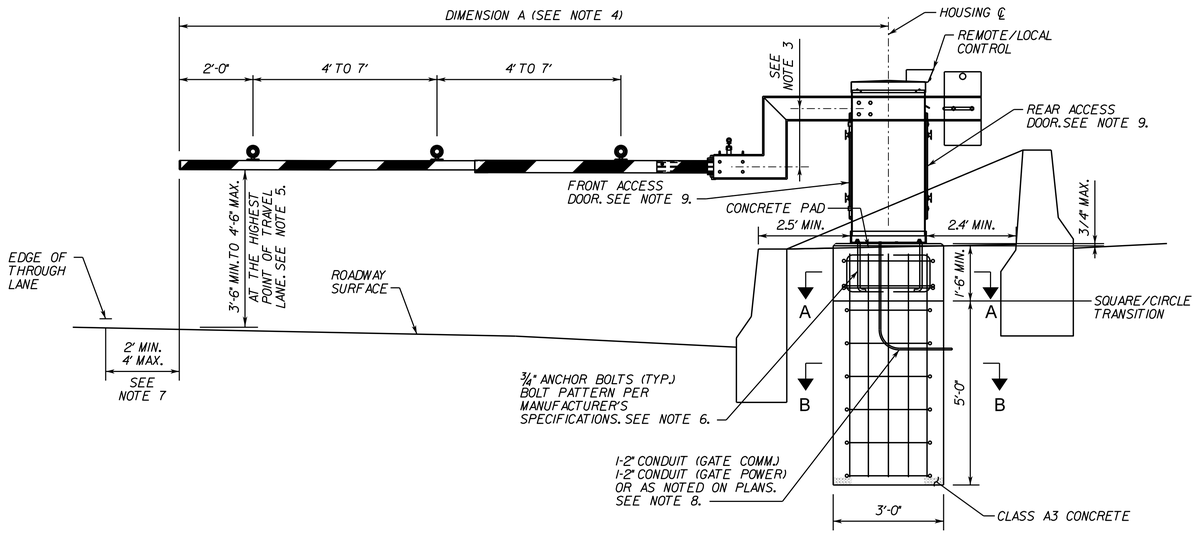

SECTION VIEW - OFFSET ARM

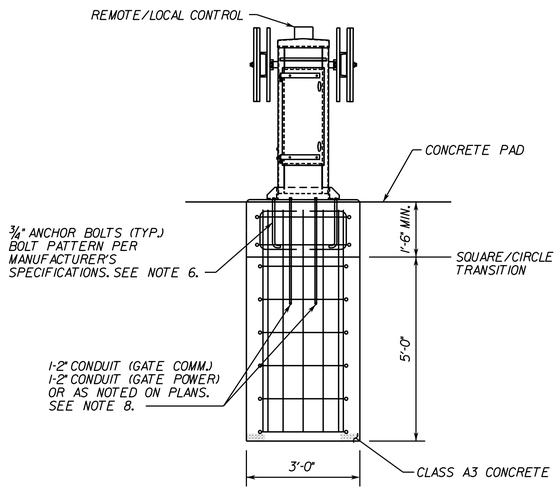

END VIEW

AFC PLANS

N.T.S.	PROJECT 0095-076-299	SHEET NO. 15(2B3)

7/18/2022 4589300101S(02B4).dgn
7:19:38 PM Plotted By: kfisher

LIMITED ACCESS HIGHWAY

By Resolution of the Highway Commission dated October 4, 1956.
By Resolution of the Highway Commission dated January 18, 1973.
By Resolution of the Commonwealth Transportation Board dated April 19, 2022

PROJECT MANAGER: Rimpal Shah, P.E. (703) 259-2362 (NOVA District) _____
SURVEYED BY, DATE: B&B Surveying and Mapping, LLC (804) 330-3781, 03/09/2021
DESIGN BY: Whitman, Requardt & Associates, LLP (804) 212-8700 _____
SUBSURFACE UTILITY BY, DATE: Accumark, Inc. (804) 550-7740, 07/07/2021

HORIZONTAL SWING GATE DETAIL

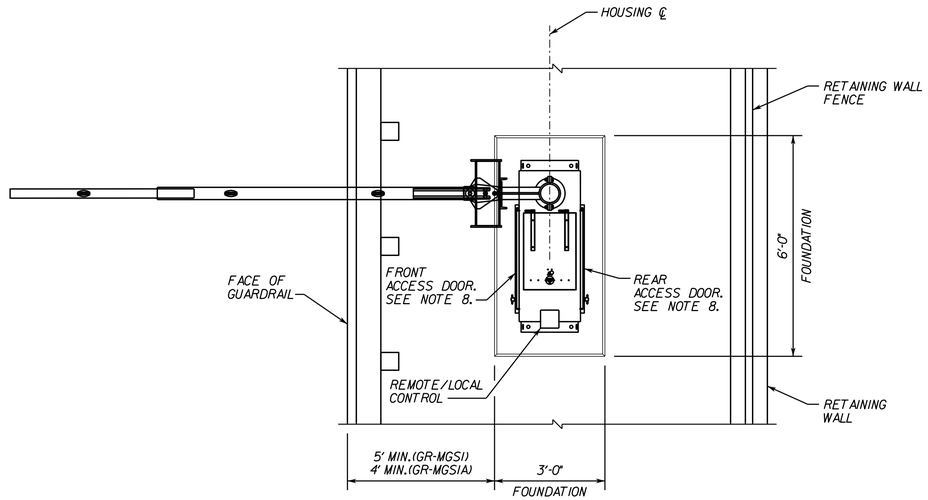

PLAN VIEW

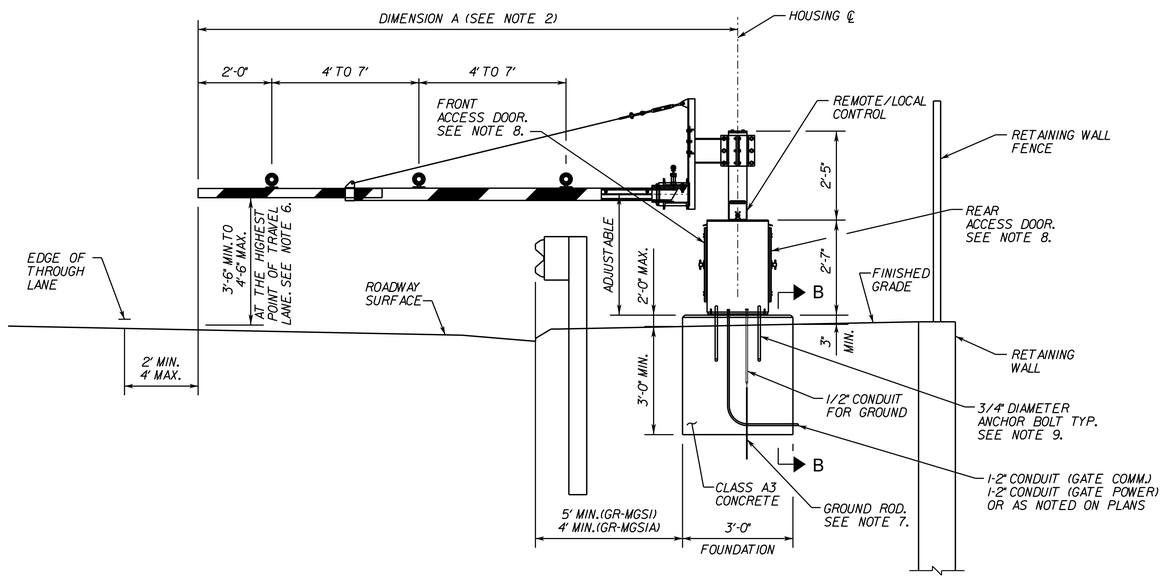

SECTION VIEW

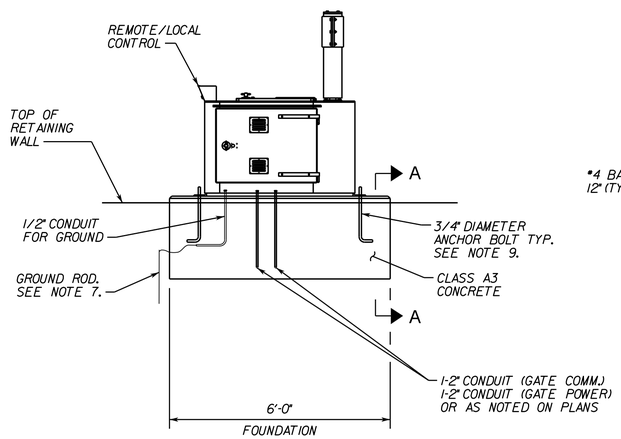

END VIEW

NOTES:

1. FOUNDATION SHALL EXTEND 3'-0" MIN. BELOW GRADE, INCLUDING WHEN INSTALLED ON SLOPES. ADJUST THE ELEVATION OF THE FOUNDATION FOR GATE IN EARTH SO THAT THE GATE ARM CLEARS ANY GUARDRAIL OR BARRIER, AND IS 4' (+/- 0.5') ABOVE THE HIGHEST POINT OF THE TRAVEL LANE.
2. SEE GATE SCHEDULES ON SHEET 15(2B1) FOR GATE ARM LENGTHS. FINAL GATE ARM LENGTH TO BE FIELD VERIFIED BY THE CONTRACTOR.
3. GATE ARMS 0' TO 4' LONG SHALL HAVE ONE (1) WARNING LIGHT. GATE ARMS 4' TO 8' LONG SHALL HAVE TWO (2) WARNING LIGHTS. GATE ARMS MORE THAN 8' LONG SHALL HAVE THREE (3) WARNING LIGHTS. GATE ARM SHALL NOT HAVE MORE THAN THREE WARNING LIGHTS.
4. GATES SHALL BE B&B ROADWAY HW-4.
5. CONTRACTOR SHALL VERIFY ALL GATE DIMENSIONS WITH THE MANUFACTURER/INSTALLER AND ALL FIELD DIMENSIONS PRIOR TO SHOP DRAWING SUBMITTALS AND INSTALLATION.
6. SEE GATE SCHEDULES FOR ELEVATION DATA. FINAL ELEVATION AND GATE ARM HEIGHT TO BE FIELD VERIFIED BY CONTRACTOR.
7. GROUND ROD SHALL BE BURIED AT LEAST 6" BELOW FINISHED GRADE.
8. THE FRONT AND REAR ACCESS DOORS ON THE GATE HOUSING SHALL BE ABLE TO OPEN AND SHALL BE REMOVABLE.
9. ANCHOR BOLTS TO BE CAST IN PLACE PER MANUFACTURER'S SPECIFICATIONS. THE CONTRACTOR MAY USE AN EPOXY ANCHOR BOLT SYSTEM WHERE FIELD DRILL IS PERMITTED ON THE CONCRETE FOUNDATION. IF USED, THE EPOXY SHALL MEET THE CONSTRUCTION GRADE AS APPROVED BY THE ENGINEER.
10. ALL EXPOSED CONCRETE SURFACE EDGES SHALL BE CHAMFERED 3/4".

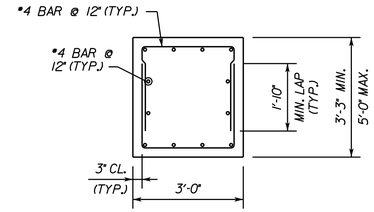

SECTION A-A

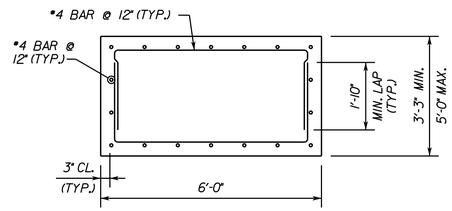

SECTION B-B

AFC PLANS

JEFFREY D. CHENG
Lic. No. 051900
COMMONWEALTH OF VIRGINIA
PROFESSIONAL ENGINEER

Jeffrey D Cheng
2022.07.20 15:14:04 -04'00'

Whitman, Requardt & Associates
Baltimore, Maryland
TRAFFIC ENGINEER

REVISED	STATE	STATE ROUTE	STATE PROJECT	SHEET NO.
	VA.	95	0095-076-299,C-501	15(2B4)

DESIGN FEATURES RELATING TO CONSTRUCTION OR TO REGULATION AND CONTROL OF TRAFFIC MAY BE SUBJECT TO CHANGE AS DEEMED NECESSARY BY THE DEPARTMENT

N.T.S.	PROJECT 0095-076-299	SHEET NO. 15(2B4)

LIMITED ACCESS HIGHWAY

By Resolution of the Highway Commission dated October 4, 1956.
By Resolution of the Highway Commission dated January 18, 1973.
By Resolution of the Commonwealth Transportation Board dated April 19, 2022

PROJECT MANAGER Rimpal Shah, P.E. (703) 259-2362 (NOVA District) _____
SURVEYED BY, DATE B&B Surveying and Mapping, LLC (804) 330-3781, 03/09/2021
DESIGN BY Whitman, Requardt, & Associates, LLP (804) 212-8700 _____
SUBSURFACE UTILITY BY, DATE Accumark, Inc. (804) 550-7740, 07/07/2021

COMMONWEALTH OF VIRGINIA
JEFFREY D. CHENG
Lic. No. 051900
PROFESSIONAL ENGINEER

Jeffrey D Cheng
2022.07.20 15:14:28 -04'00'

Whitman, Requardt & Associates
Baltimore, Maryland
TRAFFIC ENGINEER

REVISED	STATE	STATE ROUTE	STATE PROJECT	SHEET NO.
	VA.	95	0095-076-299,C-501	15(2B5)

DESIGN FEATURES RELATING TO CONSTRUCTION OR TO REGULATION AND CONTROL OF TRAFFIC MAY BE SUBJECT TO CHANGE AS DEEMED NECESSARY BY THE DEPARTMENT

HORIZONTAL SWING GATE DETAIL - BRIDGE PARAPET MOUNTED

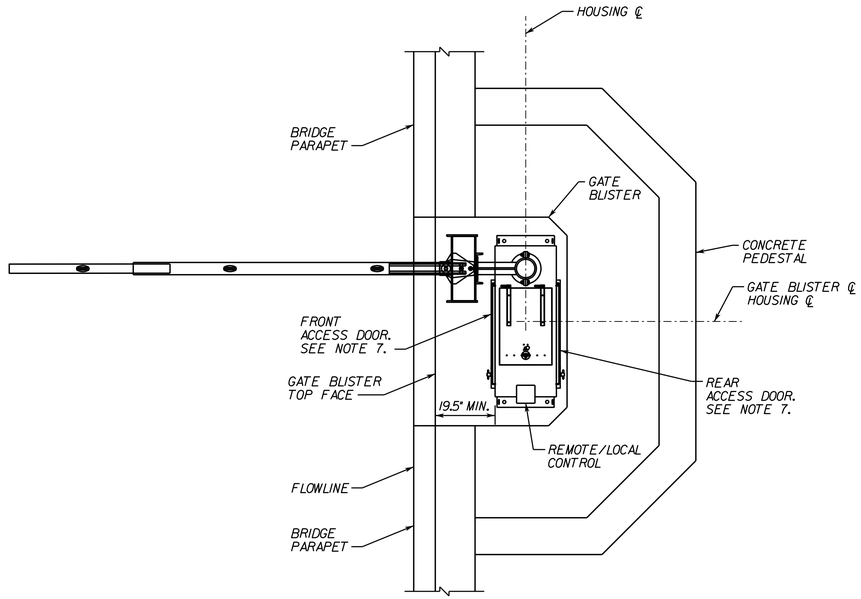

PLAN VIEW

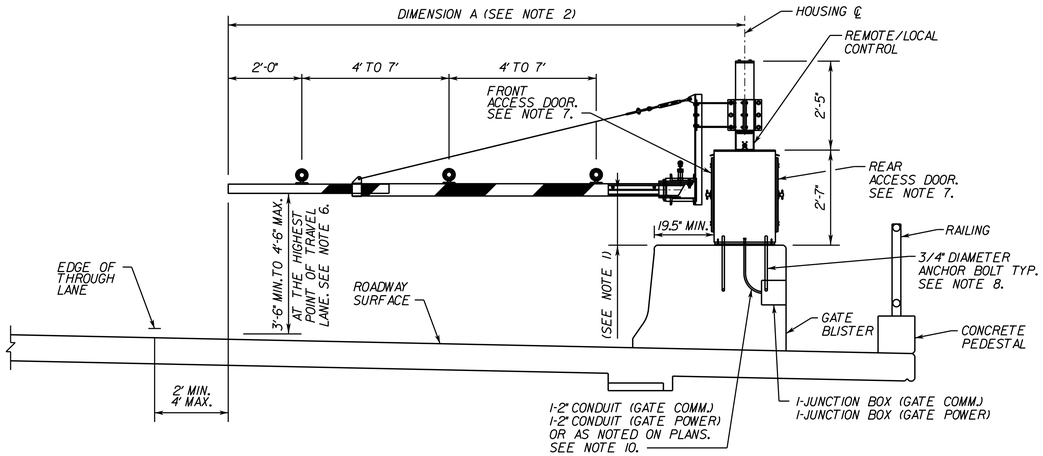

SECTION VIEW

NOTES:

1. ADJUST ELEVATION OF THE GATE ARM SO THAT THE GATE ARM HEIGHT ABOVE GRADE CLEARS ANY GUARDRAIL, BARRIER, OR PLATE AND IS 4' (+/- 0.5') ABOVE THE HIGHEST POINT OF THE TRAVEL LANE.
2. SEE GATE SCHEDULES ON SHEET 15(2B1) FOR GATE ARM LENGTHS. FINAL GATE ARM LENGTH TO BE FIELD VERIFIED BY THE CONTRACTOR.
3. GATE ARMS 0' TO 4' LONG SHALL HAVE ONE (1) WARNING LIGHT. GATE ARMS 4' TO 8' LONG SHALL HAVE TWO (2) WARNING LIGHTS. GATE ARMS MORE THAN 8' LONG SHALL HAVE THREE (3) WARNING LIGHTS. GATE ARM SHALL NOT HAVE MORE THAN THREE WARNING LIGHTS.
4. GATE SHALL BE B&B ROADWAY HW-4.
5. CONTRACTOR SHALL VERIFY ALL GATE DIMENSIONS WITH THE MANUFACTURER/INSTALLER AND ALL FIELD DIMENSIONS PRIOR TO SHOP DRAWING SUBMITTALS AND INSTALLATION.
6. SEE GATE SCHEDULES FOR ELEVATION DATA. FINAL ELEVATION AND GATE ARM HEIGHT TO BE FIELD VERIFIED BY CONTRACTOR.
7. THE FRONT AND REAR ACCESS DOORS ON THE GATE HOUSING SHALL BE ABLE TO OPEN AND SHALL BE REMOVABLE.
8. ANCHOR BOLTS TO BE CAST IN PLACE PER MANUFACTURER'S SPECIFICATIONS. THE CONTRACTOR MAY USE AN EPOXY ANCHOR BOLT SYSTEM WHERE FIELD DRILL IS PERMITTED ON THE CONCRETE FOUNDATION. IF USED, THE EPOXY SHALL MEET THE CONSTRUCTION GRADE AS APPROVED BY THE ENGINEER.
9. REFER TO THE OPITZ BRIDGE PLANS FOR DETAILS OF THE GATE BRIDGE PARAPET MOUNT.
10. CONDUIT DESIGNATED FOR POWER SHALL CONTAIN (1) #6 AWG. GROUND WIRE THAT IS CONNECTED TO A GROUND WIRE IN A JUNCTION BOX LOCATED IN THE GROUND OFF THE BRIDGE. REFER TO SHEET 15(9B) FOR WIRING DETAILS.

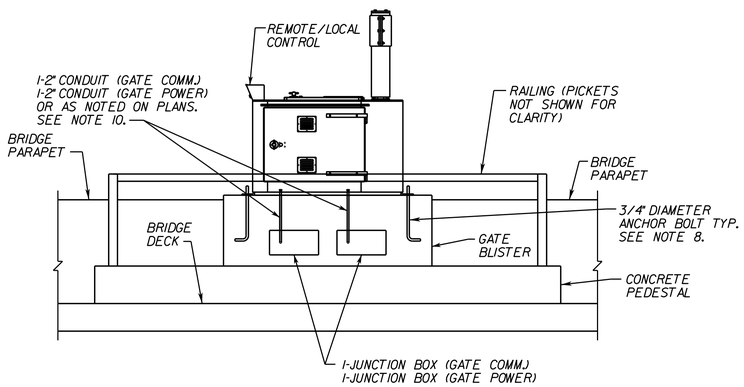

END VIEW

AFC PLANS

N.T.S.	PROJECT 0095-076-299	SHEET NO. 15(2B5)

LIMITED ACCESS HIGHWAY

By Resolution of the Highway Commission dated October 4, 1956.
By Resolution of the Highway Commission dated January 18, 1973.
By Resolution of the Commonwealth Transportation Board dated April 19, 2022

PROJECT MANAGER: Rimpal Shah, P.E. (703) 259-2362 (NOVA District) _____
SURVEYED BY, DATE: B&B Surveying and Mapping, LLC (804) 330-3781, 03/09/2021
DESIGN BY: Whitman, Requardt, & Associates, LLP (804) 212-8700 _____
SUBSURFACE UTILITY BY, DATE: Accumark, Inc. (804) 550-7740, 07/07/2021

HORIZONTAL SWING GATE DETAIL - BRIDGE MEDIAN BARRIER MOUNTED

COMMONWEALTH OF VIRGINIA
JEFFREY D. CHENG
Lic. No. 051900
PROFESSIONAL ENGINEER

Jeffrey D Cheng
2022.07.20 15:14:59 -04'00'

Whitman, Requardt & Associates
Baltimore, Maryland
TRAFFIC ENGINEER

REVISED	STATE	STATE ROUTE	STATE PROJECT	SHEET NO.
	VA.	95	0095-076-299,C-501	15(2B6)

DESIGN FEATURES RELATING TO CONSTRUCTION OR TO REGULATION AND CONTROL OF TRAFFIC MAY BE SUBJECT TO CHANGE AS DEEMED NECESSARY BY THE DEPARTMENT

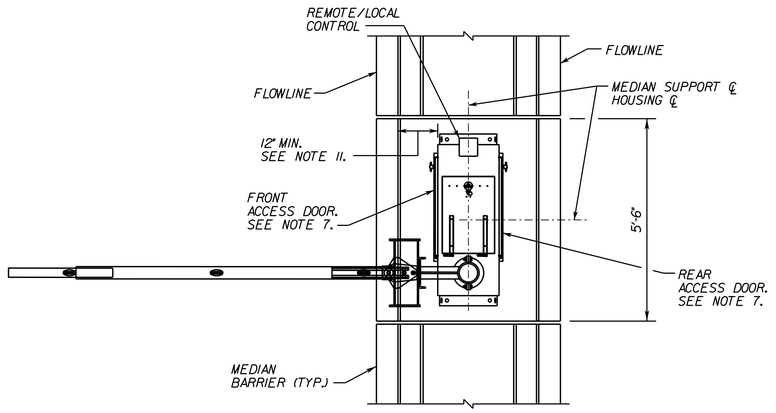

PLAN VIEW

NOTES:

1. ADJUST ELEVATION OF THE GATE ARM SO THAT THE GATE ARM HEIGHT ABOVE GRADE CLEARS ANY GUARDRAIL, BARRIER, OR PLATE AND IS 4' (+/- 0.5') ABOVE THE HIGHEST POINT OF THE TRAVEL LANE.
2. SEE GATE SCHEDULES ON SHEET 15(2B11) FOR GATE ARM LENGTHS. FINAL GATE ARM LENGTH TO BE FIELD VERIFIED BY THE CONTRACTOR.
3. GATE ARMS 0' TO 4' LONG SHALL HAVE ONE (1) WARNING LIGHT. GATE ARMS 4' TO 8' LONG SHALL HAVE TWO (2) WARNING LIGHTS. GATE ARMS MORE THAN 8' LONG SHALL HAVE THREE (3) WARNING LIGHTS. GATE ARM SHALL NOT HAVE MORE THAN THREE WARNING LIGHTS.
4. GATE SHALL BE B&B ROADWAY HW-4.
5. CONTRACTOR SHALL VERIFY ALL GATE DIMENSIONS WITH THE MANUFACTURER/INSTALLER AND ALL FIELD DIMENSIONS PRIOR TO SHOP DRAING SUBMITTALS AND INSTALLATION.
6. SEE GATE SCHEDULES FOR ELEVATION DATA. FINAL ELEVATION AND GATE ARM HEIGHT TO BE FIELD VERIFIED BY CONTRACTOR.
7. THE FRONT AND REAR ACCESS DOORS ON THE GATE HOUSING SHALL BE ABLE TO OPEN AND SHALL BE REMOVABLE.
8. ANCHOR BOLTS TO BE CAST IN PLACE PER MANUFACTURER'S INSTRUCTIONS. THE CONTRACTOR MAY USE AN EPOXY ANCHOR BOLT SYSTEM WHERE FIELD DRILL IS PERMITTED ON THE CONCRETE FOUNDATION. IF USED, THE EPOXY SHALL MEET THE CONSTRUCTION GRADE AS APPROVED BY THE ENGINEER.
9. REFER TO THE OPITZ BRIDGE PLANS FOR DETAILS OF THE GATE BRIDGE MEDIAN BARRIER MOUNT.
10. CONDUIT DESIGNATED FOR POWER SHALL CONTAIN (1) #6 AWG. GROUND WIRE THAT IS CONNECTED TO A GROUND WIRE IN A JUNCTION BOX LOCATED IN THE GROUND OFF THE BRIDGE. REFER TO SHEET 15(9B) FOR WIRING DETAILS.
11. CENTER GATE HOUSING ON TOP LEVEL PORTION OF THE MEDIAN SUPPORT.

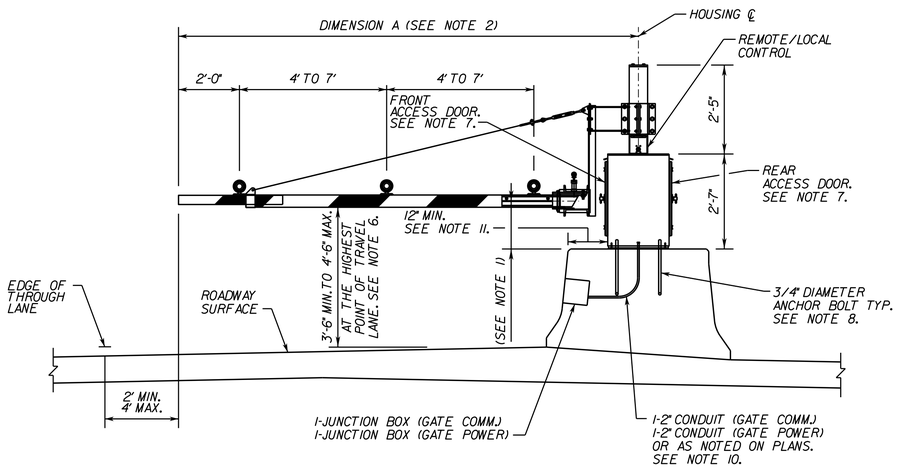

SECTION VIEW

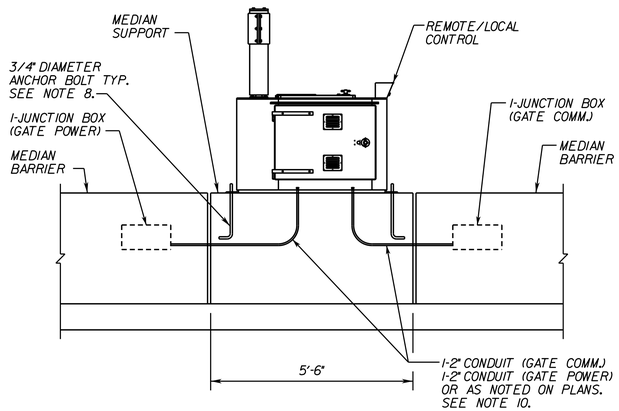

END VIEW

AFC PLANS

N.T.S.	PROJECT 0095-076-299	SHEET NO. 15(2B6)

7/18/2022 4589300101S(02B7).dgn
7:19:44 PM Plotted By: kfisher

LIMITED ACCESS HIGHWAY

By Resolution of the Highway Commission dated October 4, 1956.
By Resolution of the Highway Commission dated January 18, 1973.
By Resolution of the Commonwealth Transportation Board dated April 19, 2022

PROJECT MANAGER: Rimpal Shah, P.E. (703) 259-2362 (NOVA District) _____
SURVEYED BY, DATE: B&B Surveying and Mapping, LLC (804) 330-3781, 03/09/2021
DESIGN BY: Whitman, Requardt & Associates, LLP (804) 212-8700 _____
SUBSURFACE UTILITY BY, DATE: Accumark, Inc. (804) 550-7740, 07/07/2021

G-27 HORIZONTAL SWING GATE DETAIL - MEDIAN BARRIER MOUNTED

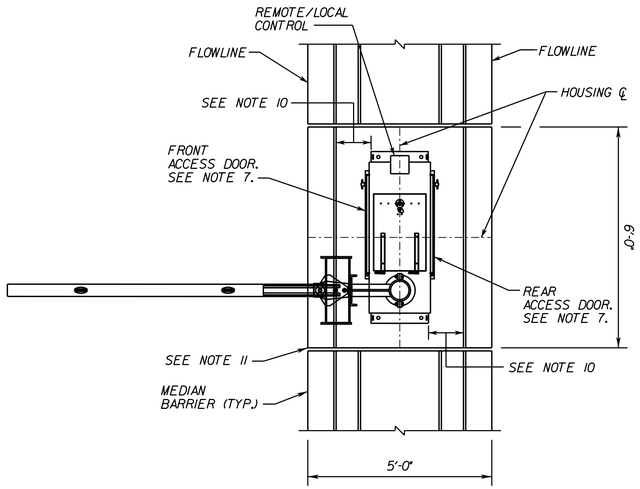

PLAN VIEW

NOTES:

1. ADJUST ELEVATION OF THE GATE ARM SO THAT THE GATE ARM HEIGHT ABOVE GRADE CLEARS ANY GUARDRAIL, BARRIER, OR PLATE AND IS 4' (+/- 0.5') ABOVE THE HIGHEST POINT OF THE TRAVEL LANE.
2. SEE GATE SCHEDULES ON SHEET 15(2B1) FOR GATE ARM LENGTHS. FINAL GATE ARM LENGTH TO BE FIELD VERIFIED BY THE CONTRACTOR.
3. GATE ARMS 0' TO 4' LONG SHALL HAVE ONE (1) WARNING LIGHT. GATE ARMS 4' TO 8' LONG SHALL HAVE TWO (2) WARNING LIGHTS. GATE ARMS MORE THAN 8' LONG SHALL HAVE THREE (3) WARNING LIGHTS. GATE ARM SHALL NOT HAVE MORE THAN THREE WARNING LIGHTS.
4. GATE SHALL BE B&B ROADWAY HW-4.
5. CONTRACTOR SHALL VERIFY ALL GATE DIMENSIONS WITH THE MANUFACTURER/INSTALLER AND ALL FIELD DIMENSIONS PRIOR TO SHOP DRAING SUBMITTALS AND INSTALLATION.
6. SEE GATE SCHEDULES FOR ELEVATION DATA. FINAL ELEVATION AND GATE ARM HEIGHT TO BE FIELD VERIFIED BY CONTRACTOR.
7. THE FRONT AND REAR ACCESS DOORS ON THE GATE HOUSING SHALL BE ABLE TO OPEN AND SHALL BE REMOVABLE.
8. ANCHOR BOLTS TO BE CAST IN PLACE PER MANUFACTURER'S INSTRUCTIONS. THE CONTRACTOR MAY USE AN EPOXY ANCHOR BOLT SYSTEM WHERE FIELD DRILL IS PERMITTED ON THE CONCRETE FOUNDATION. IF USED, THE EPOXY SHALL MEET THE CONSTRUCTION GRADE AS APPROVED BY THE ENGINEER.
9. CONDUIT DESIGNATED FOR POWER SHALL CONTAIN (1) #6 AWG. GROUNDING WIRE THAT IS CONNECTED TO A GROUND WIRE IN A JUNCTION BOX LOCATED IN THE GROUND OFF THE BRIDGE. REFER TO SHEET 15(9B) FOR WIRING DETAILS.
10. CENTER GATE HOUSING ON TOP LOCAL PORTION OF THE MEDIAN SUPPORT.
11. AN EXPANSION JOINT WITH PREFORMED EXPANSION JOINT FILL MATERIAL CONFORMING TO SECTION 212 SHALL BE PLACED BETWEEN THE GATE FOUNDATION AND THE ADJACENT CONCRETE BARRIER.

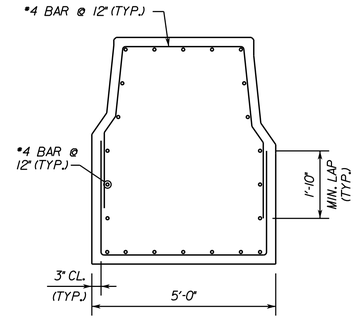

SECTION A-A

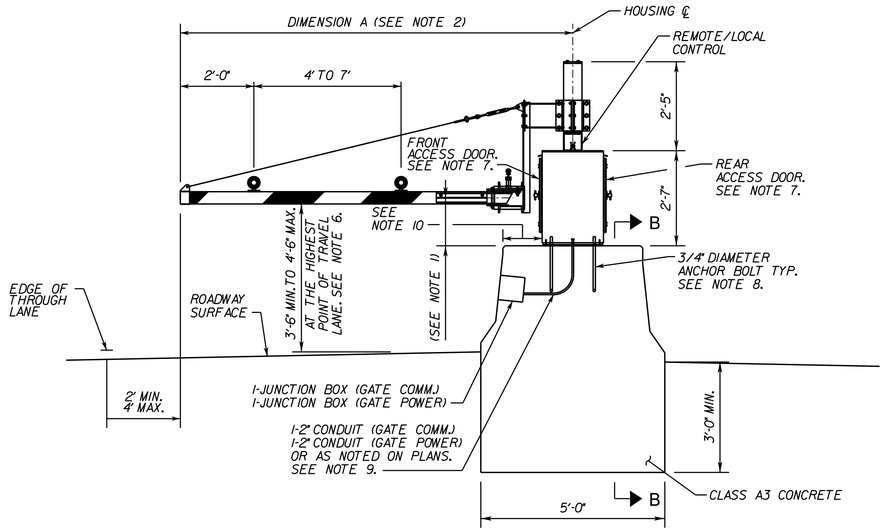

SECTION VIEW

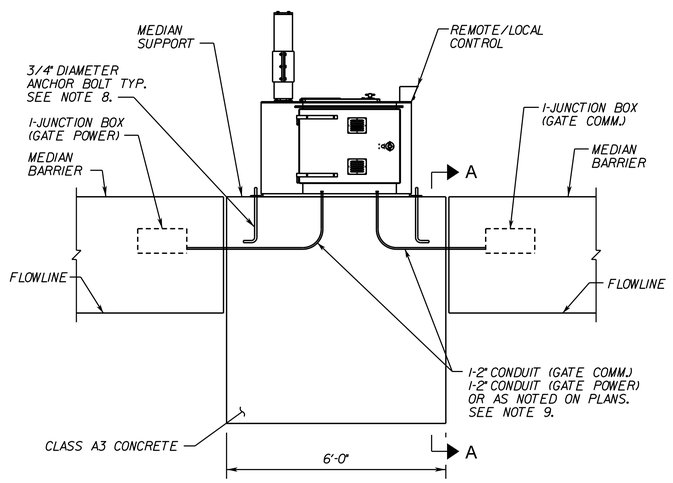

END VIEW

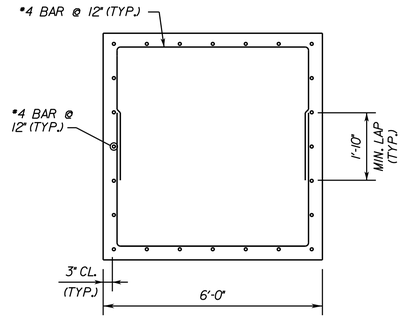

SECTION B-B

AFC PLANS

REVISED	STATE	STATE ROUTE	STATE PROJECT	SHEET NO.
	VA.	95	0095-076-299,C-501	15(2B7)

DESIGN FEATURES RELATING TO CONSTRUCTION OR TO REGULATION AND CONTROL OF TRAFFIC MAY BE SUBJECT TO CHANGE AS DEEMED NECESSARY BY THE DEPARTMENT

COMMONWEALTH OF VIRGINIA
JEFFREY D. CHENG
Lic. No. 051900
PROFESSIONAL ENGINEER

Jeffrey D Cheng
2022.07.20 15:15:26 -04'00'

Whitman, Requardt & Associates
Baltimore, Maryland
TRAFFIC ENGINEER

	PROJECT	SHEET NO.
	0095-076-299	15(2B7)

Cell Revised 12/11/12

LIMITED ACCESS HIGHWAY

By Resolution of the Highway Commission dated October 4, 1956.
By Resolution of the Highway Commission dated January 18, 1973.
By Resolution of the Commonwealth Transportation Board dated April 19, 2022

PROJECT MANAGER: Rimpal Shah, P.E. (703) 259-2362 (NOVA District) _____
SURVEYED BY, DATE: H&B Surveying and Mapping, LLC (804) 330-3781, 03/09/2021
DESIGN BY: Whitman, Requardt & Associates, LLP (804) 212-8700 _____
SUBSURFACE UTILITY BY, DATE: Accutark, Inc. (804) 550-7740, 07/07/2021

MAINTENANCE AREA FOR GATE BETWEEN BARRIER - TYPE A (GATE ARM ON LOW SIDE)

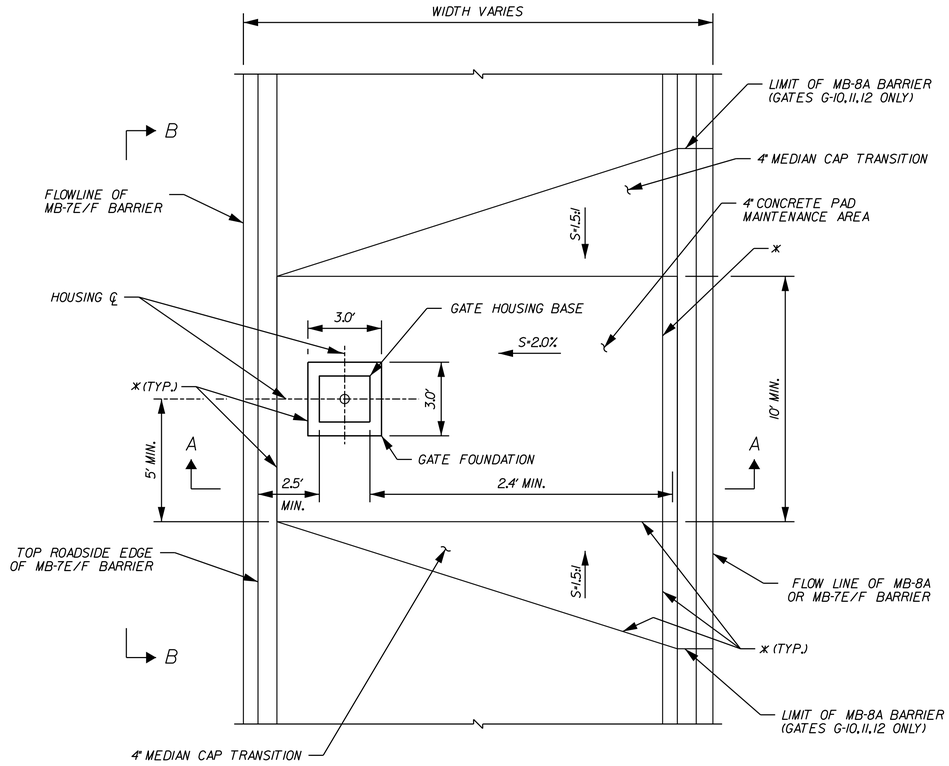

PLAN

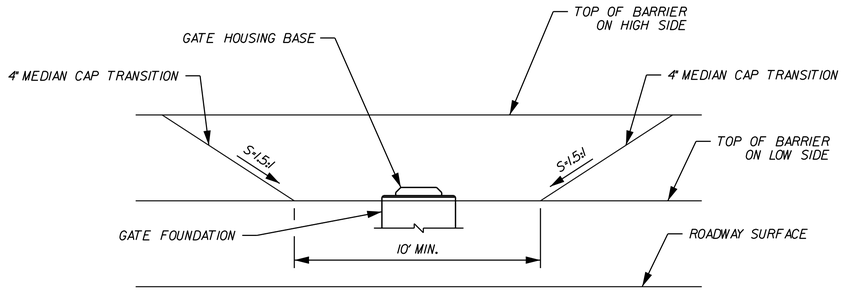

SECTION B-B

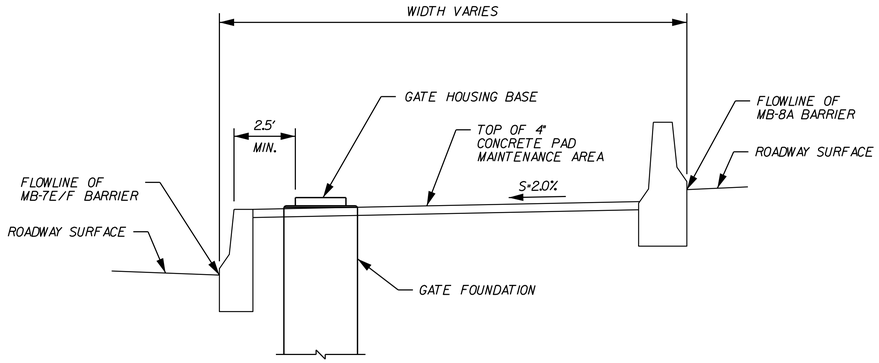

SECTION A-A AT MB-8A

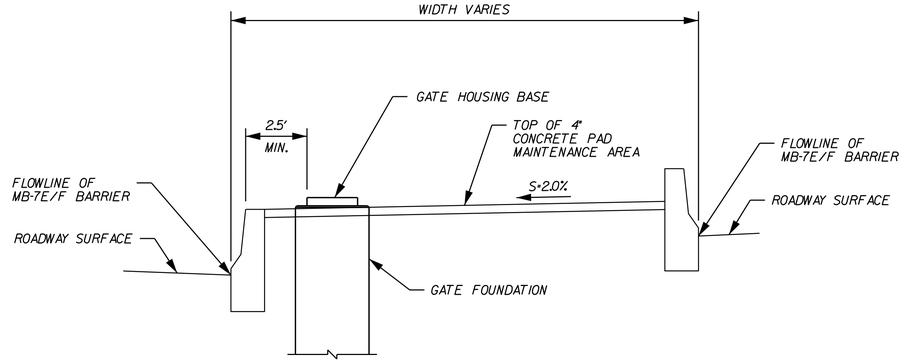

SECTION A-A AT MB-7E/F

NOTES:

1. THE CONTRACTOR SHALL STAKEOUT AND SUBMIT MAINTENANCE AREA SITE LAYOUT PLANS FOR APPROVAL PRIOR TO INSTALLATION.
2. PREFORMED EXPANSION JOINT FILLER MATERIAL SHALL BE PLACED BETWEEN THE CONCRETE JOINTS MARKED WITH A *.
3. PREFORMED EXPANSION JOINT FILLER MATERIAL SHALL CONFORM TO SECTION 212.
4. ALL CONCRETE FOR MAINTENANCE AREA SHALL BE CLASS A3.

COMMONWEALTH OF VIRGINIA
JEFFREY D. CHENG
Lic. No. 051900
PROFESSIONAL ENGINEER

Jeffrey D Cheng
2022.07.20 15:15:50 -04'00'

Whitman, Requardt & Associates
Baltimore, Maryland
TRAFFIC ENGINEER

REVISED	STATE	STATE ROUTE	STATE PROJECT	SHEET NO.
	VA.	95	0095-076-299,C-501	15(2B8)

DESIGN FEATURES RELATING TO CONSTRUCTION OR TO REGULATION AND CONTROL OF TRAFFIC MAY BE SUBJECT TO CHANGE AS DEEMED NECESSARY BY THE DEPARTMENT

AFC PLANS

	PROJECT	SHEET NO.
	0095-076-299	15(2B8)

7/18/2022 4589300101S(02B9).dgn
7:9:47 PM Plotted By: kfisher

LIMITED ACCESS HIGHWAY

By Resolution of the Highway Commission dated October 4, 1956.
By Resolution of the Highway Commission dated January 18, 1973.
By Resolution of the Commonwealth Transportation Board dated April 19, 2022

PROJECT MANAGER: Rimpal Shah, P.E. (703) 259-2362 (NOVA District) _____
SURVEYED BY, DATE: H&B Surveying and Mapping, LLC (804) 330-3781, 03/09/2021
DESIGN BY: Whitman, Requardt & Associates, LLP (804) 212-8700 _____
SUBSURFACE UTILITY BY, DATE: Accutark, Inc. (804) 550-7740, 07/07/2021

COMMONWEALTH OF VIRGINIA
JEFFREY D. CHENG
Lic. No. 051900
PROFESSIONAL ENGINEER

Jeffrey D Cheng
2022.07.20 15:16:15 -04'00'

Whitman, Requardt & Associates
Baltimore, Maryland
TRAFFIC ENGINEER

REVISED	STATE	STATE ROUTE	STATE PROJECT	SHEET NO.
	VA.	95	0095-076-299,C-501	15(2B9)

DESIGN FEATURES RELATING TO CONSTRUCTION OR TO REGULATION AND CONTROL OF TRAFFIC MAY BE SUBJECT TO CHANGE AS DEEMED NECESSARY BY THE DEPARTMENT

MAINTENANCE AREA FOR GATE BETWEEN BARRIER - TYPE B (GATE ARM ON HIGH SIDE)

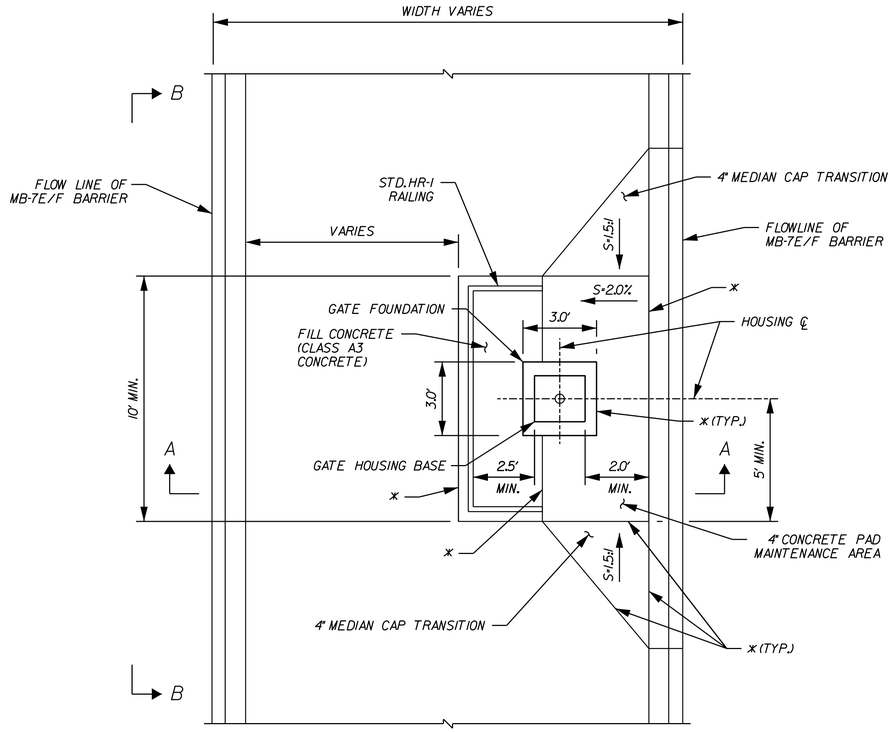

PLAN

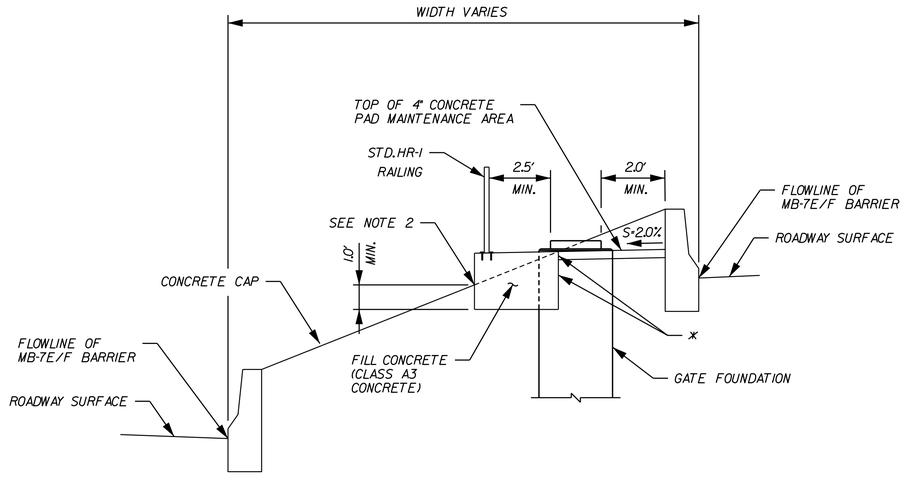

SECTION A-A

NOTES:

1. THE CONTRACTOR SHALL STAKEOUT AND SUBMIT MAINTENANCE AREA SITE LAYOUT PLANS FOR APPROVAL PRIOR TO INSTALLATION.
2. PREFORMED EXPANSION JOINT FILLER MATERIAL SHALL BE PLACED BETWEEN THE CONCRETE JOINTS MARKED WITH A *.
3. PREFORMED EXPANSION JOINT FILLER MATERIAL SHALL CONFORM TO SECTION 212.
4. ALL CONCRETE FOR MAINTENANCE AREA SHALL BE CLASS A3.

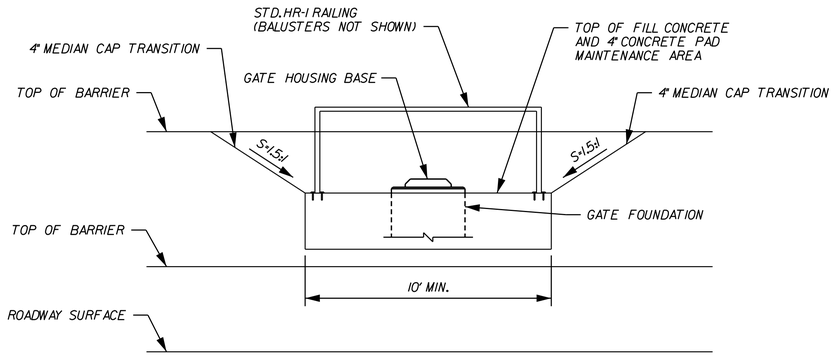

SECTION B-B

AFC PLANS

	PROJECT	SHEET NO.
	0095-076-299	15(2B9)

Cell Revised 12/11/12

7/18/2022 4589300101S(02B10).dgn
7:19:49 PM Plotted By: kfisher

LIMITED ACCESS HIGHWAY

By Resolution of the Highway Commission dated October 4, 1956.
By Resolution of the Highway Commission dated January 18, 1973.
By Resolution of the Commonwealth Transportation Board dated April 19, 2022

PROJECT MANAGER: Rimpal Shah, P.E. (703) 259-2362 (NOVA District) _____
SURVEYED BY, DATE: H&B Surveying and Mapping, LLC (804) 330-3781, 03/09/2021
DESIGN BY: Whitman, Requardt, & Associates, LLP (804) 212-8700 _____.
SUBSURFACE UTILITY BY, DATE: Accumark, Inc. (804) 550-7740, 07/07/2021

GATE CONTROL WIRING DIAGRAM

COMMONWEALTH OF VIRGINIA
JEFFREY D. CHENG
Lic. No. 051900
PROFESSIONAL ENGINEER

Jeffrey D Cheng
2022.07.20 15:16:41 -04'00'

Whitman, Requardt & Associates
Baltimore, Maryland
TRAFFIC ENGINEER

REVISED	STATE	STATE ROUTE	STATE PROJECT	SHEET NO.
	VA.	95	0095-076-299,C-501	15(2B10)

DESIGN FEATURES RELATING TO CONSTRUCTION OR TO REGULATION AND CONTROL OF TRAFFIC MAY BE SUBJECT TO CHANGE AS DEEMED NECESSARY BY THE DEPARTMENT

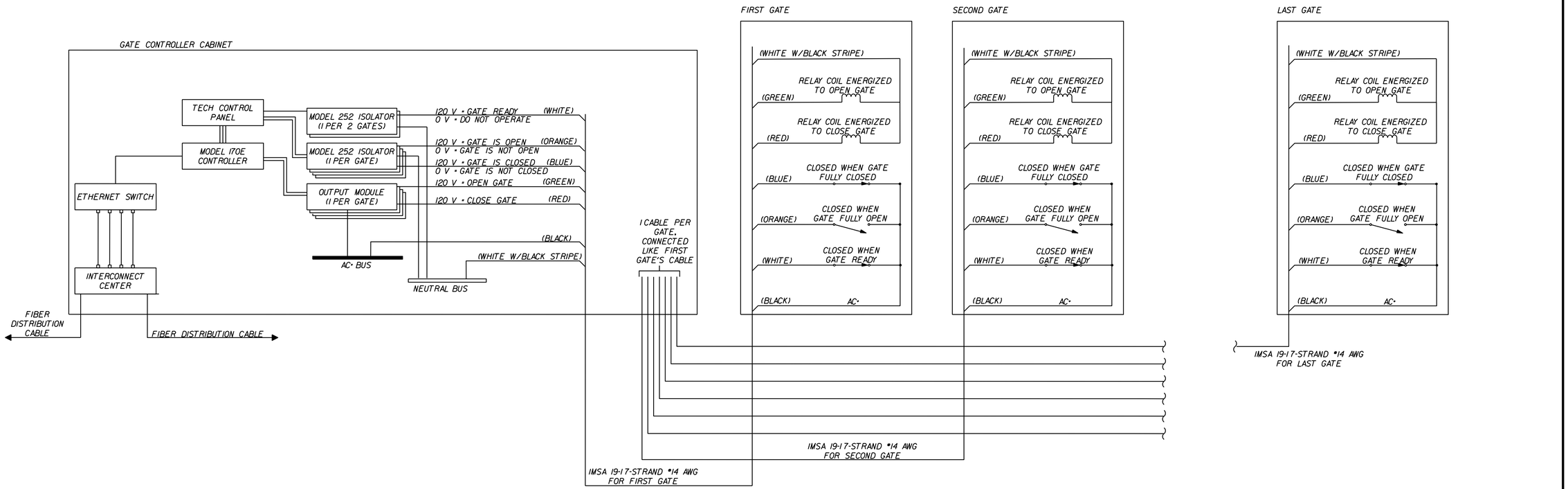

AFC PLANS

N.T.S.	PROJECT 0095-076-299	SHEET NO. 15(2B10)

7/18/2022 4589300101S(02BII).dgn
7:19:53 PM Plotted By: kfisher

LIMITED ACCESS HIGHWAY By Resolution of the Highway Commission dated October 4, 1956.
By Resolution of the Highway Commission dated January 18, 1973.
By Resolution of the Commonwealth Transportation Board dated April 19, 2022

PROJECT MANAGER Rimpal Shah, P.E. (703) 259-2362 (NOVA District) _____
SURVEYED BY, DATE B&B Surveying and Mapping, LLC (804) 330-3781, 03/09/2021
DESIGN BY Whitman, Requardt, & Associates, LLP (804) 212-8700 _____
SUBSURFACE UTILITY BY, DATE Accutark, Inc. (804) 550-7740, 07/07/2021

GATE POWER WIRING DIAGRAM

GATE TRANSFORMER PHASE ASSIGNMENT				
GATE GROUP	GATE POSITION (LOOKING NORTH)	480V, 3Ø		
		A	B	C
SLIP RAMP C095HLI56IG	FIRST	X	X	
	SECOND		X	X
	THIRD	X		X
	FOURTH	X	X	
	FIFTH		X	X
	SIXTH	X		X
	SEVENTH	X	X	
	EIGHTH		X	X
	NINTH	X		X

GATE TRANSFORMER PHASE ASSIGNMENT				
GATE GROUP	GATE POSITION (LOOKING NORTH)	480V, 3Ø		
		A	B	C
SLIP RAMP C095HLI565G	FIRST	X	X	
	SECOND		X	X
	THIRD	X		X
	FOURTH	X	X	
	FIFTH		X	X
	SIXTH	X		X
	SEVENTH	X	X	
	EIGHTH		X	X
	NINTH	X		X
	TENTH	X	X	
	ELEVENTH		X	X

GATE TRANSFORMER PHASE ASSIGNMENT				
GATE GROUP	GATE POSITION (LOOKING EAST)	480V, 3Ø		
		A	B	C
OPITZ BLVD C2000XR0001G	FIRST	X	X	
	SECOND		X	X
	THIRD	X		X
	FOURTH	X	X	
	FIFTH		X	X
	SIXTH	X		X
	SEVENTH	X	X	

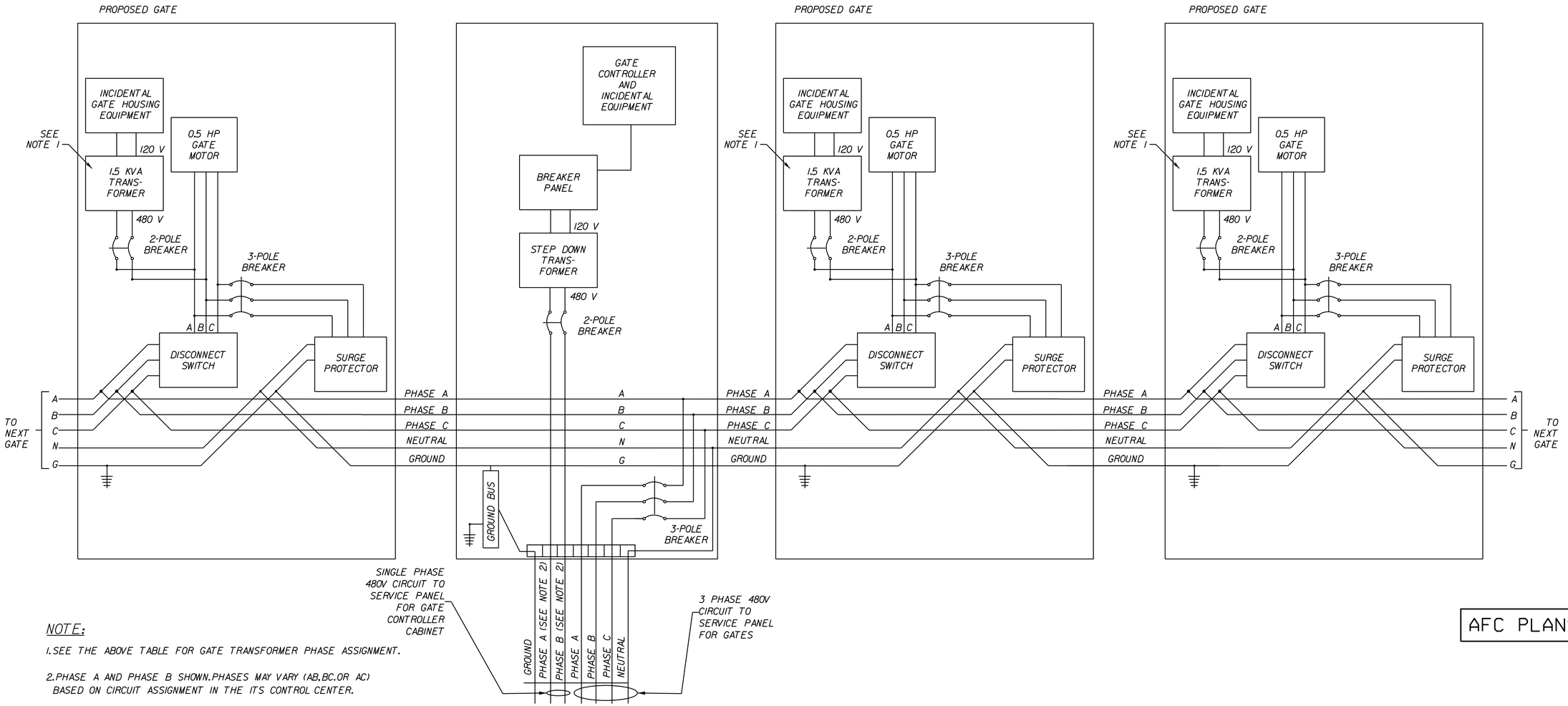

NOTE:

1. SEE THE ABOVE TABLE FOR GATE TRANSFORMER PHASE ASSIGNMENT.

2. PHASE A AND PHASE B SHOWN. PHASES MAY VARY (AB, BC, OR AC) BASED ON CIRCUIT ASSIGNMENT IN THE ITS CONTROL CENTER.

COMMONWEALTH OF VIRGINIA
JEFFREY D. CHENG
Lic. No. 051900
PROFESSIONAL ENGINEER

Jeffrey D Cheng
2022.07.20 15:17:07 -04'00'

Whitman, Requardt & Associates
Baltimore, Maryland
TRAFFIC ENGINEER

REVISED	STATE	STATE ROUTE	STATE PROJECT	SHEET NO.
	VA.	95	0095-076-299,C-501	15(2BII)

DESIGN FEATURES RELATING TO CONSTRUCTION OR TO REGULATION AND CONTROL OF TRAFFIC MAY BE SUBJECT TO CHANGE AS DEEMED NECESSARY BY THE DEPARTMENT

AFC PLANS

N.T.S.	PROJECT 0095-076-299	SHEET NO. 15(2BII)

Cell Revised 12/11/12

7/18/2022 4589300101S(02B12).dgn
7:20:44 PM Plotted By: kfisher

LIMITED ACCESS HIGHWAY By Resolution of the Highway Commission dated October 4, 1956.
By Resolution of the Highway Commission dated January 18, 1973
By Resolution of the Commonwealth Transportation Board dated April 19, 2022

PROJECT MANAGER Rimpal Shah, P.E. (703) 259-2362 (NOVA District) _____
SURVEYED BY, DATE H&B Surveying and Mapping, LLC (804) 330-3781, 03/09/2021
DESIGN BY Whitman, Requardt, & Associates, LLP (804) 212-8700 _____.
SUBSURFACE UTILITY BY, DATE Accumark, Inc. (804) 550-7740, 07/07/2021

COMMONWEALTH OF VIRGINIA
JEFFREY D. CHENG
Lic. No. 051900
PROFESSIONAL ENGINEER

Jeffrey D Cheng
2022.07.20 15:17:53 -04'00'

Whitman, Requardt & Associates
Baltimore, Maryland
TRAFFIC ENGINEER

REVISED	STATE	STATE ROUTE	STATE PROJECT	SHEET NO.
	VA.	95	0095-076-299,C-501	15(2B12)

DESIGN FEATURES RELATING TO CONSTRUCTION OR TO REGULATION AND CONTROL OF TRAFFIC MAY BE SUBJECT TO CHANGE AS DEEMED NECESSARY BY THE DEPARTMENT

GATE G-01
STA. 10+20, RAMP DBSR CONST. ℄

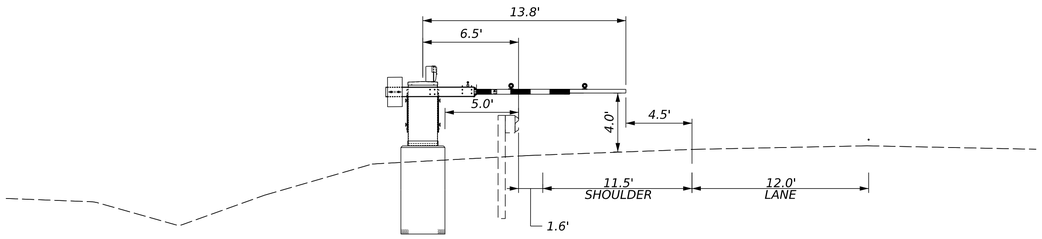

GATE G-02
STA. 12+05, RAMP DBSR CONST. ℄

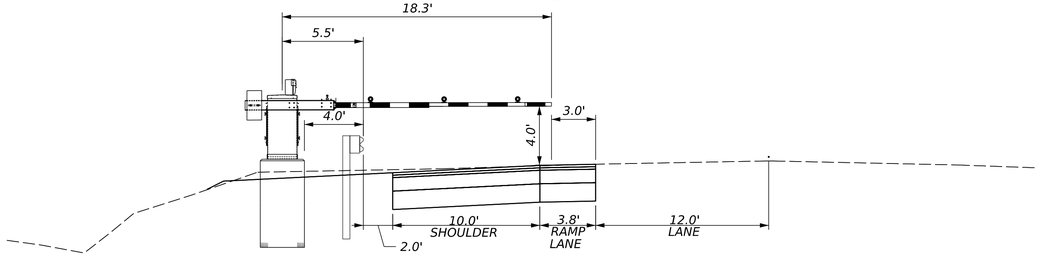

GATE G-03
STA. 13+80, RAMP DBSR CONST. ℄

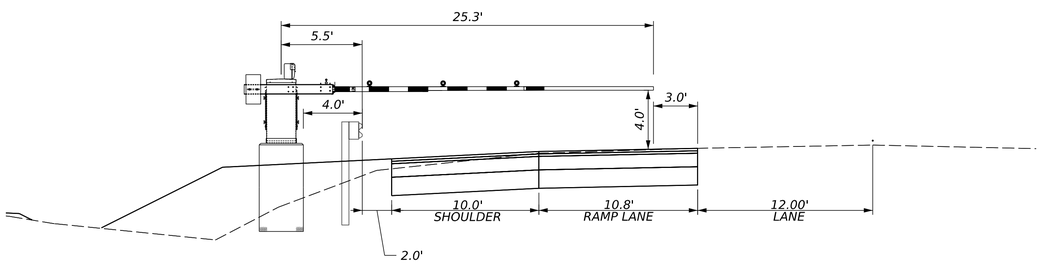

GATE G-04
STA. 15+55, RAMP DBSR CONST. ℄

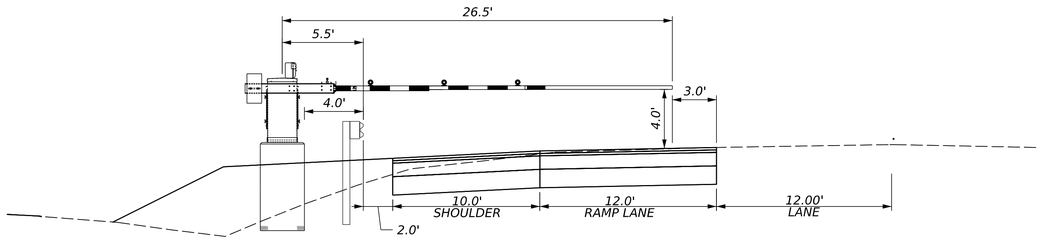

AFC PLANS

NOTES:

1. REFER TO SHEETS 15(2B2)-15(2B6) FOR ADDITIONAL GATE INSTALLATION DETAILS. DIMENSIONS FOR VERTICAL AND LATERAL CLEARANCE OF GATE ARM ARE BASIS OF DESIGN. ALL CLEARANCES SHALL BE WITHIN THE TOLERANCES SPECIFIED ON SHEETS 15(2B2)-15(2B7) AND SHALL BE VERIFIED BY THE CONTRACTOR.

PROJECT	SHEET NO.
0095-076-299	15(2B12)

Cell Revised 12/11/12

7/18/2022 4589300101S(02B13).dgn
7:21:02 PM Plotted By: kfisher

LIMITED ACCESS HIGHWAY

By Resolution of the Highway Commission dated October 4, 1956.
By Resolution of the Highway Commission dated January 18, 1973.
By Resolution of the Commonwealth Transportation Board dated April 19, 2022

PROJECT MANAGER Rimpal Shah, P.E. (703) 259-2362 (NOVA District) _____
SURVEYED BY, DATE H&B Surveying and Mapping, LLC (804) 330-3781, 03/09/2021
DESIGN BY Whitman, Requardt, & Associates, LLP (804) 212-8700 _____.
SUBSURFACE UTILITY BY, DATE Accumark, Inc. (804) 550-7740, 07/07/2021

COMMONWEALTH OF VIRGINIA
JEFFREY D. CHENG
Lic. No. 051900
PROFESSIONAL ENGINEER

Jeffrey D Cheng
2022.07.20 15:20:26 -04'00'

Whitman, Requardt & Associates
Baltimore, Maryland
TRAFFIC ENGINEER

REVISED	STATE	STATE ROUTE	STATE PROJECT	SHEET NO.
	VA.	95	0095-076-299,C-501	15(2B13)

DESIGN FEATURES RELATING TO CONSTRUCTION OR TO REGULATION AND CONTROL OF TRAFFIC MAY BE SUBJECT TO CHANGE AS DEEMED NECESSARY BY THE DEPARTMENT

GATE G-05
STA. 17+40, RAMP DBSR CONST. ℄

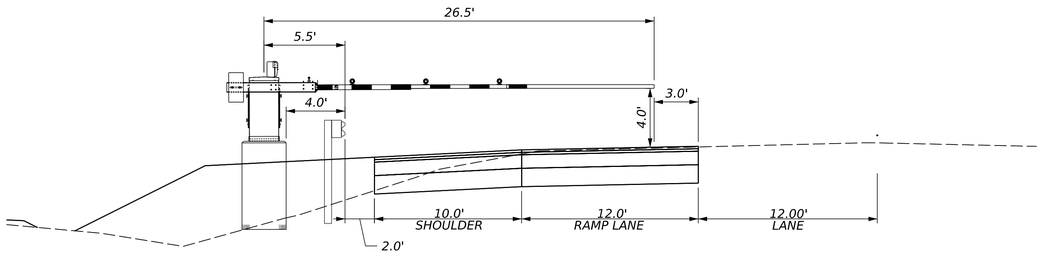

GATE G-06
STA. 19+25, RAMP DBSR CONST. ℄

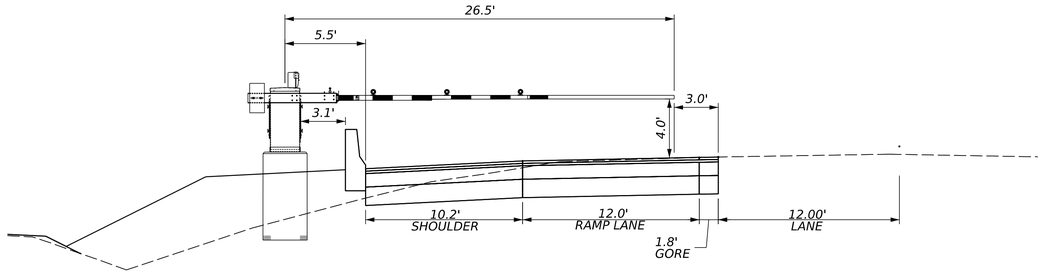

GATE G-07
STA. 20+80, RAMP DBSR CONST. ℄

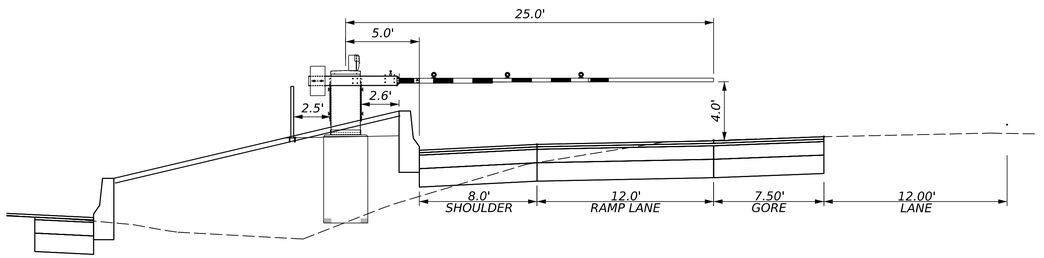

GATE G-08
STA. 22+30, RAMP DBSR CONST. ℄

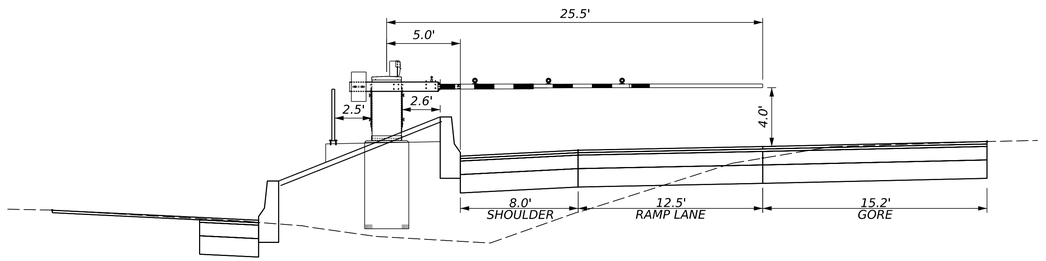

AFC PLANS

NOTES:

1. REFER TO SHEETS 15(2B2)-15(2B6) FOR ADDITIONAL GATE INSTALLATION DETAILS. DIMENSIONS FOR VERTICAL AND LATERAL CLEARANCE OF GATE ARM ARE BASIS OF DESIGN. ALL CLEARANCES SHALL BE WITHIN THE TOLERANCES SPECIFIED ON SHEETS 15(2B2)-15(2B7) AND SHALL BE VERIFIED BY THE CONTRACTOR.

	PROJECT	SHEET NO.
	0095-076-299	15(2B13)

Cell Revised 12/11/12

7/18/2022 4589300101S(02B14).dgn
7:21:29 PM Plotted By: kfisher

LIMITED ACCESS HIGHWAY

By Resolution of the Highway Commission dated October 4, 1956.
By Resolution of the Highway Commission dated January 18, 1973.
By Resolution of the Commonwealth Transportation Board dated April 19, 2022

PROJECT MANAGER Rimpal Shah, P.E. (703) 259-2362 (NOVA District) _____
SURVEYED BY, DATE H&B Surveying and Mapping, LLC (804) 330-3781, 03/09/2021
DESIGN BY Whitman, Requardt, & Associates, LLP (804) 212-8700 _____.
SUBSURFACE UTILITY BY, DATE Accumark, Inc. (804) 550-7740, 07/07/2021

COMMONWEALTH OF VIRGINIA
JEFFREY D. CHENG
Lic. No. 051900
PROFESSIONAL ENGINEER

Jeffrey D Cheng
2022.07.20 15:20:55 -04'00'

Whitman, Requardt & Associates
Baltimore, Maryland
TRAFFIC ENGINEER

REVISED	STATE	STATE ROUTE	STATE PROJECT	SHEET NO.
	VA.	95	0095-076-299,C-501	15(2B14)

DESIGN FEATURES RELATING TO CONSTRUCTION OR TO REGULATION AND CONTROL OF TRAFFIC MAY BE SUBJECT TO CHANGE AS DEEMED NECESSARY BY THE DEPARTMENT

GATE G-09
STA. 23+55, RAMP DBSR CONST. ℄

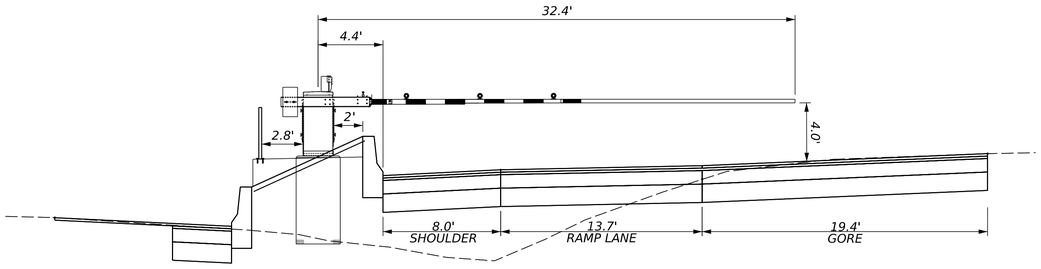

GATE G-10
STA. 27+15, RAMP DBSR CONST. ℄

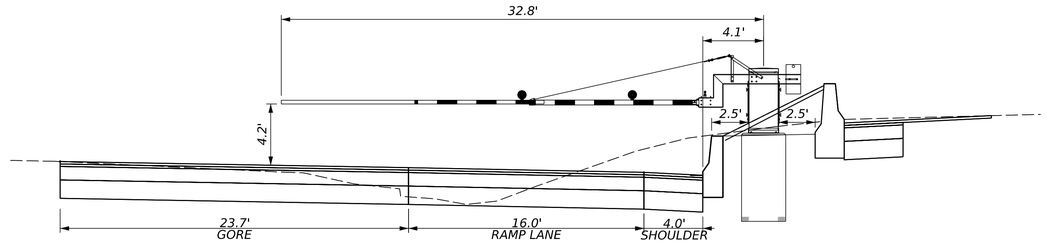

GATE G-11
STA. 28+40, RAMP DBSR CONST. ℄

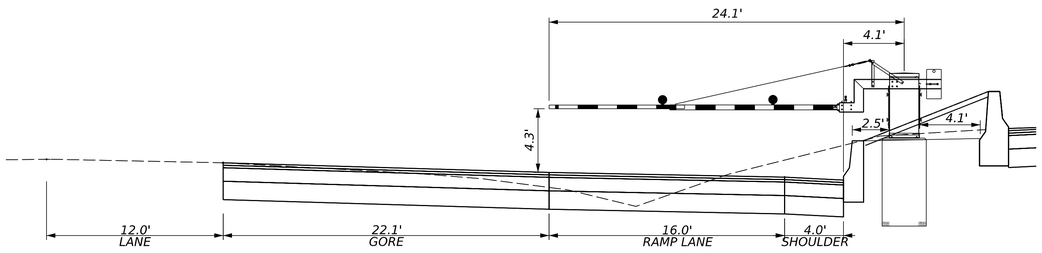

GATE G-12
STA. 29+90, RAMP DBSR CONST. ℄

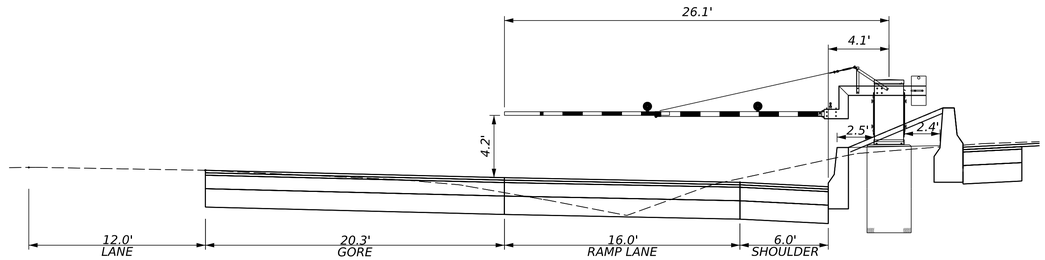

NOTES:

1. REFER TO SHEETS 15(2B2)-15(2B6) FOR ADDITIONAL GATE INSTALLATION DETAILS. DIMENSIONS FOR VERTICAL AND LATERAL CLEARANCE OF GATE ARM ARE BASIS OF DESIGN. ALL CLEARANCES SHALL BE WITHIN THE TOLERANCES SPECIFIED ON SHEETS 15(2B2)-15(2B7) AND SHALL BE VERIFIED BY THE CONTRACTOR.

AFC PLANS

	PROJECT	SHEET NO.
	0095-076-299	15(2B14)

Cell Revised 12/11/12

7/18/2022 4589300101S(02B15).dgn
7:21:49 PM Plotted By: kfisher

LIMITED ACCESS HIGHWAY

By Resolution of the Highway Commission dated October 4, 1956.
By Resolution of the Highway Commission dated January 18, 1973.
By Resolution of the Commonwealth Transportation Board dated April 19, 2022

PROJECT MANAGER Rimpal Shah, P.E. (703) 259-2362 (NOVA District) _____
SURVEYED BY, DATE H&B Surveying and Mapping, LLC (804) 330-3781, 03/09/2021
DESIGN BY Whitman, Requardt, & Associates, LLP (804) 212-8700 _____.
SUBSURFACE UTILITY BY, DATE Accumark, Inc. (804) 550-7740, 07/07/2021

COMMONWEALTH OF VIRGINIA
JEFFREY D. CHENG
Lic. No. 051900
PROFESSIONAL ENGINEER

Jeffrey D Cheng
2022.07.20 15:21:26 -04'00'

Whitman, Requardt & Associates
Baltimore, Maryland
TRAFFIC ENGINEER

REVISED	STATE	STATE ROUTE	STATE PROJECT	SHEET NO.
	VA.	95	0095-076-299,C-501	15(2B15)

DESIGN FEATURES RELATING TO CONSTRUCTION OR TO REGULATION AND CONTROL OF TRAFFIC MAY BE SUBJECT TO CHANGE AS DEEMED NECESSARY BY THE DEPARTMENT

GATE G-13
STA. 31+65, RAMP DBSR CONST. ℄

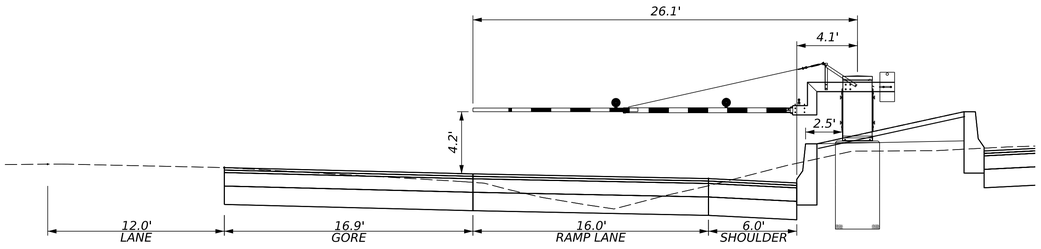

GATE G-14
STA. 33+40, RAMP DBSR CONST. ℄

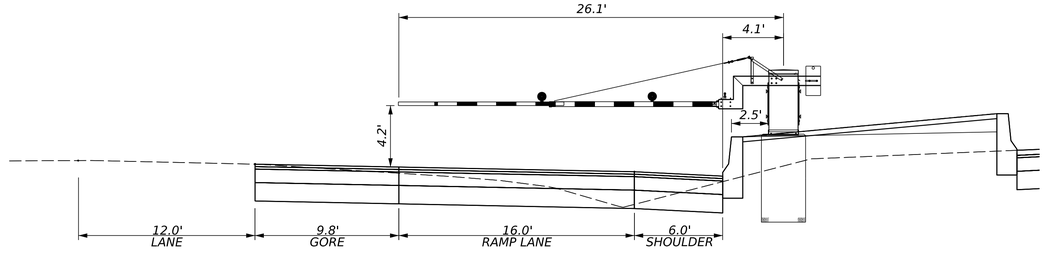

GATE G-15
STA. 35+15, RAMP DBSR CONST. ℄

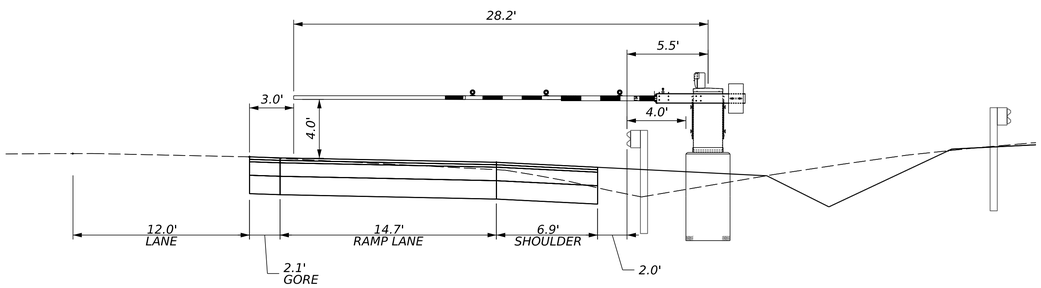

GATE G-16
STA. 37+15, RAMP DBSR CONST. ℄

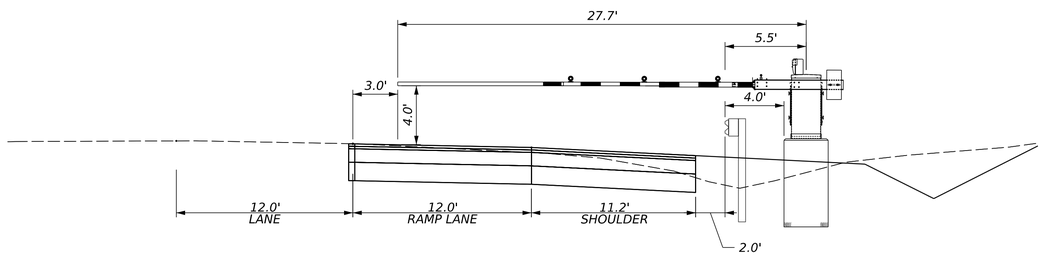

NOTES:

1. REFER TO SHEETS 15(2B2)-15(2B6) FOR ADDITIONAL GATE INSTALLATION DETAILS. DIMENSIONS FOR VERTICAL AND LATERAL CLEARANCE OF GATE ARM ARE BASIS OF DESIGN. ALL CLEARANCES SHALL BE WITHIN THE TOLERANCES SPECIFIED ON SHEETS 15(2B2)-15(2B7) AND SHALL BE VERIFIED BY THE CONTRACTOR.

AFC PLANS

	PROJECT	SHEET NO.
	0095-076-299	15(2B15)

Cell Revised 12/11/12

7/18/2022 4589300101S(02B16).dgn
7:22:11 PM Plotted By: kfisher

LIMITED ACCESS HIGHWAY

By Resolution of the Highway Commission dated October 4, 1956.
By Resolution of the Highway Commission dated January 18, 1973.
By Resolution of the Commonwealth Transportation Board dated April 19, 2022

PROJECT MANAGER Rimpal Shah, P.E. (703) 259-2362 (NOVA District) _____
SURVEYED BY, DATE H&B Surveying and Mapping, LLC (804) 330-3781, 03/09/2021
DESIGN BY Whitman, Requardt, & Associates, LLP (804) 212-8700 _____.
SUBSURFACE UTILITY BY, DATE Accumark, Inc. (804) 550-7740, 07/07/2021

COMMONWEALTH OF VIRGINIA
JEFFREY D. CHENG
Lic. No. 051900
PROFESSIONAL ENGINEER

Jeffrey D Cheng
2022.07.20 15:22:05 -04'00'

Whitman, Requardt & Associates
Baltimore, Maryland
TRAFFIC ENGINEER

REVISED	STATE	STATE ROUTE	STATE PROJECT	SHEET NO.
	VA.	95	0095-076-299,C-501	15(2B16)

DESIGN FEATURES RELATING TO CONSTRUCTION OR TO REGULATION AND CONTROL OF TRAFFIC MAY BE SUBJECT TO CHANGE AS DEEMED NECESSARY BY THE DEPARTMENT

GATE G-17
STA. 39+15, RAMP DBSR CONST. ℄

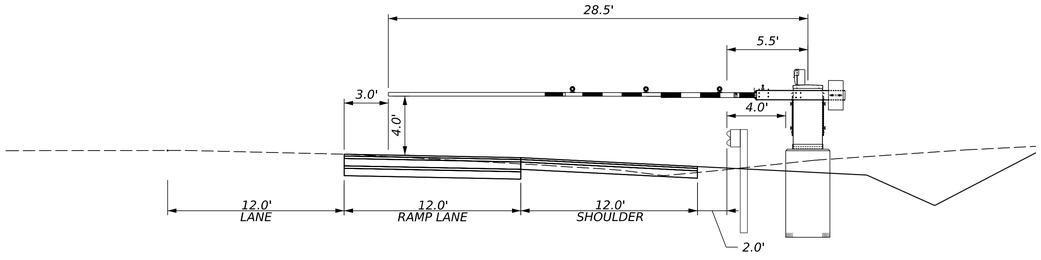

GATE G-18
STA. 41+15, RAMP DBSR CONST. ℄

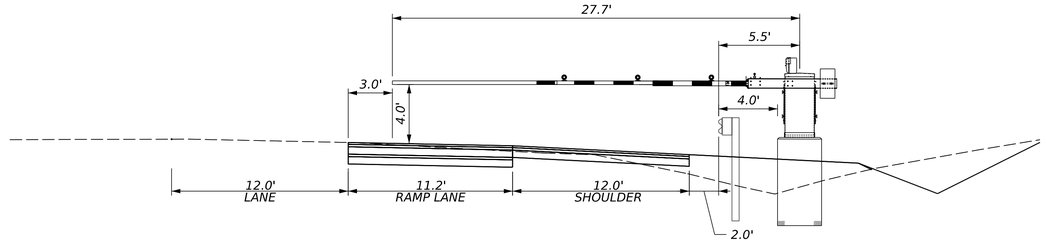

GATE G-19
STA. 43+15, RAMP DBSR CONST. ℄

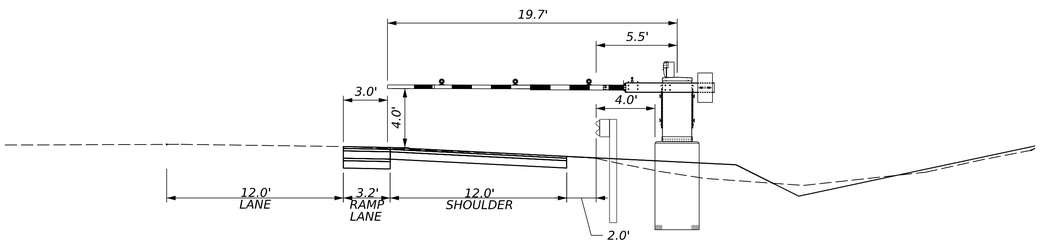

GATE G-20
STA. 343+50, I-95 CONST. ℄

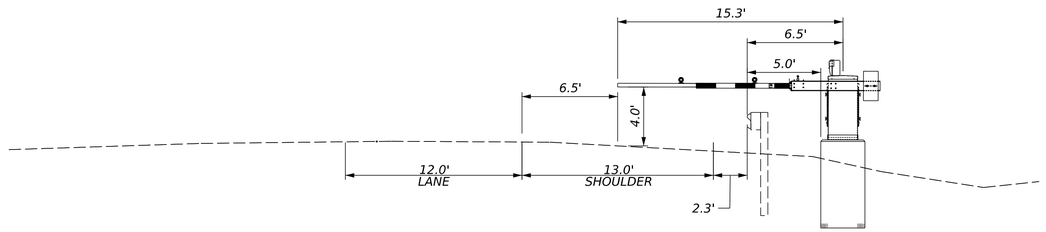

NOTES:

1. REFER TO SHEETS 15(2B2)-15(2B6) FOR ADDITIONAL GATE INSTALLATION DETAILS. DIMENSIONS FOR VERTICAL AND LATERAL CLEARANCE OF GATE ARM ARE BASIS OF DESIGN. ALL CLEARANCES SHALL BE WITHIN THE TOLERANCES SPECIFIED ON SHEETS 15(2B2)-15(2B7) AND SHALL BE VERIFIED BY THE CONTRACTOR.

AFC PLANS

	PROJECT	SHEET NO.
	0095-076-299	15(2B16)

7/18/2022 4589300101S(02B17).dgn
7:22:33 PM Plotted By: kfisher

LIMITED ACCESS HIGHWAY

By Resolution of the Highway Commission dated October 4, 1956.
By Resolution of the Highway Commission dated January 18, 1973.
By Resolution of the Commonwealth Transportation Board dated April 19, 2022

PROJECT MANAGER: Rimpal Shah, P.E. (703) 259-2362 (NOVA District)
SURVEYED BY, DATE: H&B Surveying and Mapping, LLC (804) 330-3781, 03/09/2021
DESIGN BY: Whitman, Requardt, & Associates, LLP (804) 212-8700
SUBSURFACE UTILITY BY, DATE: Accumark, Inc. (804) 550-7740, 07/07/2021

COMMONWEALTH OF VIRGINIA
JEFFREY D. CHENG
Lic. No. 051900
PROFESSIONAL ENGINEER

Jeffrey D Cheng
2022.07.20 15:22:28 -04'00'

Whitman, Requardt & Associates
Baltimore, Maryland
TRAFFIC ENGINEER

REVISED	STATE	STATE ROUTE	STATE PROJECT	SHEET NO.
	VA.	95	0095-076-299,C-501	15(2B17)

DESIGN FEATURES RELATING TO CONSTRUCTION OR TO REGULATION AND CONTROL OF TRAFFIC MAY BE SUBJECT TO CHANGE AS DEEMED NECESSARY BY THE DEPARTMENT

GATE G-21
STA. 64+62, OPITZ BLVD CONST. ℄

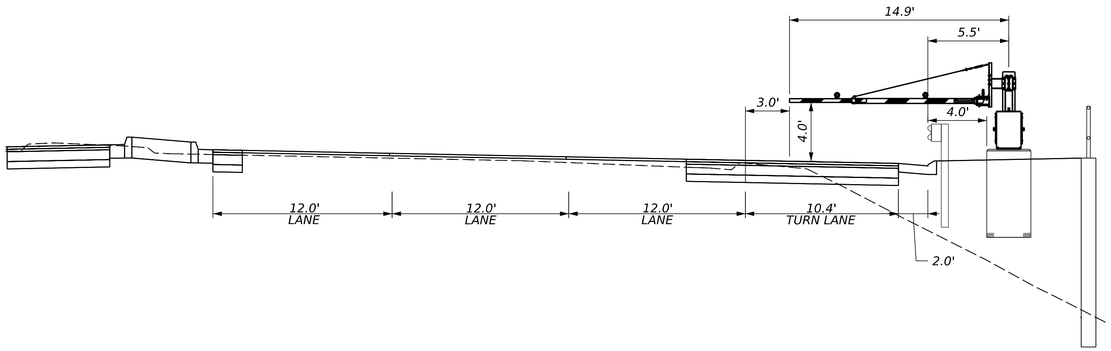

GATE G-22
STA. 65+64, OPITZ BLVD CONST. ℄

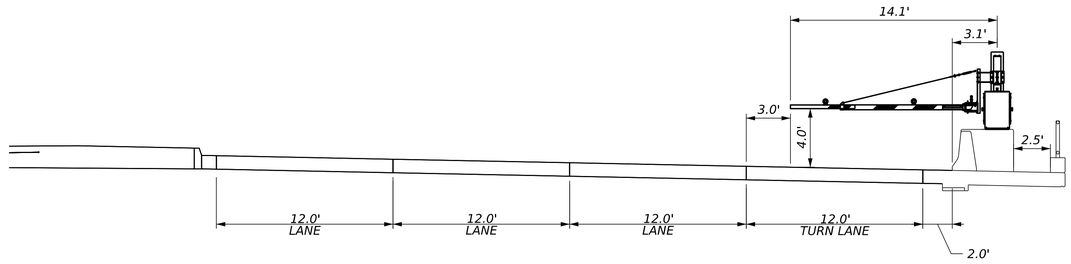

GATE G-23
STA. 66+59, OPITZ BLVD CONST. ℄

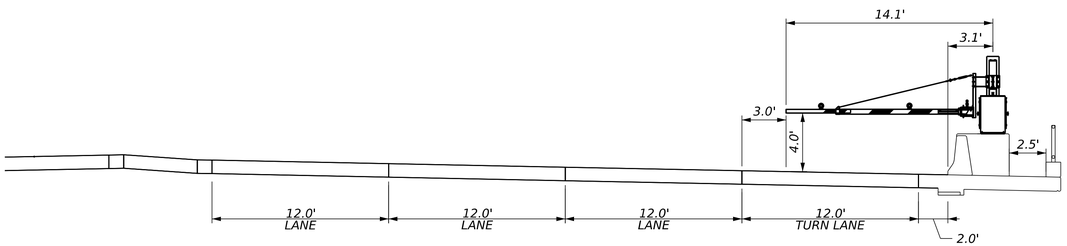

GATE G-24
STA. 68+21, OPITZ BLVD CONST. ℄

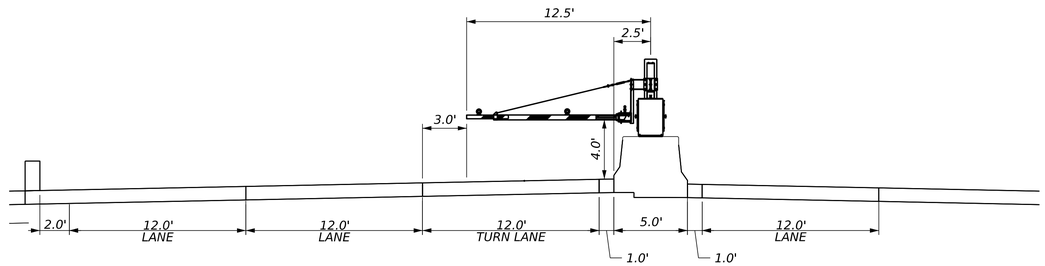

AFC PLANS

NOTES:

1. REFER TO SHEETS 15(2B2)-15(2B7) FOR ADDITIONAL GATE INSTALLATION DETAILS. DIMENSIONS FOR VERTICAL AND LATERAL CLEARANCE OF GATE ARM ARE BASIS OF DESIGN. ALL CLEARANCES SHALL BE WITHIN THE TOLERANCES SPECIFIED ON SHEETS 15(2B2)-15(2B6) AND SHALL BE VERIFIED BY THE CONTRACTOR.

	PROJECT	SHEET NO.
	0095-076-299	15(2B17)

Cell Revised 12/11/12

7/18/2022 4589300101S(02B18).dgn
7:22:53 PM Plotted By: kfisher

LIMITED ACCESS HIGHWAY

By Resolution of the Highway Commission dated October 4, 1956.
By Resolution of the Highway Commission dated January 18, 1973.
By Resolution of the Commonwealth Transportation Board dated April 19, 2022

PROJECT MANAGER: Rimpal Shah, P.E. (703) 259-2362 (NOVA District) _____
SURVEYED BY, DATE: H&B Surveying and Mapping, LLC (804) 330-3781, 03/09/2021
DESIGN BY: Whitman, Requardt, & Associates, LLP (804) 212-8700 _____.
SUBSURFACE UTILITY BY, DATE: Accumark, Inc. (804) 550-7740, 07/07/2021

COMMONWEALTH OF VIRGINIA
JEFFREY D. CHENG
Lic. No. 051900
PROFESSIONAL ENGINEER

Jeffrey D Cheng
2022.07.20 15:22:51 -04'00'

Whitman, Requardt & Associates
Baltimore, Maryland
TRAFFIC ENGINEER

REVISED	STATE	STATE ROUTE	STATE PROJECT	SHEET NO.
	VA.	95	0095-076-299,C-501	15(2B18)

DESIGN FEATURES RELATING TO CONSTRUCTION OR TO REGULATION AND CONTROL OF TRAFFIC MAY BE SUBJECT TO CHANGE AS DEEMED NECESSARY BY THE DEPARTMENT

GATE G-25
STA. 69+21, OPITZ BLVD CONST. ℄

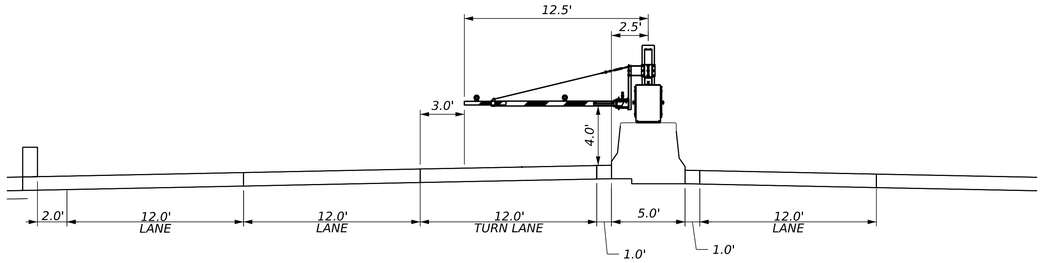

GATE G-26
STA. 70+21, OPITZ BLVD CONST. ℄

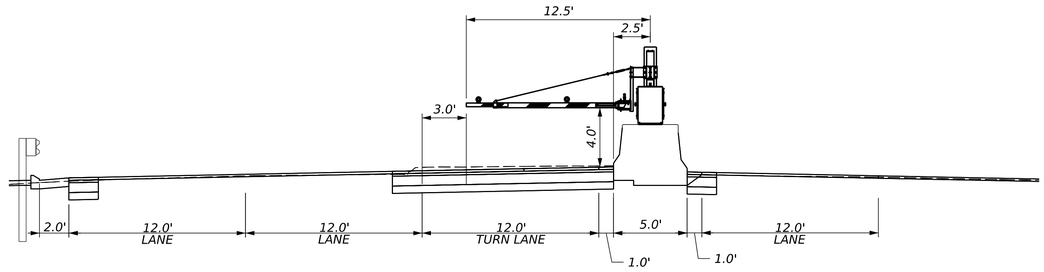

GATE G-27
STA. 71+16, OPITZ BLVD CONST. ℄

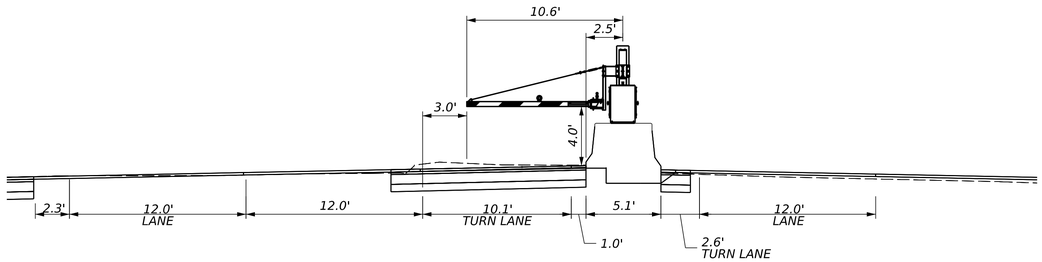

NOTES:

1. REFER TO SHEETS 15(2B2)-15(2B6) FOR ADDITIONAL GATE INSTALLATION DETAILS. DIMENSIONS FOR VERTICAL AND LATERAL CLEARANCE OF GATE ARM ARE BASIS OF DESIGN. ALL CLEARANCES SHALL BE WITHIN THE TOLERANCES SPECIFIED ON SHEETS 15(2B2)-15(2B7) AND SHALL BE VERIFIED BY THE CONTRACTOR.

AFC PLANS

PROJECT	SHEET NO.
0095-076-299	15(2B18)

7/21/2022 4589300101S(02C1).dgn
8:13:02 AM Plotted By: jcheng

LIMITED ACCESS HIGHWAY By Resolution of the Highway Commission dated October 4, 1956.
By Resolution of the Highway Commission dated January 18, 1973.
By Resolution of the Commonwealth Transportation Board dated April 19, 2022

PROJECT MANAGER Rimpal Shah, P.E. (703) 259-2362 (NOVA District)
SURVEYED BY, DATE H&B Surveying and Mapping, LLC (804) 330-3781, 03/09/2021
DESIGN BY Whitman, Requardt, & Associates, LLP (804) 212-8700
SUBSURFACE UTILITY BY, DATE Accumark, Inc. (804) 550-7740, 07/07/2021

COMMONWEALTH OF VIRGINIA
JEFFREY D. CHENG
Lic. No. 051900
PROFESSIONAL ENGINEER

Jeffrey D Cheng
2022.07.21 08:20:13 -04'00'

Whitman, Requardt & Associates
Baltimore, Maryland
TRAFFIC ENGINEER

REVISED	STATE	STATE ROUTE	STATE PROJECT	SHEET NO.
	VA.	95	0095-076-299,C-501	15(2C1)

DESIGN FEATURES RELATING TO CONSTRUCTION OR TO REGULATION AND CONTROL OF TRAFFIC MAY BE SUBJECT TO CHANGE AS DEEMED NECESSARY BY THE DEPARTMENT

GENERATOR H117A SITE PLAN

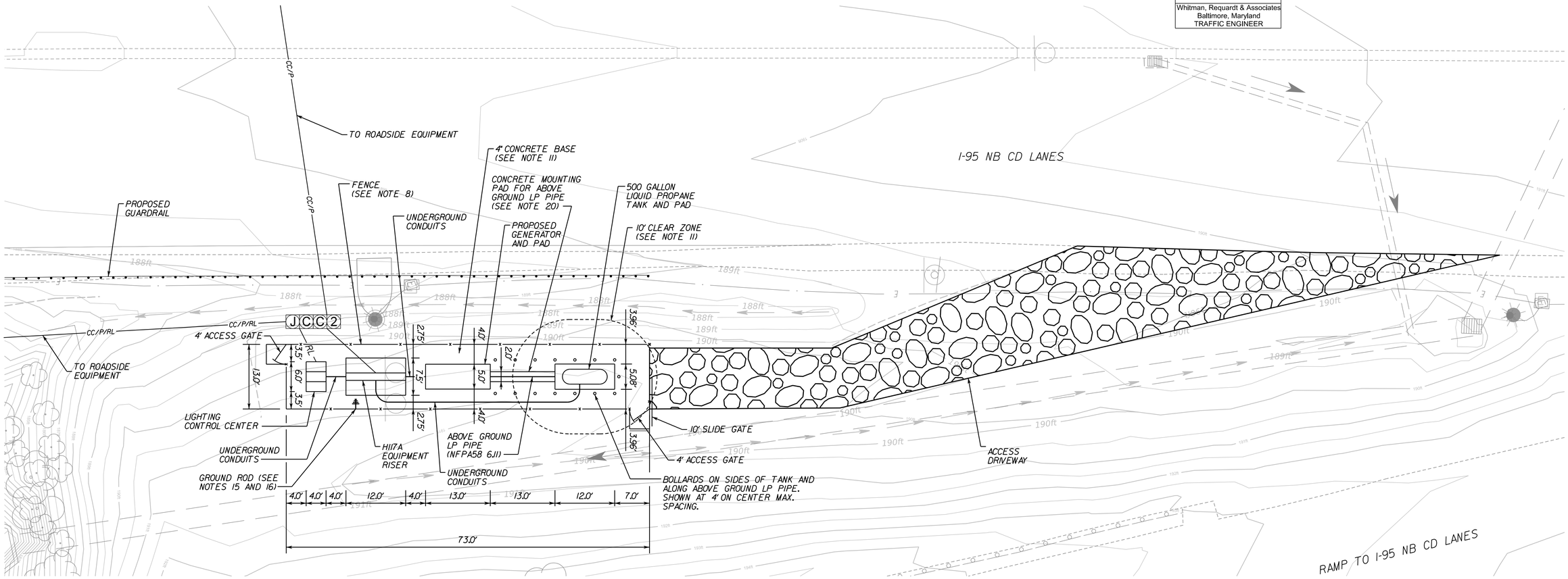

NOTES:

1. ALL WORK SHALL COMPLY WITH SHEET NOTES AND TTMS SPECIAL PROVISIONS SECTION 819.
2. SEE ITS PANEL BOARD SCHEDULES FOR GENERATOR CAPACITY.
3. SEE SERVICE PANEL DETAILS ON SHEET 15(2D2) FOR EQUIPMENT AND CONDUIT ARRANGEMENT.
4. CONTAINER SYSTEM SHALL BE INSTALLED IN ACCORDANCE WITH NFPA58, 2020 EDITION.
5. REFUELING, EMERGENCY, AND MAINTENANCE ACCESS SHALL BE FROM ACCESS PATH FROM I-95 NORTHBOUND CD LANES.
6. FOR PROPANE TANK AND PAD DETAILS REFER TO PROPANE TANK DETAIL, SHEET 15(2C3).
7. PROPANE TANK SHALL BE GROUNDED PER MANUFACTURERS RECOMMENDATION.
8. ENCLOSURE FENCE SHALL BE A MINIMUM OF 6' HIGH INDUSTRIAL-TYPE FENCE, CHAIN LINK FENCE, OR EQUIVALENT PROTECTION WITH INCORPORATED PRIVACY SCREENING MATERIAL. VINYL SLATS SHALL BE INSTALLED FOR PRIVACY FENCE SCREENING AT GENERATOR SITES.
9. ALL EGRESS GATES SHALL BE SECURED BY LOCKS WITH KEYS, APPROVED BY THE CONCESSIONAIRE. CONCESSIONAIRE SHALL MAKE KEYS AVAILABLE TO COMPANY PROVIDING CONTRACTED MAINTENANCE AND APPROPRIATE AGENCIES AND DEPARTMENTS PROVIDING FOR PUBLIC SAFETY.
10. VISIBLE HAZARD IDENTIFICATION SIGNS SHALL BE PLACED IN ACCORDANCE WITH NFPA 704 AND VA STATEWIDE FIRE PREVENTION CODE.
11. OPEN AREA WITHIN THE FENCE AND GATE ACCESS AREAS SHALL BE COVERED WITH 4" CONCRETE BASE OVER 6" OF COMPACTED GRAVEL (AGGREGATE BASE MATERIAL, TYPE I, SIZE 21). A 10' CLEAR ZONE AROUND THE CONTAINER SYSTEM (DISTANCE SHALL BE MEASURED FROM THE EDGE OF THE TANK) SHALL BE COVERED WITH GRAVEL AGGREGATE BASE MATERIAL (TYPE I, SIZE 21, 6 INCH DEPTH).
12. ELECTRICAL EQUIPMENT AND WIRING INSTALLED SHALL BE IN ACCORDANCE WITH NATIONAL ELECTRICAL CODE.
13. THE 95 EXPRESS LANES ENGINEER SHALL BE CONTACTED PRIOR TO FILLING PROPANE TANK TO ARRANGE SITE INSPECTION. CONTAINER SHALL BE FILLED ONLY AFTER DETERMINATION THAT IT COMPLIES WITH THE DESIGN, FABRICATION, INSPECTION, AND MARKING CODES.
14. CONTAINER SITE SHALL MEET REQUIREMENTS FOR "LOW EMISSION TRANSFER SITE" (NFPA 6.7.3.4 AND 6.30.5)
15. INTERCONNECT GENERATOR, SERVICE PANEL AND FENCE GROUND ROD ELECTRODES WITH #2 BARE TINNED SOLID CONDUCTOR. OTHER METALLIC STRUCTURES WITH PATHS TO GROUND SHALL BE CONNECTED TO THE GROUNDING CONDUCTOR IF THEY ARE LOCATED WITHIN 10' OF THE GROUNDING ELECTRODE SYSTEM.
16. INSTALLATION AND TESTING OF THE GROUND RODS SHALL BE IN ACCORDANCE WITH VDOT 2020 ROAD AND BRIDGE SPECIFICATIONS SECTION 700.
17. CONTRACTOR SHALL VERIFY EXISTING UTILITIES PRIOR TO THE INSTALLATION OF ANY EQUIPMENT. CONTRACTOR SHALL IMMEDIATELY NOTIFY ENGINEER OF ANY DISCOVERED CONFLICTS.
18. MAINTAIN A MINIMUM OF 3' CLEARANCE AROUND ALL SIDES OF EACH EQUIPMENT AND 3.5' IN FRONT OF ALL ELECTRICAL EQUIPMENT.
19. SEE SHEET 15(9) FOR GENERATOR SITE LOCATION.
20. INSTALL CONCRETE FOUNDATIONS FOR THE GENERATOR AND LIQUID PROPANE TANK PRIOR TO INSTALLING THE CONCRETE MOUNTING PAD FOR THE ABOVE GROUND LP PIPE. INSTALL 1/2" EXPANDED RUBBER JOINT SEALER BETWEEN THE MOUNTING PAD AND FOUNDATIONS. CENTER THE ABOVE GROUND LP PIPE ON THE MOUNTING PAD.

CROSS REFERENCES:

2B(10)	GENERATOR SITE ROADWAY AND GRADING PLAN
15(2C3)	PROPANE TANK DETAIL
15(2C4)	GENERATOR CONNECTION DIAGRAM
15(2D2)	POWER EQUIPMENT AND SERVICE RISER DETAILS

AFC PLANS

SCALE 0 10' 20'

PROJECT	SHEET NO.
0095-076-299	15(2C1)

Cell Revised 12/11/12

7/21/2022 4589300101S(02C2).dgn
8:4:29 AM Plotted By: jcheng

LIMITED ACCESS HIGHWAY By Resolution of the Highway Commission dated October 4, 1956.
By Resolution of the Highway Commission dated January 18, 1973.
By Resolution of the Commonwealth Transportation Board dated April 19, 2022

PROJECT MANAGER Rimpal Shah, P.E. (703) 259-2362 (NOVA District)
SURVEYED BY, DATE H&B Surveying and Mapping, LLC (804) 330-3781, 03/09/2021
DESIGN BY Whitman, Requardt & Associates, LLP (804) 212-8700
SUBSURFACE UTILITY BY, DATE Accumark, Inc. (804) 550-7740, 07/07/2021

COMMONWEALTH OF VIRGINIA
JEFFREY D. CHENG
Lic. No. 051900
PROFESSIONAL ENGINEER

Jeffrey D Cheng
2022.07.21 08:21:23 -04'00'

Whitman, Requardt & Associates
Baltimore, Maryland
TRAFFIC ENGINEER

REVISED	STATE	STATE ROUTE	STATE PROJECT	SHEET NO.
	VA.	95	0095-076-299,C-501	15(2C2)

DESIGN FEATURES RELATING TO CONSTRUCTION OR TO REGULATION AND CONTROL OF TRAFFIC MAY BE SUBJECT TO CHANGE AS DEEMED NECESSARY BY THE DEPARTMENT

GENERATOR H118A SITE PLAN

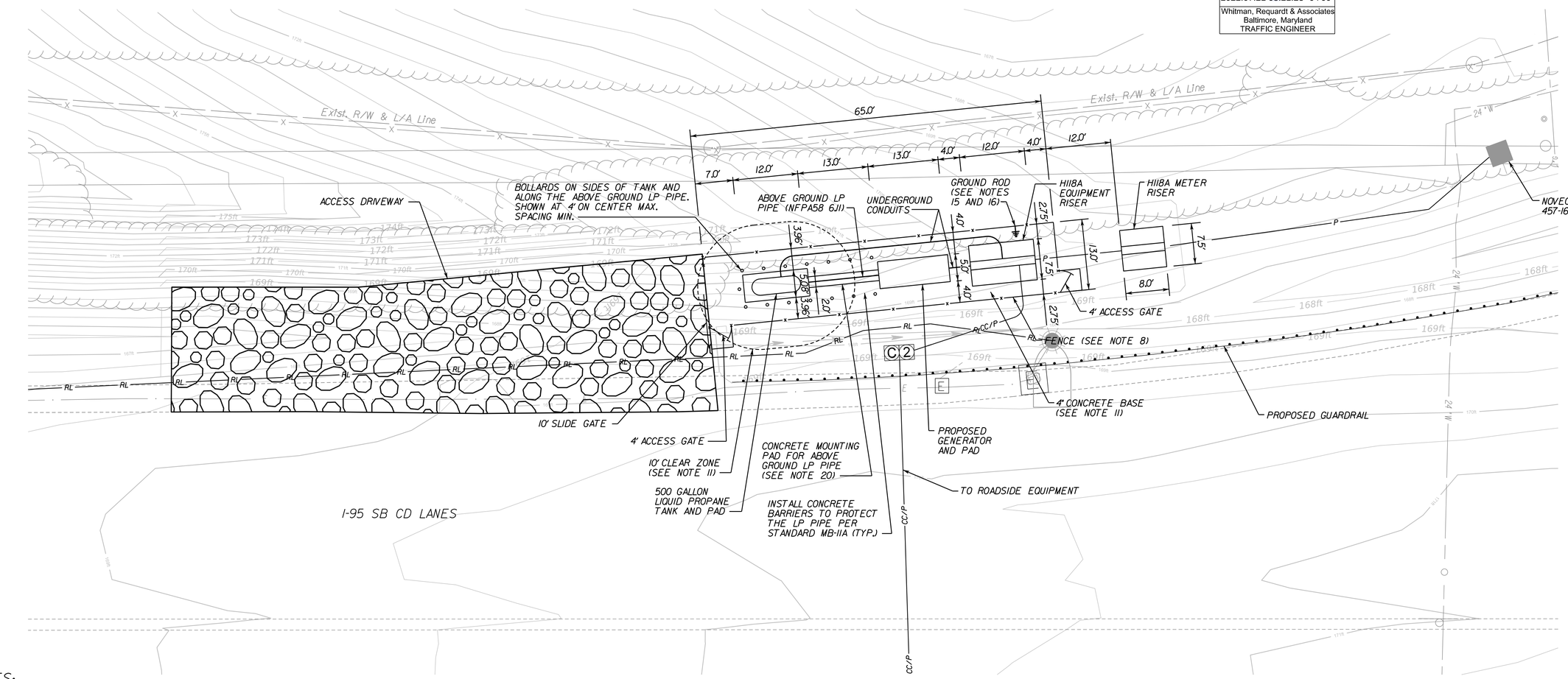

NOTES:

1. ALL WORK SHALL COMPLY WITH SHEET NOTES AND TTMS SPECIAL PROVISIONS SECTION 819.
2. SEE ITS PANEL BOARD SCHEDULES FOR GENERATOR CAPACITY.
3. SEE SERVICE PANEL DETAILS ON SHEET 15(2D1) FOR EQUIPMENT AND CONDUIT ARRANGEMENT.
4. CONTAINER SYSTEM SHALL BE INSTALLED IN ACCORDANCE WITH NFPA58, 2020 EDITION.
5. REFUELING, EMERGENCY, AND MAINTENANCE ACCESS SHALL BE FROM ACCESS PATH FROM I-95 SOUTHBOUND CD LANES.
6. FOR PROPANE TANK AND PAD DETAILS REFER TO PROPANE TANK DETAIL, SHEET 15(2C3).
7. PROPANE TANK SHALL BE GROUNDED PER MANUFACTURERS RECOMMENDATION.
8. ENCLOSURE FENCE SHALL BE A MINIMUM OF 6' HIGH INDUSTRIAL-TYPE FENCE, CHAIN LINK FENCE, OR EQUIVALENT PROTECTION WITH INCORPORATED PRIVACY SCREENING MATERIAL. VINYL SLATS SHALL BE INSTALLED FOR PRIVACY FENCE SCREENING AT GENERATOR SITES.
9. ALL EGRESS GATES SHALL BE SECURED BY LOCKS WITH KEYS, APPROVED BY THE CONCESSIONAIRE. CONCESSIONAIRE SHALL MAKE KEYS AVAILABLE TO COMPANY PROVIDING CONTRACTED MAINTENANCE AND APPROPRIATE AGENCIES AND DEPARTMENTS PROVIDING FOR PUBLIC SAFETY.
10. VISIBLE HAZARD IDENTIFICATION SIGNS SHALL BE PLACED IN ACCORDANCE WITH NFPA 704 AND VA STATEWIDE FIRE PREVENTION CODE.
11. OPEN AREA WITHIN THE FENCE AND GATE ACCESS AREAS SHALL BE COVERED WITH 4" CONCRETE BASE OVER 6" OF COMPACTED GRAVEL (AGGREGATE BASE MATERIAL, TYPE 1, SIZE 21). A 10' CLEAR ZONE AROUND THE CONTAINER SYSTEM (DISTANCE SHALL BE MEASURED FROM THE EDGE OF THE TANK) SHALL BE COVERED WITH GRAVEL AGGREGATE BASE MATERIAL (TYPE 1, SIZE 21, 6 INCH DEPTH).
12. ELECTRICAL EQUIPMENT AND WIRING INSTALLED SHALL BE IN ACCORDANCE WITH NATIONAL ELECTRICAL CODE.
13. THE 95 EXPRESS LANES ENGINEER SHALL BE CONTACTED PRIOR TO FILLING PROPANE TANK TO ARRANGE SITE INSPECTION. CONTAINER SHALL BE FILLED ONLY AFTER DETERMINATION THAT IT COMPLIES WITH THE DESIGN, FABRICATION, INSPECTION, AND MARKING CODES.
14. CONTAINER SITE SHALL MEET REQUIREMENTS FOR "LOW EMISSION TRANSFER SITE" (NFPA 6.7.3.4 AND 6.30.5)
15. INTERCONNECT GENERATOR, SERVICE PANEL AND FENCE GROUND ROD ELECTRODES WITH #2 BARE TINNED SOLID CONDUCTOR. OTHER METALLIC STRUCTURES WITH PATHS TO GROUND SHALL BE CONNECTED TO THE GROUNDING CONDUCTOR IF THEY ARE LOCATED WITHIN 10' OF THE GROUNDING ELECTRODE SYSTEM.
16. INSTALLATION AND TESTING OF THE GROUND RODS SHALL BE IN ACCORDANCE WITH VDOT 2020 ROAD AND BRIDGE SPECIFICATIONS SECTION 700.
17. CONTRACTOR SHALL VERIFY EXISTING UTILITIES PRIOR TO THE INSTALLATION OF ANY EQUIPMENT. CONTRACTOR SHALL IMMEDIATELY NOTIFY ENGINEER OF ANY DISCOVERED CONFLICTS.
18. MAINTAIN A MINIMUM OF 3' CLEARANCE AROUND ALL SIDES OF EACH EQUIPMENT AND 3.5' IN FRONT OF ALL ELECTRICAL EQUIPMENT.
19. SEE SHEET 15(6) FOR GENERATOR SITE LOCATION.
20. INSTALL CONCRETE FOUNDATIONS FOR THE GENERATOR AND LIQUID PROPANE TANK PRIOR TO INSTALLING THE CONCRETE MOUNTING PAD FOR THE ABOVE GROUND LP PIPE. INSTALL 1/2" EXPANDED RUBBER JOINT SEALER BETWEEN THE MOUNTING PAD AND FOUNDATIONS. CENTER THE ABOVE GROUND LP PIPE ON THE MOUNTING PAD.

CROSS REFERENCES:

2B(9)	GENERATOR SITE ROADWAY AND GRADING PLAN
15(2C3)	PROPANE TANK DETAIL
15(2C4)	GENERATOR CONNECTION DIAGRAM
15(2D1)	POWER EQUIPMENT AND SERVICE RISER DETAILS

AFC PLANS

SCALE 0 10' 20'

PROJECT	SHEET NO.
0095-076-299	15(2C2)

Cell Revised 12/11/12

7/18/2022 4589300101S(02C3).dgn
7:23:50 PM Plotted By: kfisher

LIMITED ACCESS HIGHWAY

By Resolution of the Highway Commission dated October 4, 1956.
By Resolution of the Highway Commission dated January 18, 1973.
By Resolution of the Commonwealth Transportation Board dated April 19, 2022

PROJECT MANAGER: Rimpal Shah, P.E. (703) 259-2362 (NOVA District) _____
SURVEYED BY, DATE: H&B Surveying and Mapping, LLC (804) 330-3781, 03/09/2021
DESIGN BY: Whitman, Requardt, & Associates, LLP (804) 212-8700 _____.
SUBSURFACE UTILITY BY, DATE: Accumark, Inc. (804) 550-7740, 07/07/2021

PROPANE TANK DETAIL

COMMONWEALTH OF VIRGINIA
JEFFREY D. CHENG
Lic. No. 051900
PROFESSIONAL ENGINEER

Jeffrey D Cheng
2022.07.20 15:24:22 -04'00'

Whitman, Requardt & Associates
Baltimore, Maryland
TRAFFIC ENGINEER

REVISED	STATE	STATE ROUTE	STATE PROJECT	SHEET NO.
	VA.	95	0095-076-299,C-501	15(2C3)

DESIGN FEATURES RELATING TO CONSTRUCTION OR TO REGULATION AND CONTROL OF TRAFFIC MAY BE SUBJECT TO CHANGE AS DEEMED NECESSARY BY THE DEPARTMENT

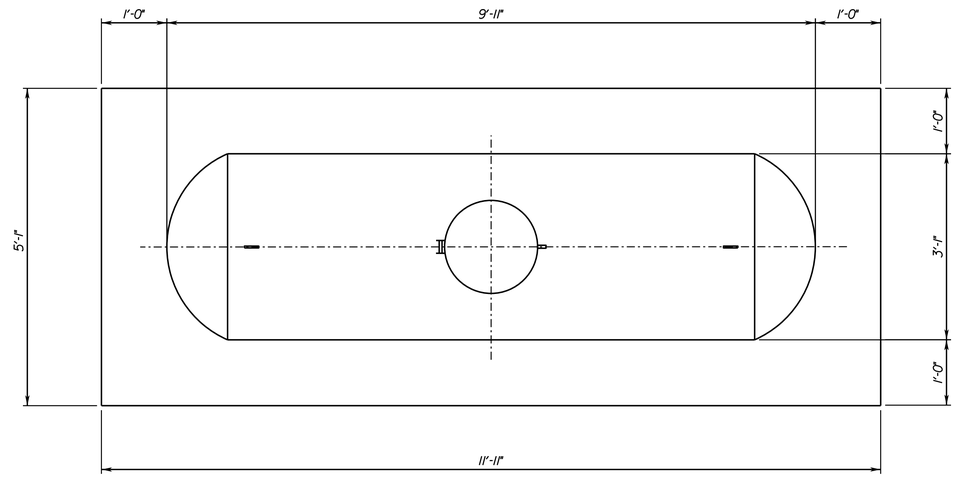

PLAN VIEW
NTS

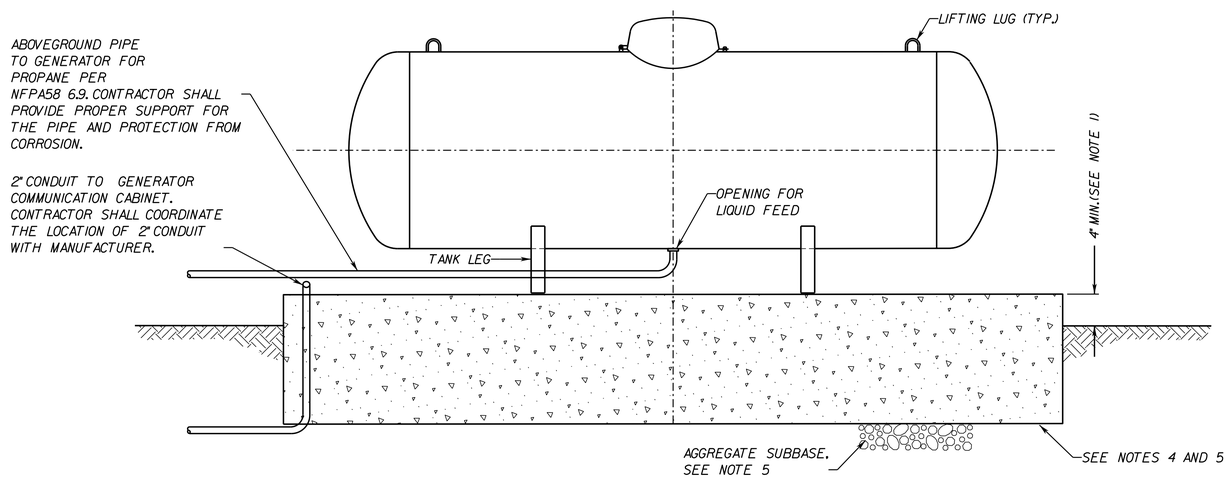

SIDE VIEW
NTS

NOTES:

1. CONSTRUCT TANK SLAB SO TANK BOTTOM IS HIGHER THAN GENERATOR FUEL INTAKE.
2. TANK SHALL BE ASME AMERICAN WELDING AND TANK, LLC OR APPROVED EQUAL CONTAINER. IT SHALL BE IN COMPLIANCE WITH NFPA58 6.6.3, 5.2.4, AND 5.2.5 AND SPECIAL PROVISIONS SECTION 819.
3. CONTAINER SHALL BE MARKED WITH HAZARD IDENTIFICATION SIGNS AS PROVIDED IN THE REGULATIONS, RULES, OR CODE UNDER WHICH THEY ARE FABRICATED AND IN ACCORDANCE WITH NFPA58 5.2.8 AND NFPA704.
4. TANK SHALL BE INSTALLED LEVEL, WITH ALL LEGS IN SAME PLANE TO ASSURE EVEN DISTRIBUTION OF LOADS AND OPTIMIZE ACCURACY OF GAUGE DEVICE.
5. CONCRETE PAD AND SUBBASE SHALL BE DESIGNED BY CONTRACTOR IN ACCORDANCE WITH MANUFACTURER'S RECOMMENDATIONS.
6. TANK, APPURTENANCES AND INSTALLATION SHALL COMPLY WITH NFPA58.
7. TANK SHALL BE PAINTED IN ACCORDANCE WITH NFPA58 6.6.1.4.
8. THREADS OF ALL FITTINGS TO BE COATED WITH COMPOUND SUITABLE FOR USE WITH LP GAS.
9. THE DOME HASP AND HINGE SHALL BE GALVANIZED OR GALVALUME TO ELIMINATE THE RUST AT CONNECTIONS AND SHALL NOT BE WELDED TO THE TANK.
10. DEVICE MEASURING THE AMOUNT OF LIQUID PROPANE AND TRANSMITTER SHALL BE PLACED UNDER THE DOME.
11. PROPANE TANK SHALL HAVE DATA PLATE IN ACCORDANCE WITH NFPA58 5.2.8.3.
12. LIQUID PROPANE VAPORIZER, REGULATOR AND CONTAINMENT SEPARATOR SHALL BE INSTALLED BETWEEN THE GENERATOR AND PROPANE TANK WITH THE CAPACITY SIZED APPROPRIATELY FOR THE RESPECTIVE GENERATOR SIZE. CONTRACTOR TO PROVIDE REQUIRED EQUIPMENT LAYOUT AND DESIGN FOR APPROVAL.

AFC PLANS

N.T.S.	PROJECT 0095-076-299	SHEET NO. 15(2C3)

7/18/2022 4589300101S(02C4).dgn
7:23:51 PM Plotted By: kfisher

LIMITED ACCESS HIGHWAY

By Resolution of the Highway Commission dated October 4, 1956.
By Resolution of the Highway Commission dated January 18, 1973.
By Resolution of the Commonwealth Transportation Board dated April 19, 2022

PROJECT MANAGER: Rimpal Shah, P.E. (703) 259-2362 (NOVA District) _____
SURVEYED BY, DATE: H&B Surveying and Mapping, LLC (804) 330-3781, 03/09/2021
DESIGN BY: Whitman, Requardt, & Associates, LLP (804) 212-8700 _____.
SUBSURFACE UTILITY BY, DATE: Accumark, Inc. (804) 550-7740, 07/07/2021

GENERATOR CONNECTION DIAGRAM

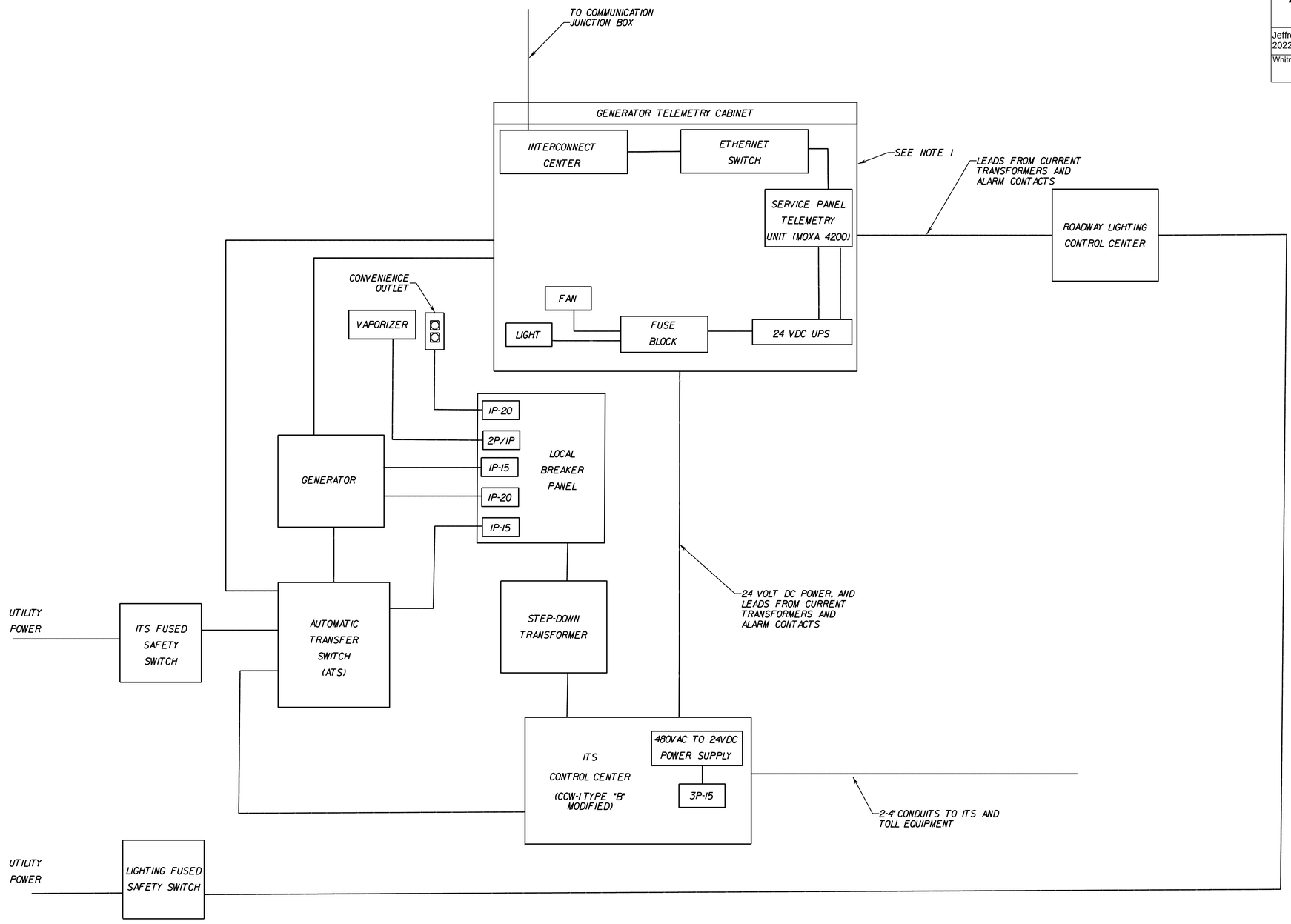

NOTES:

1. SEE SPECIAL PROVISION GENERATOR ASSEMBLIES FOR TELEMETRY STATION SECTION.
2. DEVICES VARY BY SITE. SEE SERVICE PANEL DETAILS FOR DEVICES.
3. BREAKER SIZE AND CAPACITY VARIES DEPENDING ON THE SELECTED VAPORIZER MODEL.

GENERATOR BREAKERS

IP-20	CONVENIENCE OUTLET
IP-15	120V BATTERY CHARGER
IP-20	120V COOLANT HEATER
IP-15	TRANSFER SWITCH CONTROLLER
2P/IP	VAPORIZER (SEE NOTE 3)

COMMONWEALTH OF VIRGINIA
JEFFREY D. CHENG
Lic. No. 051900
PROFESSIONAL ENGINEER

Jeffrey D Cheng
2022.07.20 15:24:46 -04'00'

Whitman, Requardt & Associates
Baltimore, Maryland
TRAFFIC ENGINEER

REVISED	STATE	STATE ROUTE	STATE PROJECT	SHEET NO.
	VA.	95	0095-076-299,C-501	15(2C4)

DESIGN FEATURES RELATING TO CONSTRUCTION OR TO REGULATION AND CONTROL OF TRAFFIC MAY BE SUBJECT TO CHANGE AS DEEMED NECESSARY BY THE DEPARTMENT

AFC PLANS

N.T.S.	PROJECT 0095-076-299	SHEET NO. 15(2C4)

Cell Revised 12/11/12

7/19/2022 4589300101S(02D1).dgn
1:29:31 PM Plotted By: kfisher

LIMITED ACCESS HIGHWAY By Resolution of the Highway Commission dated October 4, 1956.
By Resolution of the Highway Commission dated January 18, 1973.
By Resolution of the Commonwealth Transportation Board dated April 19, 2022

PROJECT MANAGER Rimpal Shah, P.E. (703) 259-2362 (NOVA District) _____
SURVEYED BY, DATE B&B Surveying and Mapping, LLC (804) 330-3781, 03/09/2021
DESIGN BY Whitman, Requardt, & Associates, LLP (804) 212-8700 _____
SUBSURFACE UTILITY BY, DATE Accumark, Inc. (804) 550-7740, 07/07/2021

REVISED	STATE	STATE ROUTE	STATE PROJECT	SHEET NO.
	VA.	95	0095-076-299,C-501	15(2D1)

DESIGN FEATURES RELATING TO CONSTRUCTION OR TO REGULATION AND CONTROL OF TRAFFIC MAY BE SUBJECT TO CHANGE AS DEEMED NECESSARY BY THE DEPARTMENT

COMMONWEALTH OF VIRGINIA
JEFFREY D. CHENG
Lic. No. 051900
PROFESSIONAL ENGINEER

Jeffrey D Cheng
2022.07.20 15:25:06 -04'00'

Whitman, Requardt & Associates
Baltimore, Maryland
TRAFFIC ENGINEER

H118A POWER EQUIPMENT AND SERVICE RISER DETAILS

H118A EQUIPMENT RISER - BACK FACE
NTS

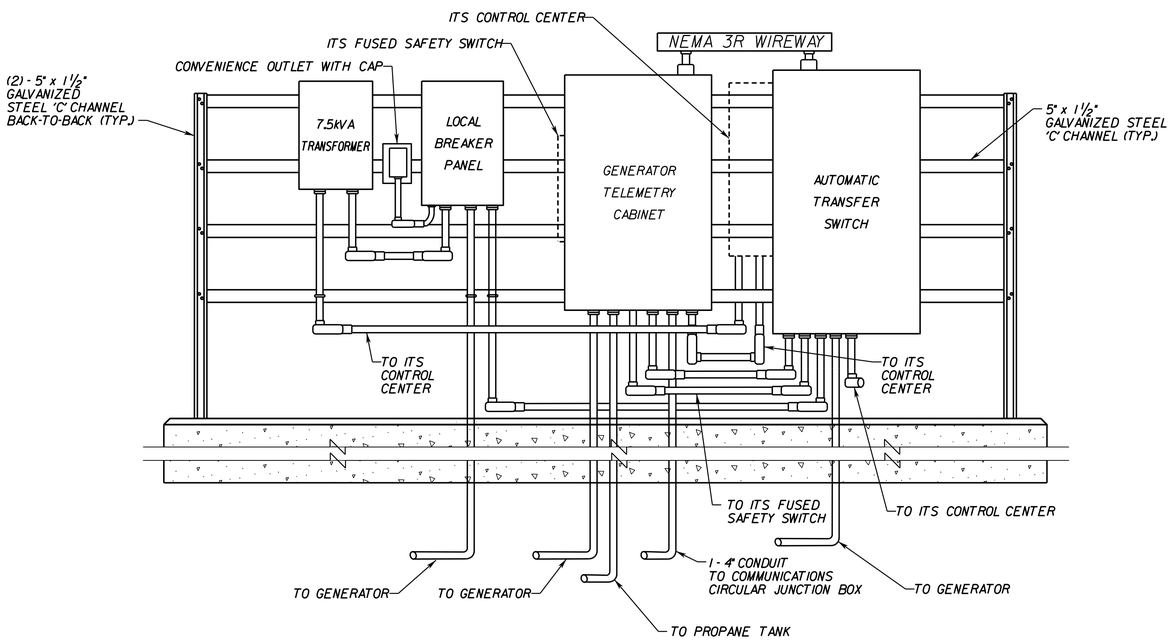

H118A EQUIPMENT RISER - FRONT FACE
NTS

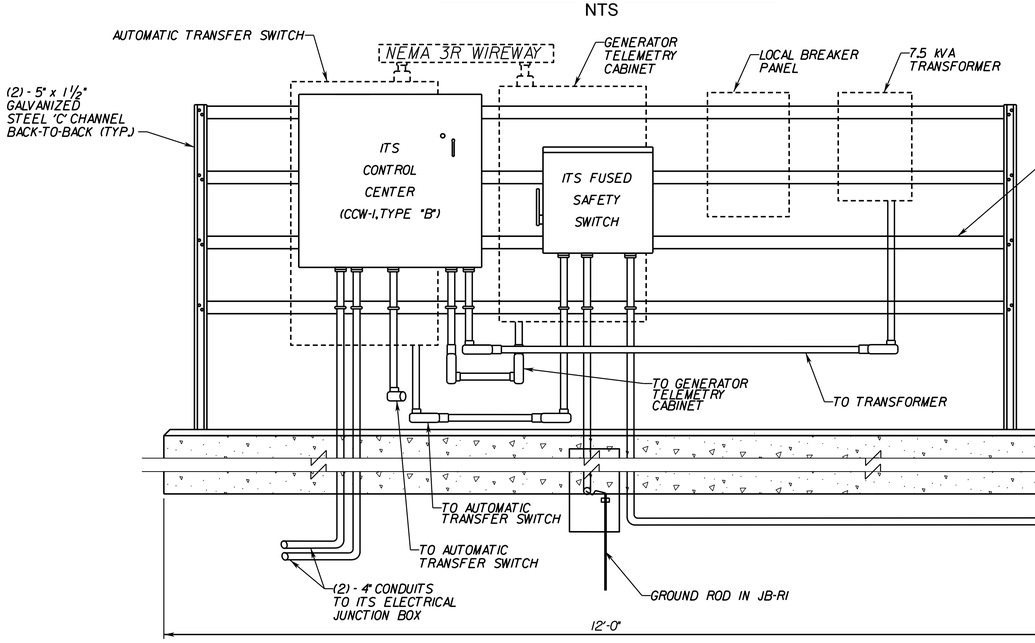

H118A METER RISER - FRONT FACE
NTS

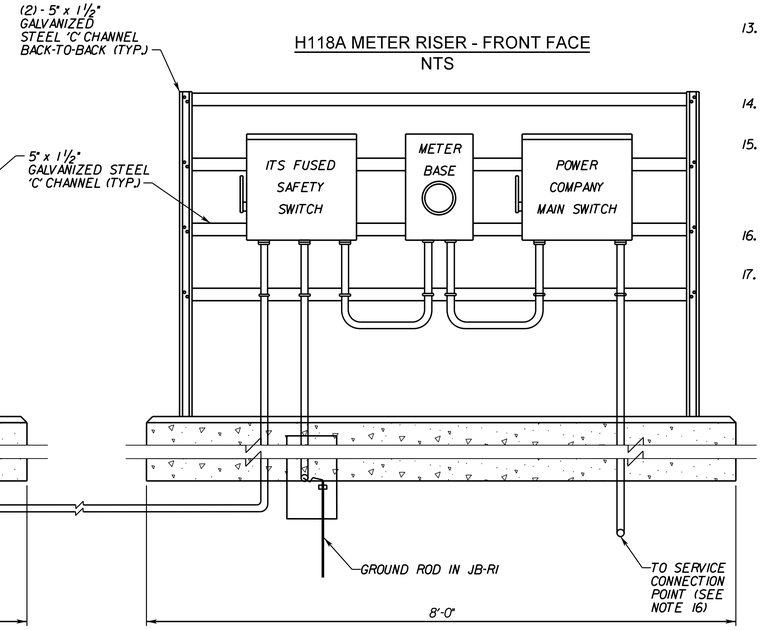

NOTES:

1. ALL EXPOSED CONDUITS SHALL BE GALVANIZED RIGID STEEL.
2. ALL EXPOSED CONCRETE EDGES SHALL BE CHAMFERED ¾ +/- ½ INCHES.
3. GROUNDING BUSHINGS SHALL BE INSTALLED ON EACH END OF METAL CONDUITS.
4. BELL ENDS SHALL BE INSTALLED ON THE ENDS OF PVC CONDUITS.
5. LOCAL POWER COMPANY WILL INSTALL SERVICE CABLE FROM ITS POWER SOURCE TO THE POWER COMPANY MAIN SWITCH AND METER BASE.
6. ALL ENCLOSURES, CABINETS AND WIREWAYS SHALL BE ATTACHED TO THE CHANNELING WITH 3/8 " GALVANIZED BOLTS, LOCK WASHERS AND NUTS. FOUR CROSS CHANNELS SHALL BE UTILIZED.
7. EACH FOUNDATION SHALL BE PERMANENTLY MARKED TO INDICATE ALL SIDES FROM WHICH CONDUITS PASS. THIS MARK SHALL BE MADE WITH A TROWEL WHEN FINISHING THE CONCRETE AND SHALL BE 1/4 " DEEP AND 4" TO 6" LONG.
8. THIS DETAIL IS APPLICABLE FOR 277v/480v ELECTRICAL SERVICE ONLY.
9. THE CONTRACTOR SHALL COORDINATE WITH THE LOCAL POWER COMPANY TO LEAVE A SUFFICIENT AMOUNT OF CONDUCTOR CABLE TO PERMIT THE LOCAL POWER COMPANY TO MAKE ITS CONNECTION TO THE METER.
10. ALL ENCLOSURES SHALL MEET NEMA 3R SPECIFICATIONS AND REQUIREMENTS.
11. INSTALL GROUND RODS AND JUNCTION BOXES IN ACCORDANCE WITH VDOT ROAD AND BRIDGE SPECIFICATIONS 2020 SECTION 700.TESTING OF GROUND RODS SHALL BE IN ACCORDANCE WITH VDOT ROAD AND BRIDGE SPECIFICATIONS SECTION 700.
12. CONTRACTOR SHALL PROVIDE FINAL DESIGN OF THE RISERS BASED ON FIELD CONDITIONS AND ULTIMATE EQUIPMENT DIMENSIONS TO THE ENGINEER FOR APPROVAL.
13. CONTRACTOR SHALL BE RESPONSIBLE FOR VERIFYING DIMENSIONS OF ALL EQUIPMENT TO BE PROVIDED SO THAT FINAL DIMENSIONS OF STRUCTURES THAT EQUIPMENT IS MOUNTED ON CAN BE CONFIRMED AND TO CONFIRM THERE ARE NO CONFLICTS.
14. SEE SHEET 15(2D3) FOR POWER EQUIPMENT AND SERVICE RISER FOUNDATION DETAILS.
15. THE CONTRACTOR SHALL COORDINATE WITH NOVEC (JOSEPH BERRY, ELECTRIC UTILITY DESIGNER, 709-754-5756, JBERRY@NOVEC.COM) FOR THE INSTALLATION OF THE ELECTRIC SERVICE CONNECTION EQUIPMENT. ALL WORK SHALL BE PERFORMED IN ACCORDANCE WITH NOVEC'S ELECTRICIAN'S GUIDE.
16. CONDUIT SWEEPS FOR CONDUIT DESIGNATED FOR USE BY NOVEC SHALL HAVE A 3 FOOT MINIMUM RADIUS SWEEP.
17. THE CONTRACTOR SHALL VERIFY EQUIPMENT LUG SIZES AND SHALL INSTALL A SPLICE JUNCTION BOX OR WIRING TROUGH IN ORDER TO REDUCE CONDUCTOR SIZES FOR TERMINATION ON DISCONNECT SWITCHES OR CIRCUIT BREAKERS.

AFC PLANS

N.T.S.	PROJECT 0095-076-299	SHEET NO. 15(2D1)

Cell Revised 12/11/12

7/19/2022 4589300101S(02D2).dgn
1:29:33 PM Plotted By: kfisher

LIMITED ACCESS HIGHWAY

By Resolution of the Highway Commission dated October 4, 1956.
By Resolution of the Highway Commission dated January 18, 1973.
By Resolution of the Commonwealth Transportation Board dated April 19, 2022

PROJECT MANAGER Rimpal Shah, P.E. (703) 259-2362 (NOVA District) _____
SURVEYED BY, DATE B&B Surveying and Mapping, LLC (804) 330-3781, 03/09/2021
DESIGN BY Whitman, Requardt, & Associates, LLP (804) 212-8700 _____
SUBSURFACE UTILITY BY, DATE Accutark, Inc. (804) 550-7740, 07/07/2021

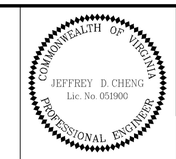

Jeffrey D Cheng
2022.07.20 15:25:28 -04'00'

Whitman, Requardt & Associates
Baltimore, Maryland
TRAFFIC ENGINEER

REVISED	STATE	STATE ROUTE	STATE PROJECT	SHEET NO.
	VA.	95	0095-076-299,C-501	15(2D2)

DESIGN FEATURES RELATING TO CONSTRUCTION OR TO REGULATION AND CONTROL OF TRAFFIC MAY BE SUBJECT TO CHANGE AS DEEMED NECESSARY BY THE DEPARTMENT

H117A POWER EQUIPMENT AND SERVICE RISER DETAILS

H117A EQUIPMENT RISER - BACK FACE
NTS

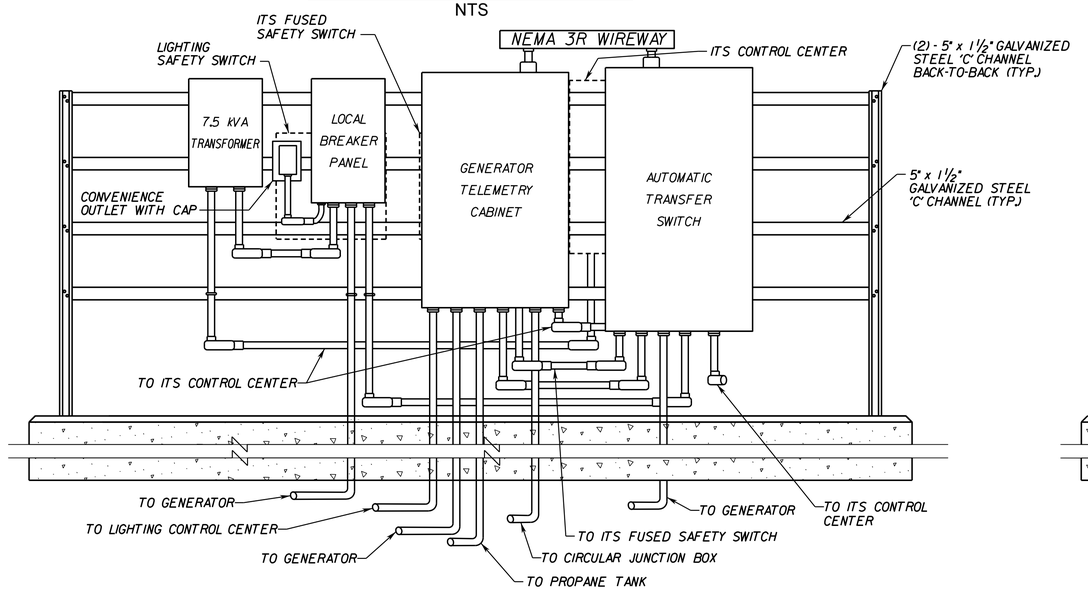

H117A METER RISER - BACK FACE
NTS

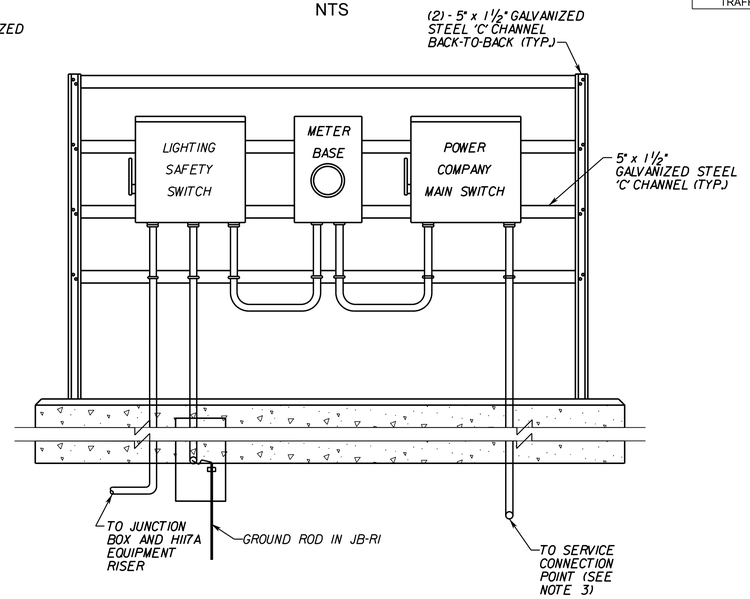

H117A EQUIPMENT RISER - FRONT FACE
NTS

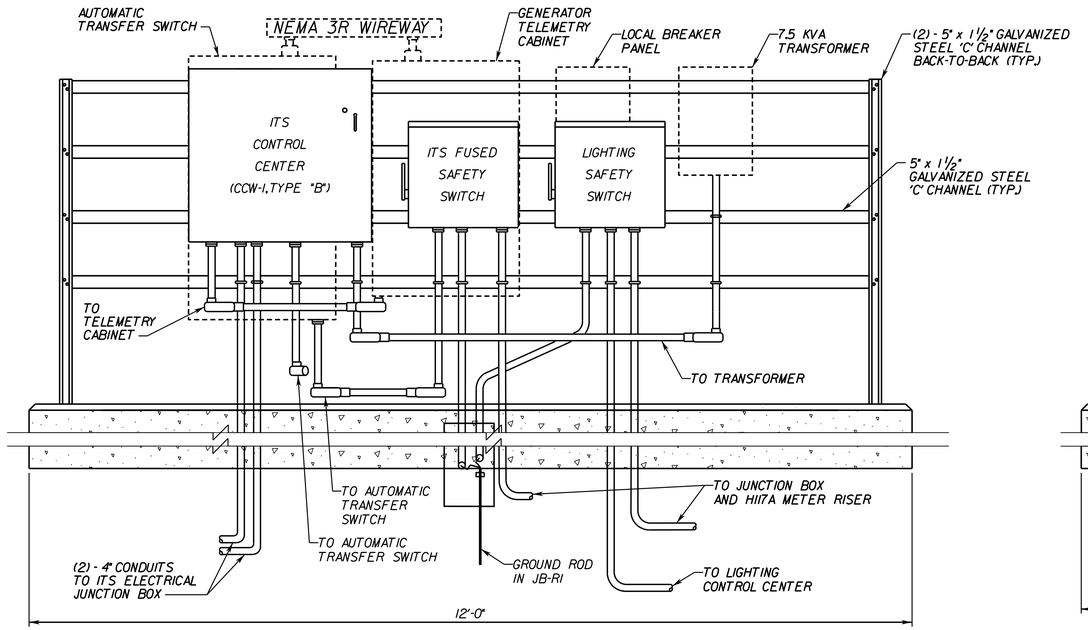

H117A METER RISER - FRONT FACE
NTS

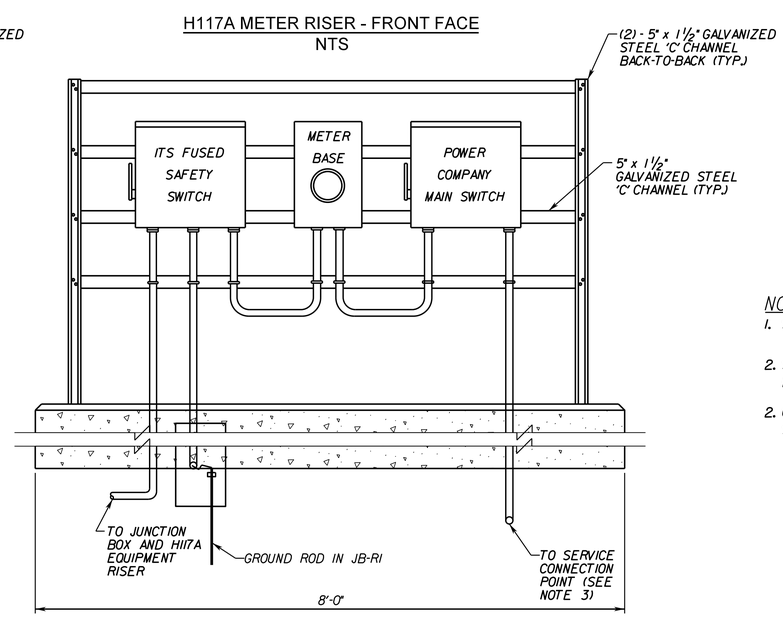

NOTES:

1. SEE SHEET 15(2D1) FOR NOTES APPLICABLE TO THESE DETAILS.
2. SEE SHEET 15(2D3) FOR LIGHTING CONTROL CENTER AND POWER EQUIPMENT AND SERVICE RISER FOUNDATION DETAILS.
2. CONDUIT SWEEPS FOR CONDUIT DESIGNATED FOR USE BY NOVEC SHALL HAVE A 3 FOOT MINIMUM RADIUS SWEEP.

AFC PLANS

N.T.S.	PROJECT 0095-076-299	SHEET NO. 15(2D2)

Cell Revised 12/11/12

7/18/2022 4589300101S(02D3).dgn
7:23:57 PM Plotted By: kfisher

LIMITED ACCESS HIGHWAY

By Resolution of the Highway Commission dated October 4, 1956.
By Resolution of the Highway Commission dated January 18, 1973.
By Resolution of the Commonwealth Transportation Board dated April 19, 2022

PROJECT MANAGER Rimpal Shah, P.E. (703) 259-2362 (NOVA District) _____
SURVEYED BY, DATE H&B Surveying and Mapping, LLC (804) 330-3781, 03/09/2021
DESIGN BY Whitman, Requardt, & Associates, LLP (804) 212-8700 _____.
SUBSURFACE UTILITY BY, DATE Accumark, Inc. (804) 550-7740, 07/07/2021

ROADWAY LIGHTING CONTROL CENTER AND POWER EQUIPMENT AND SERVICE RISER FOUNDATION DETAILS

COMMONWEALTH OF VIRGINIA
JEFFREY D. CHENG
Lic. No. 051900
PROFESSIONAL ENGINEER

Jeffrey D Cheng
2022.07.20 15:25:48 -04'00'

Whitman, Requardt & Associates
Baltimore, Maryland
TRAFFIC ENGINEER

REVISED	STATE	STATE ROUTE	STATE PROJECT	SHEET NO.
	VA.	95	0095-076-299,C-501	15(2D3)

DESIGN FEATURES RELATING TO CONSTRUCTION OR TO REGULATION AND CONTROL OF TRAFFIC MAY BE SUBJECT TO CHANGE AS DEEMED NECESSARY BY THE DEPARTMENT

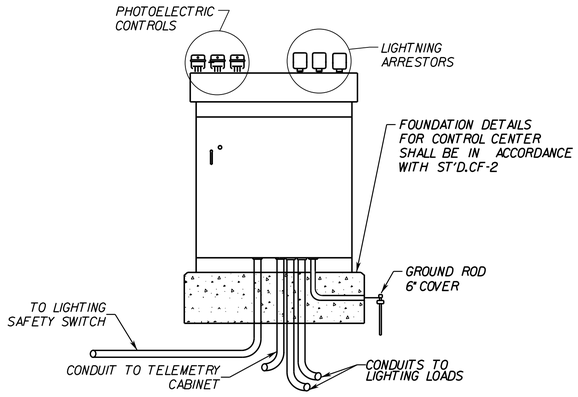

ROADWAY LIGHTING CONTROL CENTER
CCW-1 TYPE "H" MODIFIED

NTS

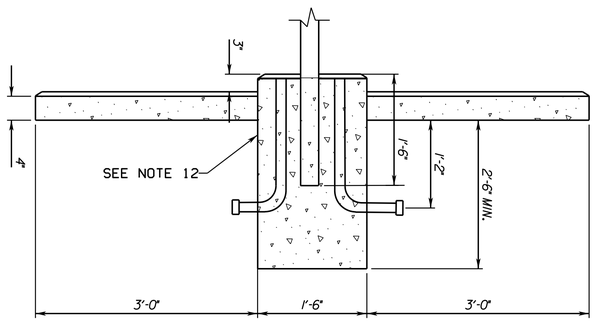

EQUIPMENT AND METER RISER FOUNDATION DETAIL - SIDE VIEW
NTS

NOTES:

1. ALL EXPOSED CONDUITS SHALL BE GALVANIZED RIGID STEEL.
2. ALL EXPOSED CONCRETE EDGES SHALL BE CHAMFERED ¾ +/- ½ INCHES.
3. GROUNDING BUSHINGS SHALL BE INSTALLED ON EACH END OF METAL CONDUITS.
4. BELL ENDS SHALL BE INSTALLED ON THE ENDS OF PVC CONDUITS.
5. LOCAL POWER COMPANY WILL INSTALL SERVICE CABLE FROM ITS POWER SOURCE TO THE CURRENT TRANSFORMER CABINET AND METER BASE.
6. EACH FOUNDATION SHALL BE PERMANENTLY MARKED TO INDICATE ALL SIDES FROM WHICH CONDUITS PASS. THIS MARK SHALL BE MADE WITH A TROWEL WHEN FINISHING THE CONCRETE AND SHALL BE 1/4" DEEP AND 4" TO 6" LONG.
7. THIS DETAIL IS APPLICABLE FOR 277/480V ELECTRICAL SERVICE ONLY.
8. THE CONTRACTOR SHALL COORDINATE WITH THE LOCAL POWER COMPANY TO LEAVE A SUFFICIENT AMOUNT OF CONDUCTOR CABLE COILED INSIDE THE CURRENT TRANSFORMER CABINET TO PERMIT THE LOCAL POWER COMPANY TO MAKE ITS CONNECTION.
9. ALL ENCLOSURES SHALL MEET NEMA 3R SPECIFICATIONS AND REQUIREMENTS.
10. LIGHTNING ARRESTORS SHALL BE 277 VOLTS. DELTA LIGHTNING ARRESTOR MODEL LA 601 OR APPROVED EQUAL.
11. INSTALL GROUND RODS AND JUNCTION BOXES IN ACCORDANCE WITH 2020 VDOT ROAD AND BRIDGE SPECIFICATIONS SECTION 700. TESTING OF GROUND RODS SHALL BE IN ACCORDANCE WITH VDOT ROAD AND BRIDGE SPECIFICATIONS SECTION 700.
12. CONTRACTOR SHALL PROVIDE FINAL DESIGN OF THE RISERS BASED ON FIELD CONDITIONS TO THE ENGINEER FOR APPROVAL.

AFC PLANS

N.T.S.	PROJECT 0095-076-299	SHEET NO. 15(2D3)

LIMITED ACCESS HIGHWAY

By Resolution of the Highway Commission dated October 4, 1956.
By Resolution of the Highway Commission dated January 18, 1973.
By Resolution of the Commonwealth Transportation Board dated April 19, 2022

PROJECT MANAGER Rimpal Shah, P.E. (703) 259-2362 (NOVA District)
SURVEYED BY, DATE H&B Surveying and Mapping, LLC (804) 330-3781, 03/09/2021
DESIGN BY Whitman, Requardt, & Associates, LLP (804) 212-8700
SUBSURFACE UTILITY BY, DATE Accumark, Inc. (804) 550-7740, 07/07/2021

CONTROL CENTER AND BREAKER PANEL WIRING DETAILS

COMMONWEALTH OF VIRGINIA
JEFFREY D. CHENG
Lic. No. 051900
PROFESSIONAL ENGINEER

Jeffrey D Cheng
2022.07.20 15:26:13 -04'00'

Whitman, Requardt & Associates
Baltimore, Maryland
TRAFFIC ENGINEER

REVISED	STATE	STATE ROUTE	STATE PROJECT	SHEET NO.
	VA.	95	0095-076-299,C-501	15(2D4)

DESIGN FEATURES RELATING TO CONSTRUCTION OR TO REGULATION AND CONTROL OF TRAFFIC MAY BE SUBJECT TO CHANGE AS DEEMED NECESSARY BY THE DEPARTMENT

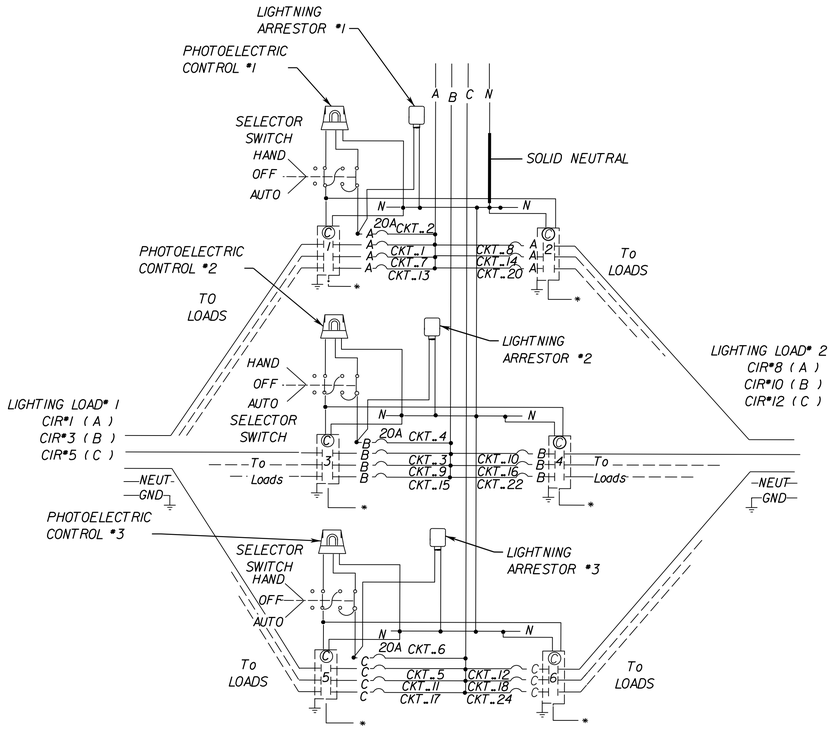

CCW-1 TYPE "H" MODIFIED (SEE NOTES 1 & 2)
NTS

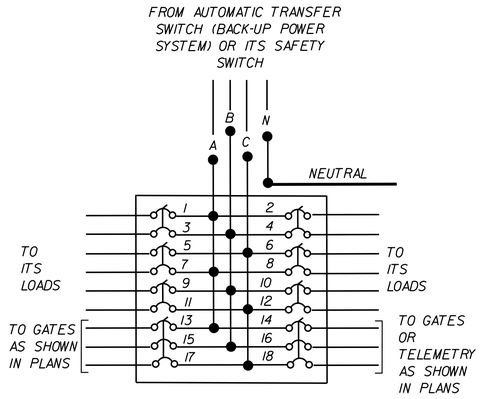

CCW-1 TYPE "B" MODIFIED
NTS

AMP RATING	CONDUIT SIZE	CONDUCTOR SIZE
30 AMP	1"	#8
60 AMP	1 1/4"	#6
100 AMP	1 1/2"	#2
200 AMP	2"	#000
300 AMP	2 1/2"	250 MCM
400 AMP	3 1/2 "	500 MCM

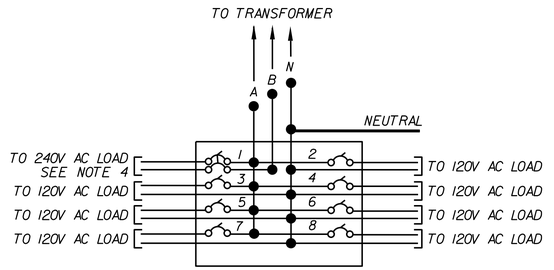

GENERATOR LOCAL BREAKER PANEL WIRING DETAIL
NTS

NOTES:

1. CONTACTORS SHALL HAVE 3 POLES FOR THREE PHASE SERVICES. NUMBER OF CONTACTORS SHALL BE AS REQUIRED TO HANDLE THE NUMBER OF CIRCUITS ACTUALLY BEING UTILIZED.
2. IN THE CCW-1, TYPE H MODIFIED, ALL CIRCUIT BREAKERS SHALL BE SINGLE POLE. VOLTAGE AND CURRENT RATING OF CONTACTORS AND BREAKERS SHALL BE AS INDICATED ON THE PLANS.
3. NUMBER OF CIRCUITS SHOWN ARE TYPICAL. EXACT NUMBER REQUIRED SHALL BE AS INDICATED IN THE PLANS.
4. VAPORIZER CONNECTION IS ONLY APPLICABLE TO SERVICE PANEL SITES WITH GENERATORS. VAPORZIER WIRING MAY VARY DEPENDING ON THE SELECTED VAPORIZER MODEL.
5. IF NEEDED, CONTRACTOR SHALL INSTALL A SPLICE JUNCTION BOX OR WIRING TROUGH IN ORDER TO REDUCE CONDUCTOR SIZES FOR TERMINATION ON DISCONNECT SWITCHES OR CIRCUIT BREAKERS.
6. ALL SERVICE PANELS SHALL BE CAPABLE OF MONITORING AND REPORTING ALARMS FOR THE MAIN POWER AND EACH BRANCH CIRCUIT. THE CURRENT FLOW, AND ANY TRIPPED BREAKERS. PROVIDE TELEMETRY EQUIPMENT AT EACH EXPRESS LANES CONTROL CENTER TO REPORT THE CURRENT AND BREAKER STATUS OF EACH CIRCUIT AND MAIN POWER. THE TELEMETRY EQUIPMENT SHALL BE CAPABLE OF PROVIDING STATUS INFORMATION FOR TROUBLESHOOTING POWER RELATED OUTAGES AND HELP TO DETERMINE IF THE TROUBLE IS A LOSS OF POWER FROM THE UTILITY PROVIDER, A TRIPPED CIRCUIT BREAKER, OR SEVERED DISTRIBUTION LINE BETWEEN THE CONTROL CENTER AND THE FIELD DEVICE.

AFC PLANS

N.T.S.	PROJECT 0095-076-299	SHEET NO. 15(2D4)

7/19/2022 4589300101S(02E1).dgn
1:29:35 PM Plotted By: kfisher

LIMITED ACCESS HIGHWAY By Resolution of the Highway Commission dated October 4, 1956.
By Resolution of the Highway Commission dated January 18, 1973.
By Resolution of the Commonwealth Transportation Board dated April 19, 2022

PROJECT MANAGER Rimpal Shah, P.E. (703) 259-2362 (NOVA District)
SURVEYED BY, DATE H&B Surveying and Mapping, LLC (804) 330-3781, 03/09/2021
DESIGN BY Whitman, Requardt, & Associates, LLP (804) 212-8700
SUBSURFACE UTILITY BY, DATE Accumark, Inc. (804) 550-7740, 07/07/2021

COMMONWEALTH OF VIRGINIA
JEFFREY D. CHENG
Lic. No. 051900
PROFESSIONAL ENGINEER

Jeffrey D Cheng
2022.07.20 15:26:34 -04'00'

Whitman, Requardt & Associates
Baltimore, Maryland
TRAFFIC ENGINEER

REVISED	STATE	STATE ROUTE	STATE PROJECT	SHEET NO.
	VA.	95	0095-076-299,C-501	15(2E1)

DESIGN FEATURES RELATING TO CONSTRUCTION OR TO REGULATION AND CONTROL OF TRAFFIC MAY BE SUBJECT TO CHANGE AS DEEMED NECESSARY BY THE DEPARTMENT

POWER DISTRIBUTION DIAGRAM - HII7

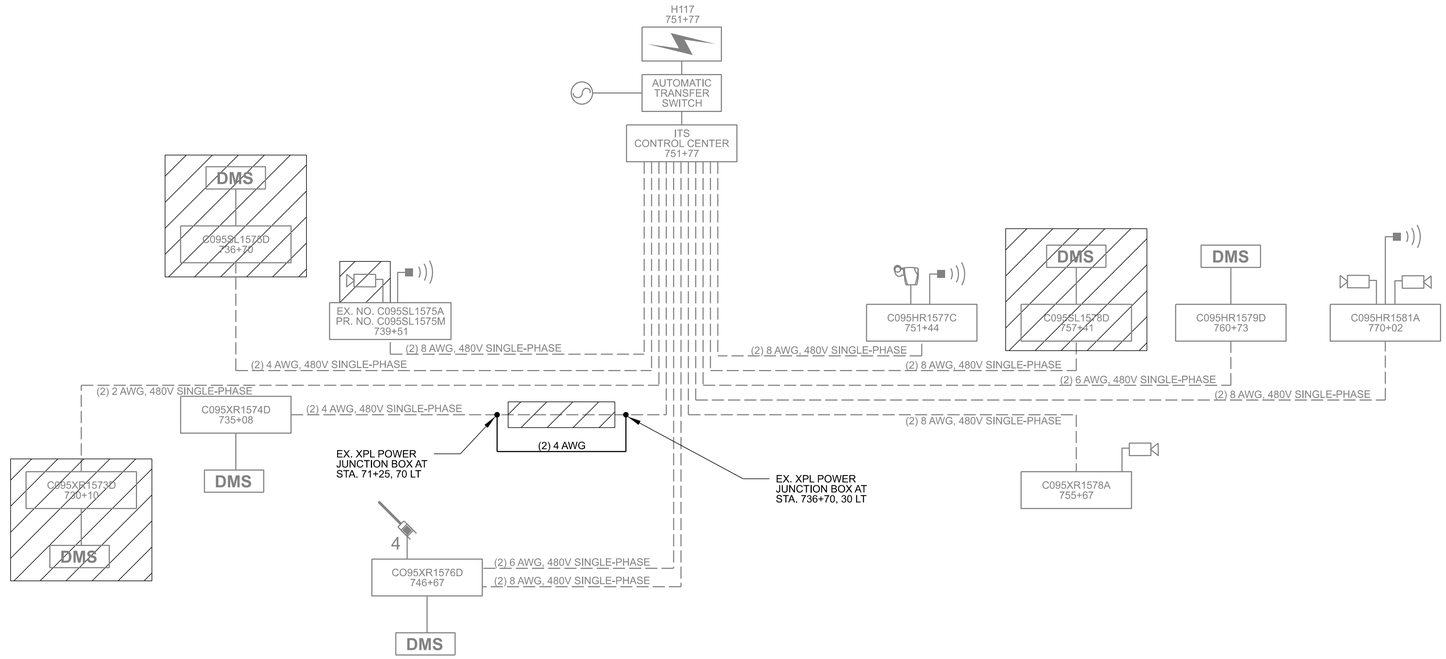

LEGEND

EXISTING	PROPOSED	DESCRIPTION	EXISTING	PROPOSED	DESCRIPTION
		UTILITY ELECTRIC SERVICE			GENERATOR
		POWER CABLE	E-ZPass	N/A	TOLL TAG READER & ENFORCEMENT
		GATE	XXX+XX	XXX+XX	TTMS CABINET / TTMS CONTROL CENTER
		MICROWAVE VEHICLE DETECTOR	N/A		EXISTING EQUIPMENT TO BE REMOVED
		PTZ CCTV CAMERA	N/A	FIXED CCTV	FIXED CCTV CAMERA
		AID CAMERA			
DMS	DMS	DYNAMIC MESSAGE SIGN			

NOTES:
1. CIRCUIT INFORMATION SHOWN FOR EXISTING CIRCUITS IS BASED OF OF THE 95 EXPRESS LANES SEGMENT 2N AS-BUILT PLANS.

AFC PLANS

	PROJECT	SHEET NO.
	0095-076-299	15(2E1)

Cell Revised 12/11/12

7/18/2022 4589300101S(02E2).dgn
7:24:03 PM Plotted By: kfisher

LIMITED ACCESS HIGHWAY By Resolution of the Highway Commission dated October 4, 1956.
By Resolution of the Highway Commission dated January 18, 1973.
By Resolution of the Commonwealth Transportation Board dated April 19, 2022

PROJECT MANAGER Rimpal Shah, P.E. (703) 259-2362 (NOVA District)
SURVEYED BY, DATE H&B Surveying and Mapping, LLC (804) 330-3781, 03/09/2021
DESIGN BY Whitman, Requardt, & Associates, LLP (804) 212-8700
SUBSURFACE UTILITY BY, DATE Accumark, Inc. (804) 550-7740, 07/07/2021

COMMONWEALTH OF VIRGINIA
JEFFREY D. CHENG
Lic. No. 051900
PROFESSIONAL ENGINEER

Jeffrey D Cheng
2022.07.20 15:27:00 -04'00'

Whitman, Requardt & Associates
Baltimore, Maryland
TRAFFIC ENGINEER

REVISED	STATE	STATE ROUTE	STATE PROJECT	SHEET NO.
	VA.	95	0095-076-299,C-501	15(2E2)

DESIGN FEATURES RELATING TO CONSTRUCTION OR TO REGULATION AND CONTROL OF TRAFFIC MAY BE SUBJECT TO CHANGE AS DEEMED NECESSARY BY THE DEPARTMENT

POWER DISTRIBUTION DIAGRAM - H117A

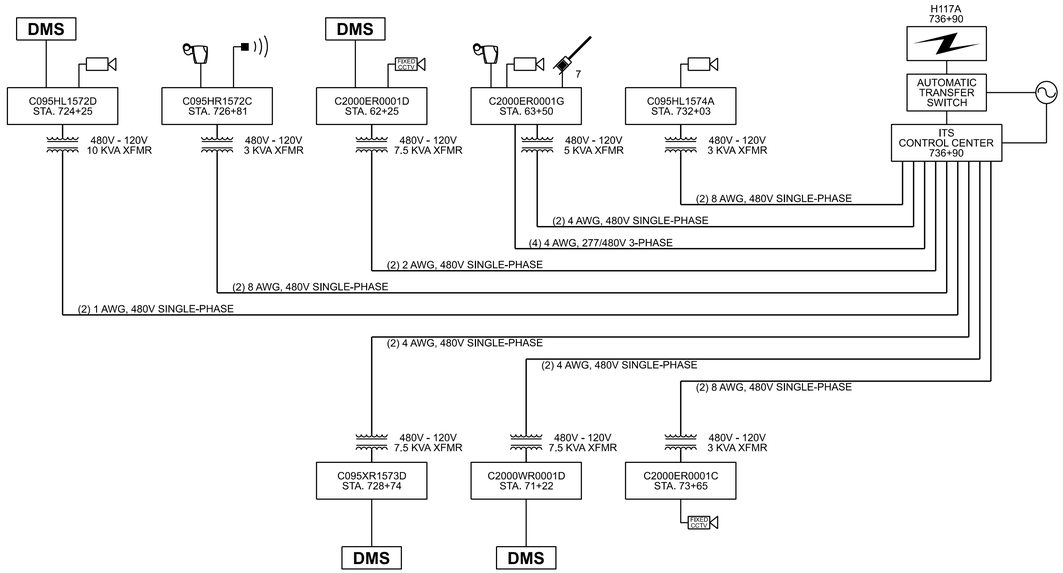

LEGEND

EXISTING	PROPOSED	DESCRIPTION	EXISTING	PROPOSED	DESCRIPTION
		UTILITY ELECTRIC SERVICE			GENERATOR
		POWER CABLE	E-ZPass	N/A	TOLL TAG READER & ENFORCEMENT
		GATE	XXX+XX	XXX+XX	TTMS CABINET / TTMS CONTROL CENTER
		MICROWAVE VEHICLE DETECTOR	N/A		EXISTING EQUIPMENT TO BE REMOVED
		PTZ CCTV CAMERA	N/A	FIXED CCTV	FIXED CCTV CAMERA
		AID CAMERA			
DMS	DMS	DYNAMIC MESSAGE SIGN			

AFC PLANS

	PROJECT	SHEET NO.
	0095-076-299	15(2E2)

Cell Revised 12/IV/12

LIMITED ACCESS HIGHWAY By Resolution of the Highway Commission dated October 4, 1956.
By Resolution of the Highway Commission dated January 18, 1973.
By Resolution of the Commonwealth Transportation Board dated April 19, 2022

PROJECT MANAGER Rimpal Shah, P.E. (703) 259-2362 (NOVA District)
SURVEYED BY, DATE H&B Surveying and Mapping, LLC (804) 330-3781, 03/09/2021
DESIGN BY Whitman, Requardt, & Associates, LLP (804) 212-8700
SUBSURFACE UTILITY BY, DATE Accumark, Inc. (804) 550-7740, 07/07/2021

COMMONWEALTH OF VIRGINIA
JEFFREY D. CHENG
Lic. No. 051900
PROFESSIONAL ENGINEER

Jeffrey D Cheng
2022.07.20 15:27:21 -04'00'

Whitman, Requardt & Associates
Baltimore, Maryland
TRAFFIC ENGINEER

REVISED	STATE	STATE ROUTE	STATE PROJECT	SHEET NO.
	VA.	95	0095-076-299,C-501	15(2E3)

DESIGN FEATURES RELATING TO CONSTRUCTION OR TO REGULATION AND CONTROL OF TRAFFIC MAY BE SUBJECT TO CHANGE AS DEEMED NECESSARY BY THE DEPARTMENT

POWER DISTRIBUTION DIAGRAM - HII8

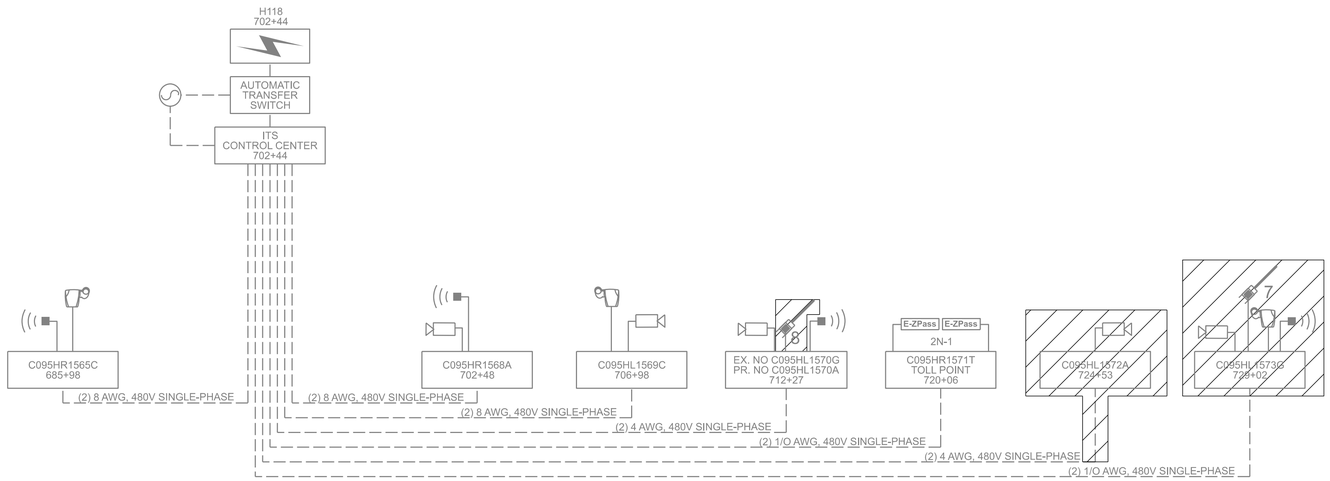

LEGEND

EXISTING	PROPOSED	DESCRIPTION	EXISTING	PROPOSED	DESCRIPTION
		UTILITY ELECTRIC SERVICE			GENERATOR
		POWER CABLE	E-ZPass	N/A	TOLL TAG READER & ENFORCEMENT
		GATE	XXX+XX	XXX+XX	TTMS CABINET / TTMS CONTROL CENTER
		MICROWAVE VEHICLE DETECTOR	N/A		EXISTING EQUIPMENT TO BE REMOVED
		PTZ CCTV CAMERA	N/A	FIXED CCTV	FIXED CCTV CAMERA
		AID CAMERA			
DMS	DMS	DYNAMIC MESSAGE SIGN			

NOTES:
1. CIRCUIT INFORMATION SHOWN FOR EXISTING CIRCUITS IS BASED OF OF THE 95 EXPRESS LANES SEGMENT 2N AS-BUILT PLANS.

AFC PLANS

PROJECT	SHEET NO.
0095-076-299	15(2E3)

7/18/2022 4589300101S(02E4).dgn
7:24:08 PM Plotted By: kfisher

LIMITED ACCESS HIGHWAY

By Resolution of the Highway Commission dated October 4, 1956.
By Resolution of the Highway Commission dated January 18, 1973.
By Resolution of the Commonwealth Transportation Board dated April 19, 2022

PROJECT MANAGER Rimpal Shah, P.E. (703) 259-2362 (NOVA District) _____
SURVEYED BY, DATE H&B Surveying and Mapping, LLC (804) 330-3781, 03/09/2021
DESIGN BY Whitman, Requardt, & Associates, LLP (804) 212-8700 _____.
SUBSURFACE UTILITY BY, DATE Accumark, Inc. (804) 550-7740, 07/07/2021

COMMONWEALTH OF VIRGINIA
JEFFREY D. CHENG
Lic. No. 051900
PROFESSIONAL ENGINEER

Jeffrey D Cheng
2022.07.20 15:27:39 -04'00'

Whitman, Requardt & Associates
Baltimore, Maryland
TRAFFIC ENGINEER

REVISED	STATE	STATE ROUTE	STATE PROJECT	SHEET NO.
	VA.	95	0095-076-299,C-501	15(2E4)

DESIGN FEATURES RELATING TO CONSTRUCTION OR TO REGULATION AND CONTROL OF TRAFFIC MAY BE SUBJECT TO CHANGE AS DEEMED NECESSARY BY THE DEPARTMENT

POWER DISTRIBUTION DIAGRAM - HII8A

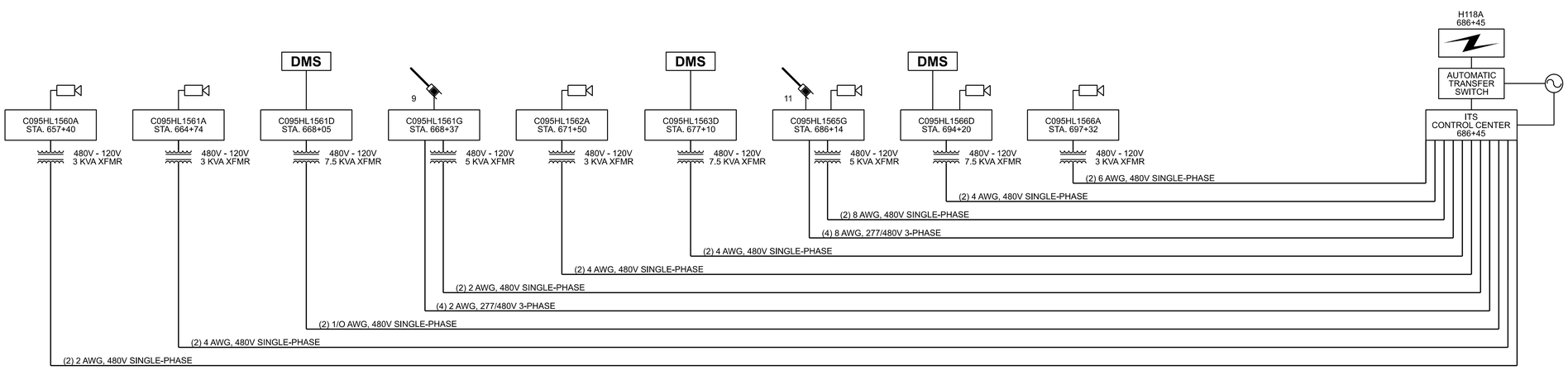

LEGEND

EXISTING	PROPOSED	DESCRIPTION	EXISTING	PROPOSED	DESCRIPTION
		UTILITY ELECTRIC SERVICE			GENERATOR
		POWER CABLE	E-ZPass	N/A	TOLL TAG READER & ENFORCEMENT
		GATE	XXX+XX	XXX+XX	TTMS CABINET / TTMS CONTROL CENTER
		MICROWAVE VEHICLE DETECTOR	N/A		EXISTING EQUIPMENT TO BE REMOVED
		PTZ CCTV CAMERA	N/A	FIXED CCTV	FIXED CCTV CAMERA
		AID CAMERA			
DMS	DMS	DYNAMIC MESSAGE SIGN			

AFC PLANS

	PROJECT	SHEET NO.
	0095-076-299	15(2E4)

LIMITED ACCESS HIGHWAY

By Resolution of the Highway Commission dated October 4, 1956.
By Resolution of the Highway Commission dated January 18, 1973.
By Resolution of the Commonwealth Transportation Board dated April 19, 2022

PROJECT MANAGER Rimpal Shah, P.E. (703) 259-2362 (NOVA District)
SURVEYED BY, DATE H&B Surveying and Mapping, LLC (804) 330-3781, 03/09/2021
DESIGN BY Whitman, Requardt, & Associates, LLP (804) 212-8700
SUBSURFACE UTILITY BY, DATE Accumark, Inc. (804) 550-7740, 07/07/2021

COMMONWEALTH OF VIRGINIA
JEFFREY D. CHENG
Lic. No. 051900
PROFESSIONAL ENGINEER

Jeffrey D Cheng
2022.07.20 15:28:05 -04'00'

Whitman, Requardt & Associates
Baltimore, Maryland
TRAFFIC ENGINEER

REVISED	STATE	STATE ROUTE	STATE PROJECT	SHEET NO.
	VA.	95	0095-076-299,C-501	15(2E5)

DESIGN FEATURES RELATING TO CONSTRUCTION OR TO REGULATION AND CONTROL OF TRAFFIC MAY BE SUBJECT TO CHANGE AS DEEMED NECESSARY BY THE DEPARTMENT

POWER DISTRIBUTION DIAGRAM - HII9

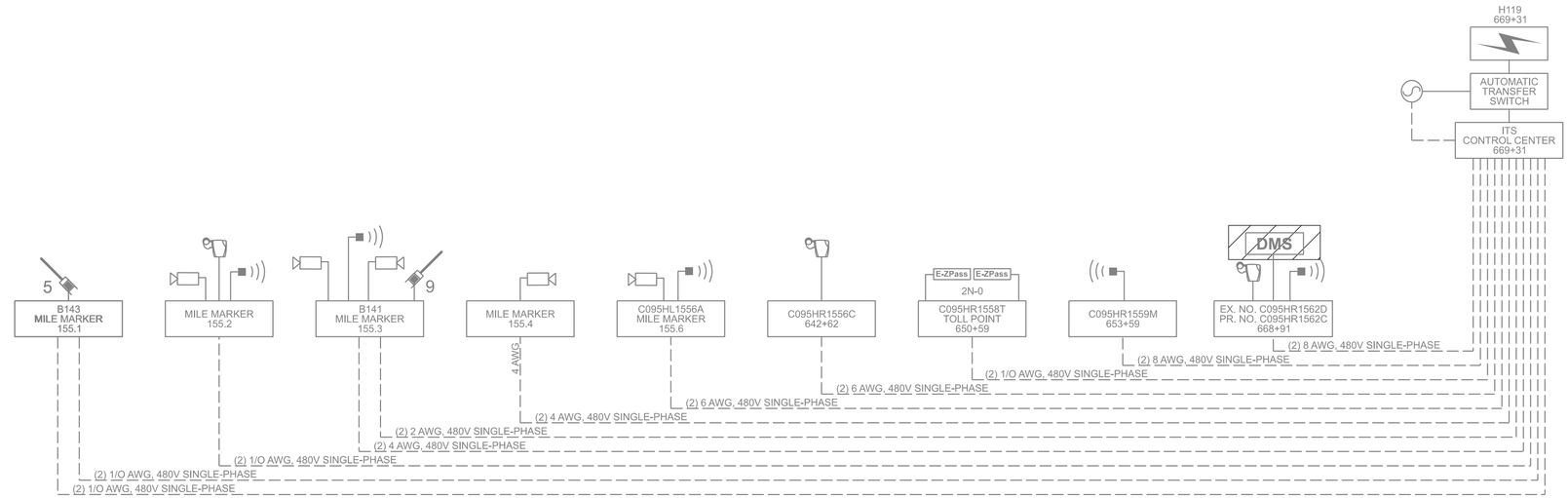

LEGEND

EXISTING	PROPOSED	DESCRIPTION	EXISTING	PROPOSED	DESCRIPTION
		UTILITY ELECTRIC SERVICE			GENERATOR
		POWER CABLE	E-ZPass	N/A	TOLL TAG READER & ENFORCEMENT
		GATE	XXX+XX	XXX+XX	TTMS CABINET / TTMS CONTROL CENTER
		MICROWAVE VEHICLE DETECTOR	N/A		EXISTING EQUIPMENT TO BE REMOVED
		PTZ CCTV CAMERA	N/A	FIXED CCTV	FIXED CCTV CAMERA
		AID CAMERA			
DMS	DMS	DYNAMIC MESSAGE SIGN			

NOTES:
1. CIRCUIT INFORMATION SHOWN FOR EXISTING CIRCUITS IS BASED OF OF THE 95 EXPRESS LANES SEGMENT 2N AS-BUILT PLANS.

AFC PLANS

	PROJECT	SHEET NO.
	0095-076-299	15(2E5)

LIMITED ACCESS HIGHWAY

By Resolution of the Highway Commission dated October 4, 1956.
By Resolution of the Highway Commission dated January 18, 1973.
By Resolution of the Commonwealth Transportation Board dated April 19, 2022

PROJECT MANAGER Rimpal Shah, P.E. (703) 259-2362 (NOVA District) _____
SURVEYED BY, DATE H&B Surveying and Mapping, LLC (804) 330-3781, 03/09/2021
DESIGN BY Whitman, Requardt, & Associates, LLP (804) 212-8700 _____.
SUBSURFACE UTILITY BY, DATE Accumark, Inc. (804) 550-7740, 07/07/2021

COMMONWEALTH OF VIRGINIA
JEFFREY D. CHENG
Lic. No. 051900
PROFESSIONAL ENGINEER

Jeffrey D Cheng
2022.07.20 15:28:23 -04'00'

Whitman, Requardt & Associates
Baltimore, Maryland
TRAFFIC ENGINEER

REVISED	STATE	STATE ROUTE	STATE PROJECT	SHEET NO.
	VA.	95	0095-076-299,C-501	15(2E6)

DESIGN FEATURES RELATING TO CONSTRUCTION OR TO REGULATION AND CONTROL OF TRAFFIC MAY BE SUBJECT TO CHANGE AS DEEMED NECESSARY BY THE DEPARTMENT

PANEL SCHEDULE - H117

STANDARD	TYPE	VOLTAGE	SAFETY SWITCH		BACK UP POWER SYSTEM	
			VOLTAGE	AMPERAGE	VOLTAGE	KILOWATTS
SE - 9	C	277/480	600	200	277/480	35

BRANCH CIRCUITS

CABINET	DEVICES	TRANSFORMER SIZE (KVA) / CONNECTED LOAD	BREAKER SIZE	CIRCUIT NO.		CIRCUIT NO.		BREAKER SIZE	TRANSFORMER SIZE (KVA) / CONNECTED LOAD	DEVICES	CABINET
C095XRI573D 730-10	1 - DMS	7.5	2P-20	1	1	2	2	2P-15	5	1 - DMS	C095XRI574D 735-08
				1	3	4	2				
C095SLI575D 736-70	1 - DMS	7.5	2P-20	3	5	6	4	2P-15	3	1 - AID 1 - MVD	EX. NO. C095SLI575A PR. NO. C095SLI575M 739-51
				3	7	8	4				
C095XRI576D 746-67	1 - GATE CONTROL 1 - DMS	10	2P-30	5	9	10	6	2P-15	5	4 - GATES	C095XRI576D 746-67
				5	11	12	6				
751-77	GENERATOR BREAKER PANEL	3	2P-15	7	13	14	8	2P-15	3	1-CCTV 1-MVD	C095HRI577C 751-44
				7	15	16	8				
C095XRI578A 755-67	1 - AID	3	2P-15	9	17	18	10	2P-20	7.5	1 - DMS	C095SLI578D 757-41
				9	19	20	10				
C095HRI579D 760-73	1 - DMS	7.5	2P-20	11	21	22	12	2P-15	3	2-AID 1-MVD	C095HRI581A 770-02
				11	23	24	12				
			SPACE	N/A	25	26	14	3P-15	1	GENERATOR COMMUNICATION CABINET	751-77
			SPACE	N/A	27	28	14				
			SPACE	N/A	29	30	14				

AFC PLANS

LEGEND

EQUIPMENT TO BE REMOVED FROM EXISTING CIRCUITS. EXISTING CIRCUITS SHALL BECOME SPARES OR RE-PURPOSED AS SHOWN.

NOTES:
1. PANEL SCHEDULE INFORMATION SHOWN FOR EXISTING CIRCUITS IS BASED OF OF THE 95 EXPRESS LANES SEGMENT 2N AS-BUILT PLANS.

PROJECT	SHEET NO.
0095-076-299	15(2E6)

Cell Revised 12/11/12

LIMITED ACCESS HIGHWAY

By Resolution of the Highway Commission dated October 4, 1956.
By Resolution of the Highway Commission dated January 18, 1973.
By Resolution of the Commonwealth Transportation Board dated April 19, 2022

PROJECT MANAGER Rimpal Shah, P.E. (703) 259-2362 (NOVA District) _____
SURVEYED BY, DATE H&B Surveying and Mapping, LLC (804) 330-3781, 03/09/2021
DESIGN BY Whitman, Requardt, & Associates, LLP (804) 212-8700 _____.
SUBSURFACE UTILITY BY, DATE Accumark, Inc. (804) 550-7740, 07/07/2021

COMMONWEALTH OF VIRGINIA
JEFFREY D. CHENG
Lic. No. 051900
PROFESSIONAL ENGINEER

Jeffrey D Cheng
2022.07.20 15:28:49 -04'00'

Whitman, Requardt & Associates
Baltimore, Maryland
TRAFFIC ENGINEER

REVISED	STATE	STATE ROUTE	STATE PROJECT	SHEET NO.
	VA.	95	0095-076-299,C-501	15(2E7)

DESIGN FEATURES RELATING TO CONSTRUCTION OR TO REGULATION AND CONTROL OF TRAFFIC MAY BE SUBJECT TO CHANGE AS DEEMED NECESSARY BY THE DEPARTMENT

PANEL SCHEDULE - HII7A

STANDARD	TYPE	VOLTAGE	SAFETY SWITCH		BACK UP POWER SYSTEM	
			VOLTAGE	AMPERAGE	VOLTAGE	KILOWATTS
SE -9	C	277/480	600	200	277/480	50

BRANCH CIRCUITS

CABINET	DEVICES	TRANSFORMER SIZE (KVA) / CONNECTED LOAD	BREAKER SIZE	CIRCUIT NO.		CIRCUIT NO.		BREAKER SIZE	TRANSFORMER SIZE (KVA) / CONNECTED LOAD	DEVICES	CABINET
C2000ER0001G 63.50	1 - PTZ CCTV 1 - AID 1 - GATE CONTROL	5	2P-30	1	1	2	2	2P-15	3	1 - FIXED CCTV	C20000ER0001C 73.65
				1	3	4	2				
C095NRI573D 728.74	1 - DMS	7.5	2P-20	3	5	6	4	2P-20	7.5	1 - DMS 1 - FIXED CCTV	C2000ER0001D 62.25
				3	7	8	4				
C095HLI572D 724.25	1 - DMS 1 - AID	10	2P-30	5	9	10	4	3P-15	13.125	7 - GATES	C2000XR0001G 63.50
				5	11	12	6				
C095HLI574A 732.03	1 - AID	3	2P-15	7	13	14	6				
				7	15	16	8	3P-15	1	GENERATOR TELEMETRY CABINET	736.90
C095HRI572C 726.81	1 - CCTV 1 - MVD	3	2P-15	9	17	18	8				
				9	19	20	8				
737.74	GENERATOR BREAKER PANEL	7.5	2P-15	N/A	21	22	N/A	SPACE			
				N/A	23	24	N/A	SPACE			
C2000WR0001D 71.22	1 - DMS	7.5	2P-20	N/A	25	26	N/A	SPACE			
				N/A	27	28	N/A	SPACE			
			SPACE	N/A	29	30	N/A	SPACE			
			SPACE	N/A	31	32	N/A	SPACE			
			SPACE	N/A	33	34	N/A	SPACE			
			SPACE	N/A	35	36	N/A	SPACE			

AFC PLANS

PROJECT	SHEET NO.
0095-076-299	15(2E7)

LIMITED ACCESS HIGHWAY

By Resolution of the Highway Commission dated October 4, 1956.
By Resolution of the Highway Commission dated January 18, 1973.
By Resolution of the Commonwealth Transportation Board dated April 19, 2022

PROJECT MANAGER: Rimpal Shah, P.E. (703) 259-2362 (NOVA District)
SURVEYED BY, DATE: H&B Surveying and Mapping, LLC (804) 330-3781, 03/09/2021
DESIGN BY: Whitman, Requardt, & Associates, LLP (804) 212-8700
SUBSURFACE UTILITY BY, DATE: Accumark, Inc. (804) 550-7740, 07/07/2021

COMMONWEALTH OF VIRGINIA
JEFFREY D. CHENG
Lic. No. 051900
PROFESSIONAL ENGINEER

Jeffrey D Cheng
2022.07.20 15:29:10 -04'00'

Whitman, Requardt & Associates
Baltimore, Maryland
TRAFFIC ENGINEER

REVISED	STATE	STATE ROUTE	STATE PROJECT	SHEET NO.
	VA.	95	0095-076-299,C-501	15(2E8)

DESIGN FEATURES RELATING TO CONSTRUCTION OR TO REGULATION AND CONTROL OF TRAFFIC MAY BE SUBJECT TO CHANGE AS DEEMED NECESSARY BY THE DEPARTMENT

PANEL SCHEDULE - H118

STANDARD	TYPE	VOLTAGE	SAFETY SWITCH		BACK UP POWER SYSTEM	
			VOLTAGE	AMPERAGE	VOLTAGE	KILOWATTS
SE - 9	C	277/480	600	200	277/480	50

BRANCH CIRCUITS

CABINET	DEVICES	TRANSFORMER SIZE (KVA) / CONNECTED LOAD	BREAKER SIZE	CIRCUIT NO.		CIRCUIT NO.		BREAKER SIZE	TRANSFORMER SIZE (KVA) / CONNECTED LOAD	DEVICES	CABINET
C095HRI565C 685-98	1 - CCTV 1 - MVD	3	2P-15	1	1	2	2	2P-15	3	GENERATOR BREAKER PANEL	702-44
				1	3	4	2				
C095HRI568A 702-48	1 - AID 1 - MVD	3	2P-15	3	5	6	4	2P-30	10	8 - GATES 1 - MVD 1 - AID	EX. NO. C095HLI570G PR. NO. C095HLI570A 712-27
				3	7	8	4				
C095HLI569C 706-98	1 - CCTV 1 - AID	3	2P-15	5	9	10	6	2P-15	3	1 - AID	C095HLI572A 724-53
				5	11	12	6				
720-06	TOLL POINT 2N - 1	15	2P-40	7	13	14	8	3P-15	1	GENERATOR TELEMETRY CABINET	DALE BLVD. 702-44
				7	15	16	8				
C095HLI573G 729-02	7 - GATES 1 - CCTV 1 - AID 1 - MVD	10	2P-30	9	17	18	8				
				9	19	20	N/A	SPACE			
			SPACE	N/A	21	22	N/A	SPACE			
			SPACE	N/A	23	24	N/A	SPACE			
			SPACE	N/A	25	26	N/A	SPACE			
			SPACE	N/A	27	28	N/A	SPACE			
			SPACE	N/A	29	30	N/A	SPACE			

AFC PLANS

LEGEND

EQUIPMENT TO BE REMOVED FROM EXISTING CIRCUITS. EXISTING CIRCUITS SHALL BECOME SPARES OR RE-PURPOSED AS SHOWN.

NOTES:
1. PANEL SCHEDULE INFORMATION SHOWN FOR EXISTING CIRCUITS IS BASED OF OF THE 95 EXPRESS LANES SEGMENT 2N AS-BUILT PLANS.

PROJECT	SHEET NO.
0095-076-299	15(2E8)

LIMITED ACCESS HIGHWAY

By Resolution of the Highway Commission dated October 4, 1956.
By Resolution of the Highway Commission dated January 18, 1973.
By Resolution of the Commonwealth Transportation Board dated April 19, 2022

PROJECT MANAGER: Rimpal Shah, P.E. (703) 259-2362 (NOVA District) _____
SURVEYED BY, DATE: H&B Surveying and Mapping, LLC (804) 330-3781, 03/09/2021
DESIGN BY: Whitman, Requardt, & Associates, LLP (804) 212-8700 _____.
SUBSURFACE UTILITY BY, DATE: Accutark, Inc. (804) 550-7740, 07/07/2021

COMMONWEALTH OF VIRGINIA
JEFFREY D. CHENG
Lic. No. 051900
PROFESSIONAL ENGINEER

Jeffrey D Cheng
2022.07.20 15:29:30 -04'00'

Whitman, Requardt & Associates
Baltimore, Maryland
TRAFFIC ENGINEER

REVISED	STATE	STATE ROUTE	STATE PROJECT	SHEET NO.
	VA.	95	0095-076-299,C-501	15(2E9)

DESIGN FEATURES RELATING TO CONSTRUCTION OR TO REGULATION AND CONTROL OF TRAFFIC MAY BE SUBJECT TO CHANGE AS DEEMED NECESSARY BY THE DEPARTMENT

PANEL SCHEDULE - H118A

STANDARD	TYPE	VOLTAGE	SAFETY SWITCH		BACK UP POWER SYSTEM	
			VOLTAGE	AMPERAGE	VOLTAGE	KILOWATTS
SE-9	C	277/480	600	200	277/480	60

BRANCH CIRCUITS

CABINET	DEVICES	TRANSFORMER SIZE (KVA) / CONNECTED LOAD	BREAKER SIZE	CIRCUIT NO.		CIRCUIT NO.		BREAKER SIZE	TRANSFORMER SIZE (KVA) / CONNECTED LOAD	DEVICES	CABINET
C095HLI560A 657-40	1 - AID	3	2P-15	1	1	2	2	2P-20	7.5	1-DMS	C095HLI561D 668-05
				1	3	4	2				
C095HLI561G 668-27	9 - GATES	16.875	3P-20	3	5	6	4	2P-20	7.5	1 - DMS 1 - AID	C095HLI566D 694-20
				3	7	8	4				
				3	8	10	6	2P-15	5	1 - GATE CONTROL	C095HLI561G 668-37
C095HLI562A 671-50	1 - AID	3	2P-15	5	11	12	6				
				5	13	14	8	2P-15	3	1-AID	C095HLI561A 664-74
C095HLI563D 677-10	1 - DMS	7.5	2P-20	7	15	16	8				
				7	17	18	10	2P-15	5	1 - GATE CONTROL 1-AID	C095HLI565G 686-14
C095HLI565G 686-14	11 - GATES	20.625	3P-20	9	19	20	10				
				9	21	22	12	2P-15	3	1 - AID	C095HLI566A 697-32
				9	23	24	12				
686-33	GENERATOR BREAKER PANEL	7.5	2P-15	11	25	26	14	3P-15	1	GENERATOR TELEMETRY CABINET	686-45
				11	27	28	14				
			SPACE	N/A	29	30	14				
			SPACE	N/A	31	32	N/A	SPACE			
			SPACE	N/A	33	34	N/A	SPACE			
			SPACE	N/A	35	36	N/A	SPACE			

AFC PLANS

PROJECT	SHEET NO.
0095-076-299	15(2E9)

Cell Revised 12/11/12

LIMITED ACCESS HIGHWAY

By Resolution of the Highway Commission dated October 4, 1956.
By Resolution of the Highway Commission dated January 18, 1973.
By Resolution of the Commonwealth Transportation Board dated April 19, 2022

PROJECT MANAGER: Rimpal Shah, P.E. (703) 259-2362 (NOVA District) _____
SURVEYED BY, DATE: H&B Surveying and Mapping, LLC (804) 330-3781, 03/09/2021
DESIGN BY: Whitman, Requardt, & Associates, LLP (804) 212-8700 _____.
SUBSURFACE UTILITY BY, DATE: Accumark, Inc. (804) 550-7740, 07/07/2021

COMMONWEALTH OF VIRGINIA
JEFFREY D. CHENG
Lic. No. 051900
PROFESSIONAL ENGINEER

Jeffrey D Cheng
2022.07.20 15:29:52 -04'00'

Whitman, Requardt & Associates
Baltimore, Maryland
TRAFFIC ENGINEER

REVISED	STATE	STATE ROUTE	STATE PROJECT	SHEET NO.
	VA.	95	0095-076-299,C-501	15(2E10)

DESIGN FEATURES RELATING TO CONSTRUCTION OR TO REGULATION AND CONTROL OF TRAFFIC MAY BE SUBJECT TO CHANGE AS DEEMED NECESSARY BY THE DEPARTMENT

PANEL SCHEDULE - H119

STANDARD	TYPE	VOLTAGE	SAFETY SWITCH		BACK UP POWER SYSTEM	
			VOLTAGE	AMPERAGE	VOLTAGE	KILOWATTS
SE-9	C	277/480	600	200	277/480	50

BRANCH CIRCUITS

CABINET	DEVICES	TRANSFORMER SIZE (KVA) / CONNECTED LOAD	BREAKER SIZE	CIRCUIT NO.		CIRCUIT NO.		BREAKER SIZE	TRANSFORMER SIZE (KVA) / CONNECTED LOAD	DEVICES	CABINET
B143 MILE MARKER 155.1	1 - GATE CONTROL	5	2P-15	1	1	2	2	2P-15	5	5 - GATES	MILE MARKER 155.1
				1	3	4	2				
MILE MARKER 155.2	1 - CCTV 1 - AID 1 - MVD	3	2P-15	3	5	6	4	2P-15	5	1 - GATE CONTROL 2 - AID 1 - MVD	B141 MILE MARKER 155.3
				3	7	8	4				
MILE MARKER 155.3	9 - GATES	7.5	2P-20	5	9	10	6	2P-15	3	1 - AID	MILE MARKER 155.4
				5	11	12	6				
C095HLI556A MILE MARKER 155.6	1 - AID 1 - MVD	3	2P-15	7	13	14	8	2P-15	3	1 - CCTV	C095HRI556C 642-62
				7	15	16	8				
C095HRI559M 653-59	1 - MVD	3	2P-15	9	17	18	10	2P-20	7.5	1 - DMS 1 - CCTV 1 - MVD	EX.NO.C095HRI562D PR.NO.C095HRI562C 668-91
				9	19	20	10				
669-31	GENERATOR BREAKER PANEL	3	2P-15	11	21	22	12	2P-40	15	TOLL POINT 2N - 0	650-59
				11	23	24	12				
			SPACE	N/A	25	26	14	3P-15	1	GENERATOR COMMUNICATION CABINET	669-31
			SPACE	N/A	27	28	14				
			SPACE	N/A	29	30	14				
			SPACE	N/A	31	32	N/A	SPACE			
			SPACE	N/A	33	34	N/A	SPACE			
			SPACE	N/A	35	36	N/A	SPACE			

AFC PLANS

LEGEND

EQUIPMENT TO BE REMOVED FROM EXISTING CIRCUITS. EXISTING CIRCUITS SHALL BECOME SPARES OR RE-PURPOSED AS SHOWN.

NOTES:
1. PANEL SCHEDULE INFORMATION SHOWN FOR EXISTING CIRCUITS IS BASED OF OF THE 95 EXPRESS LANES SEGMENT 2N AS-BUILT PLANS.

	PROJECT	SHEET NO.
	0095-076-299	15(2E10)

LIMITED ACCESS HIGHWAY

By Resolution of the Highway Commission dated October 4, 1956.
By Resolution of the Highway Commission dated January 18, 1973.
By Resolution of the Commonwealth Transportation Board dated April 19, 2022

PROJECT MANAGER: Rimpal Shah, P.E. (703) 259-2362 (NOVA District)
SURVEYED BY, DATE: H&B Surveying and Mapping, LLC (804) 330-3781, 03/09/2021
DESIGN BY: Whitman, Requardt, & Associates, LLP (804) 212-8700
SUBSURFACE UTILITY BY, DATE: Accumark, Inc. (804) 550-7740, 07/07/2021

COMMONWEALTH OF VIRGINIA
JEFFREY D. CHENG
Lic. No. 051900
PROFESSIONAL ENGINEER

Jeffrey D Cheng
2022.07.20 15:30:11 -04'00'

Whitman, Requardt & Associates
Baltimore, Maryland
TRAFFIC ENGINEER

REVISED	STATE	STATE ROUTE	STATE PROJECT	SHEET NO.
	VA.	95	0095-076-299,C-501	15(2E11)

DESIGN FEATURES RELATING TO CONSTRUCTION OR TO REGULATION AND CONTROL OF TRAFFIC MAY BE SUBJECT TO CHANGE AS DEEMED NECESSARY BY THE DEPARTMENT

POWER DISTRIBUTION DIAGRAM - VDOT SP-22

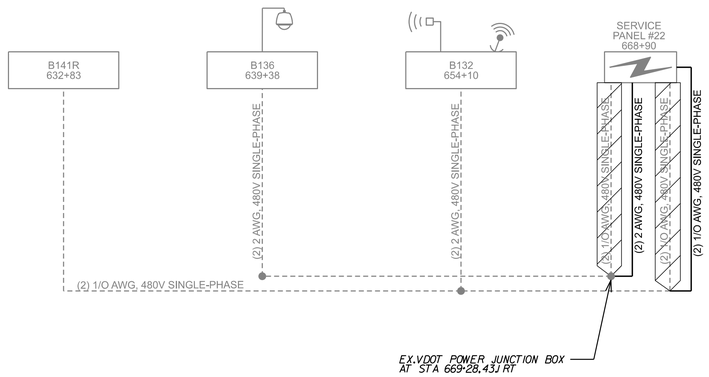

POWER DISTRIBUTION DIAGRAM - VDOT SP-21

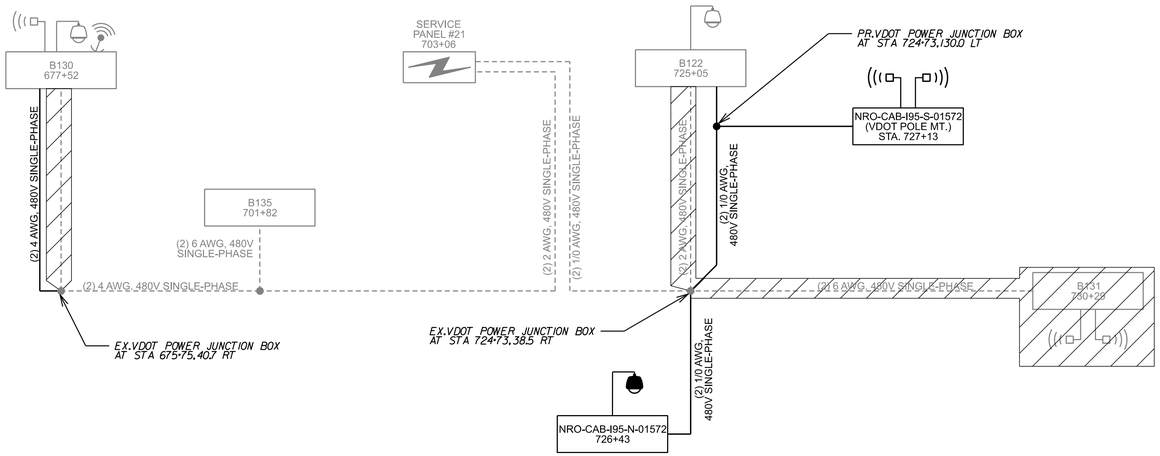

LEGEND

EXISTING	PROPOSED	DESCRIPTION	EXISTING	PROPOSED	DESCRIPTION
		SERVICE PANEL		R/A	RADIO EQUIPMENT
		VDOT POWER CABLE			ITS EQUIPMENT
		VDOT MICROWAVE VEHICLE DETECTOR	R/A		EXISTING EQUIPMENT TO BE REMOVED
		VDOT CCTV CAMERA			

NOTES:
1. CONNECTIONS AND CABLE SIZES AS SHOWN ARE FROM THE AS BUILTS.

AFC PLANS

PROJECT	SHEET NO.
0095-076-299	15(2E11)

7/18/2022 4589300101S(02F1).dgn
7:24:22 PM Plotted By: kfisher

LIMITED ACCESS HIGHWAY

By Resolution of the Highway Commission dated October 4, 1956.
By Resolution of the Highway Commission dated January 18, 1973.
By Resolution of the Commonwealth Transportation Board dated April 19, 2022

PROJECT MANAGER: Rimpal Shah, P.E. (703) 259-2362 (NOVA District)
SURVEYED BY, DATE: H&B Surveying and Mapping, LLC (804) 330-3781, 03/09/2021
DESIGN BY: Whitman, Requardt, & Associates, LLP (804) 212-8700
SUBSURFACE UTILITY BY, DATE: Accumark, Inc. (804) 550-7740, 07/07/2021

COMMONWEALTH OF VIRGINIA
JEFFREY D. CHENG
Lic. No. 051900
PROFESSIONAL ENGINEER

Jeffrey D Cheng
2022.07.20 15:52:43 -04'00'

Whitman, Requardt & Associates
Baltimore, Maryland
TRAFFIC ENGINEER

REVISED	STATE	STATE ROUTE	STATE PROJECT	SHEET NO.
	VA.	95	0095-076-299,C-501	15(2F1)

DESIGN FEATURES RELATING TO CONSTRUCTION OR TO REGULATION AND CONTROL OF TRAFFIC MAY BE SUBJECT TO CHANGE AS DEEMED NECESSARY BY THE DEPARTMENT

COMMUNICATIONS ARCHITECTURE - XPL

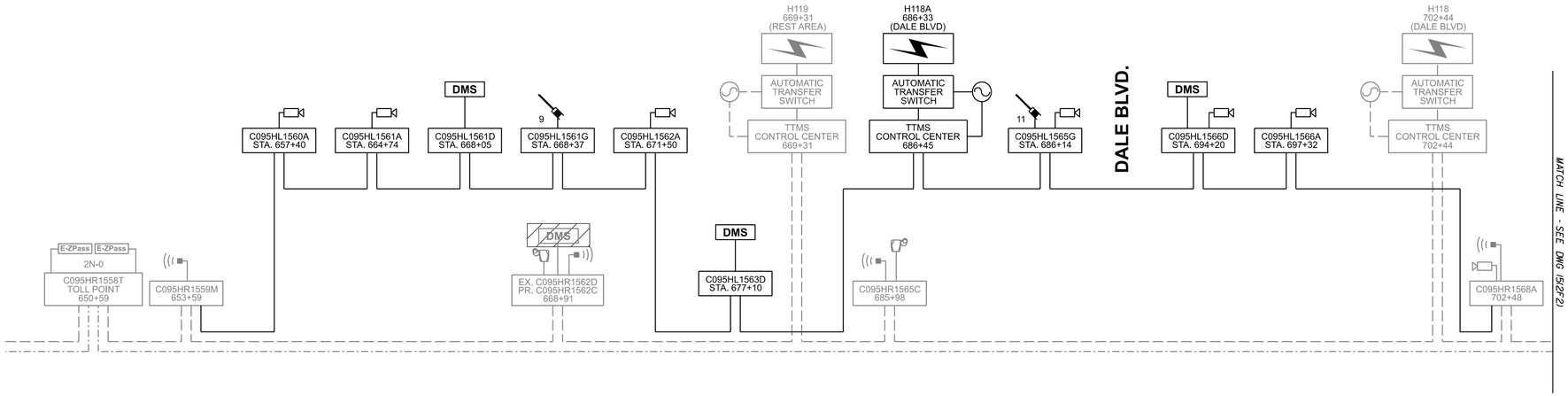

LEGEND

EXISTING	PROPOSED	DESCRIPTION	EXISTING	PROPOSED	DESCRIPTION
— -	——	EXPRESS LANES DISTRIBUTION CABLE	DMS	DMS	DYNAMIC MESSAGE SIGN
- · —	N/A	EXPRESS LANES TRUNK CABLE	E-ZPass	N/A	TOLL TAG READER AND ENFORCEMENT
		GATE	CXXXXXXXXXX XXX+XX	CXXXXXXXXXX XXX+XX	ITS CABINET
		EXPRESS LANES VIDEO CAMERA			UTILITY ELECTRIC SERVICE
		AID CAMERA			
N/A	FIXED CCTV	FIXED CCTV CAMERA			GENERATOR
		MICROWAVE VEHICLE DETECTOR	N/A		EXISTING EQUIPMENT TO BE REMOVED

NOTES:
1. FIBER OPTIC CABLE CONNECTIONS AND FIBER ASSIGNMENTS FOR EXISTING TTMS EQUIPMENT ARE BASED ON AS BUILT PLANS.

AFC PLANS

	PROJECT	SHEET NO.
	0095-076-299	15(2F1)

Roll Revised 12/11/12

7/18/2022 4589300101S(02F2).dgn
7:24:23 PM Plotted By: kfisher

LIMITED ACCESS HIGHWAY By Resolution of the Highway Commission dated October 4, 1956.
By Resolution of the Highway Commission dated January 18, 1973.
By Resolution of the Commonwealth Transportation Board dated April 19, 2022

PROJECT MANAGER Rimpal Shah, P.E. (703) 259-2362 (NOVA District)
SURVEYED BY, DATE H&B Surveying and Mapping, LLC (804) 330-3781, 03/09/2021
DESIGN BY Whitman, Requardt, & Associates, LLP (804) 212-8700
SUBSURFACE UTILITY BY, DATE Accumark, Inc. (804) 550-7740, 07/07/2021

COMMONWEALTH OF VIRGINIA
JEFFREY D. CHENG
Lic. No. 051900
PROFESSIONAL ENGINEER

Jeffrey D Cheng
2022.07.20 15:53:11 -04'00'

Whitman, Requardt & Associates
Baltimore, Maryland
TRAFFIC ENGINEER

REVISED	STATE	STATE ROUTE	STATE PROJECT	SHEET NO.
	VA.	95	0095-076-299,C-501	15(2F2)

DESIGN FEATURES RELATING TO CONSTRUCTION OR TO REGULATION AND CONTROL OF TRAFFIC MAY BE SUBJECT TO CHANGE AS DEEMED NECESSARY BY THE DEPARTMENT

COMMUNICATIONS ARCHITECTURE - XPL

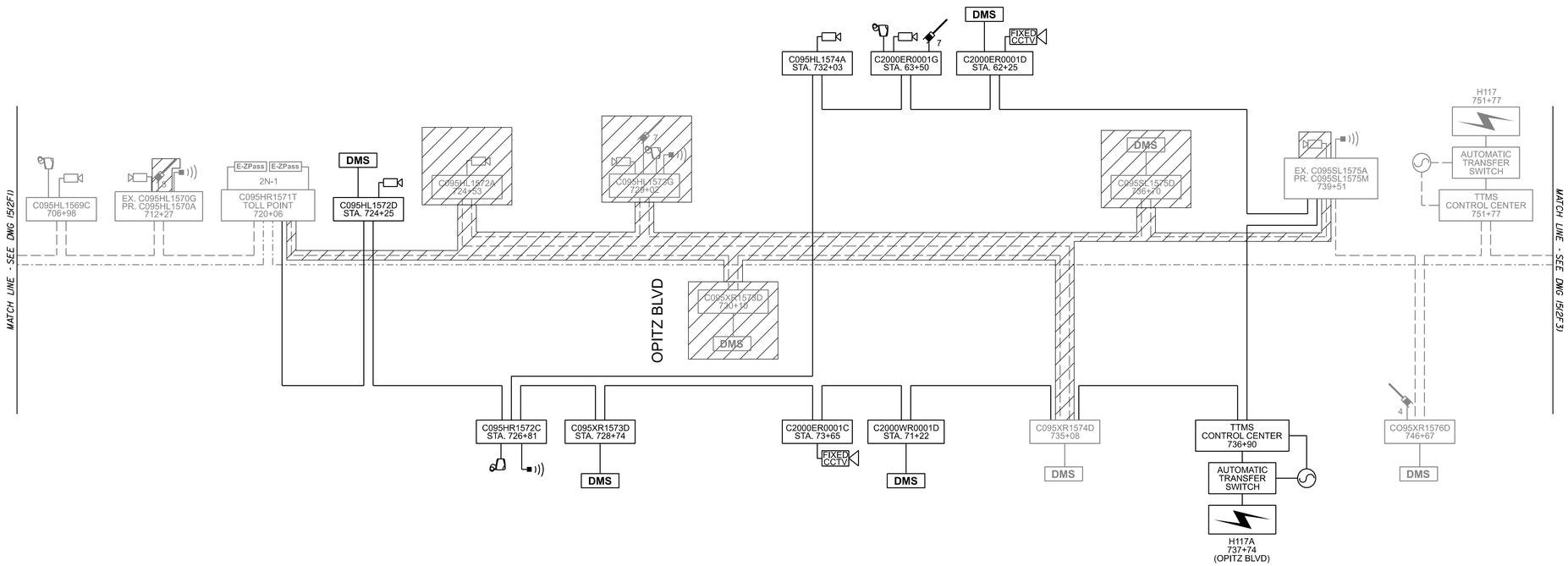

LEGEND

EXISTING	PROPOSED	DESCRIPTION	EXISTING	PROPOSED	DESCRIPTION
— -	——	EXPRESS LANES DISTRIBUTION CABLE	DMS	DMS	DYNAMIC MESSAGE SIGN
-·-	N/A	EXPRESS LANES TRUNK CABLE	E-ZPass	N/A	TOLL TAG READER AND ENFORCEMENT
		GATE	CXXXXXXXXXX XXX+XX	CXXXXXXXXXX XXX+XX	ITS CABINET
		EXPRESS LANES VIDEO CAMERA			UTILITY ELECTRIC SERVICE
		AID CAMERA			
N/A	FIXED CCTV	FIXED CCTV CAMERA			GENERATOR
		MICROWAVE VEHICLE DETECTOR	N/A		EXISTING EQUIPMENT TO BE REMOVED

NOTES:
1. FIBER OPTIC CABLE CONNECTIONS AND FIBER ASSIGNMENTS FOR EXISTING TTMS EQUIPMENT ARE BASED ON AS BUILT PLANS.

AFC PLANS

	PROJECT	SHEET NO.
	0095-076-299	15(2F2)

Fall Revised 12/11/12

7/18/2022 4589300101S(02F3).dgn
7:24:25 PM Plotted By: kfisher

LIMITED ACCESS HIGHWAY

By Resolution of the Highway Commission dated October 4, 1956.
By Resolution of the Highway Commission dated January 18, 1973.
By Resolution of the Commonwealth Transportation Board dated April 19, 2022

PROJECT MANAGER Rimpal Shah, P.E. (703) 259-2362 (NOVA District)
SURVEYED BY, DATE H&B Surveying and Mapping, LLC (804) 330-3781, 03/09/2021
DESIGN BY Whitman, Requardt, & Associates, LLP (804) 212-8700
SUBSURFACE UTILITY BY, DATE Accumark, Inc. (804) 550-7740, 07/07/2021

COMMONWEALTH OF VIRGINIA
JEFFREY D. CHENG
Lic. No. 051900
PROFESSIONAL ENGINEER

Jeffrey D Cheng
2022.07.20 15:54:04 -04'00'

Whitman, Requardt & Associates
Baltimore, Maryland
TRAFFIC ENGINEER

REVISED	STATE	STATE ROUTE	STATE PROJECT	SHEET NO.
	VA.	95	0095-076-299,C-501	15(2F3)

DESIGN FEATURES RELATING TO CONSTRUCTION OR TO REGULATION AND CONTROL OF TRAFFIC MAY BE SUBJECT TO CHANGE AS DEEMED NECESSARY BY THE DEPARTMENT

COMMUNICATIONS ARCHITECTURE - XPL

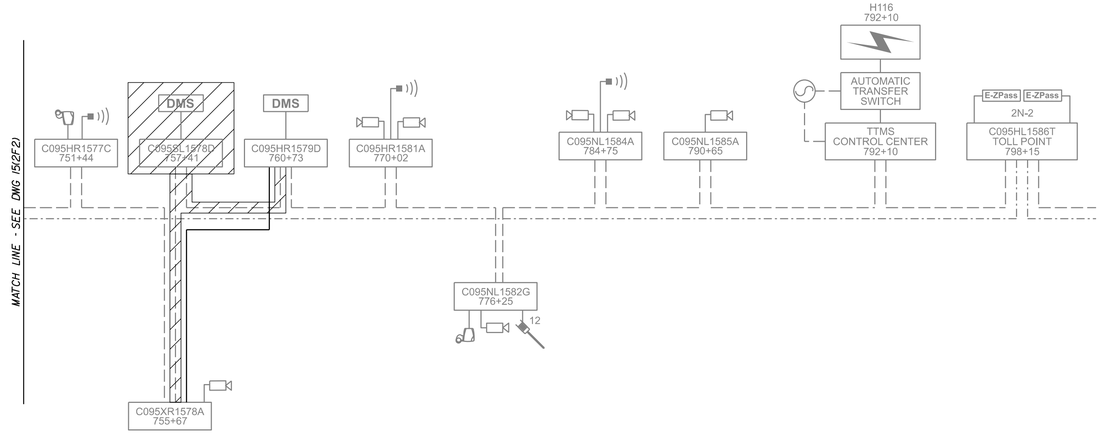

LEGEND

EXISTING	PROPOSED	DESCRIPTION	EXISTING	PROPOSED	DESCRIPTION
— -	——	EXPRESS LANES DISTRIBUTION CABLE	DMS	DMS	DYNAMIC MESSAGE SIGN
-·-	N/A	EXPRESS LANES TRUNK CABLE	E-ZPass	N/A	TOLL TAG READER AND ENFORCEMENT
		GATE	CXXXXXXXXXX XXX+XX	CXXXXXXXXXX XXX+XX	ITS CABINET
		EXPRESS LANES VIDEO CAMERA			UTILITY ELECTRIC SERVICE
		AID CAMERA			
N/A	FIXED CCTV	FIXED CCTV CAMERA			GENERATOR
		MICROWAVE VEHICLE DETECTOR	N/A		EXISTING EQUIPMENT TO BE REMOVED

NOTES:
1. FIBER OPTIC CABLE CONNECTIONS AND FIBER ASSIGNMENTS FOR EXISTING TTMS EQUIPMENT ARE BASED ON AS BUILT PLANS.

AFC PLANS

PROJECT	SHEET NO.
0095-076-299	15(2F3)

Cell Revised 12/11/12

LIMITED ACCESS HIGHWAY By Resolution of the Highway Commission dated October 4, 1956.
By Resolution of the Highway Commission dated January 18, 1973.
By Resolution of the Commonwealth Transportation Board dated April 19, 2022

PROJECT MANAGER Rimpal Shah, P.E. (703) 259-2362 (NOVA District) _____
SURVEYED BY, DATE B&B Surveying and Mapping, LLC (804) 330-3781, 03/09/2021
DESIGN BY Whitman, Requardt, & Associates, LLP (804) 212-8700 _____.
SUBSURFACE UTILITY BY, DATE Accumark, Inc. (804) 550-7740, 07/07/2021

FIBER CONNECTION DIAGRAM - XPL

NOTES:

1. FIBER OPTIC CABLE CONNECTIONS AND FIBER ASSIGNMENTS FOR EXISTING TTMS EQUIPMENT ARE BASED ON AS BUILT PLANS.
2. THE CONTRACTOR SHALL VERIFY ALL ACTIVE FIBERS AND COORDINATE ANY PROPOSED MODIFICATIONS TO THE EXISTING FIBER (ANY WORK THAT DIRECTLY OR INDIRECTLY IMPACTS THE EXISTING FIBER) WITH THE 95 EXPRESS ENGINEER.
3. ALL FIBERS NOT SHOWN TERMINATED SHALL BE PASSED THROUGH UNCUT OR SHALL BE SPLICED THROUGH.

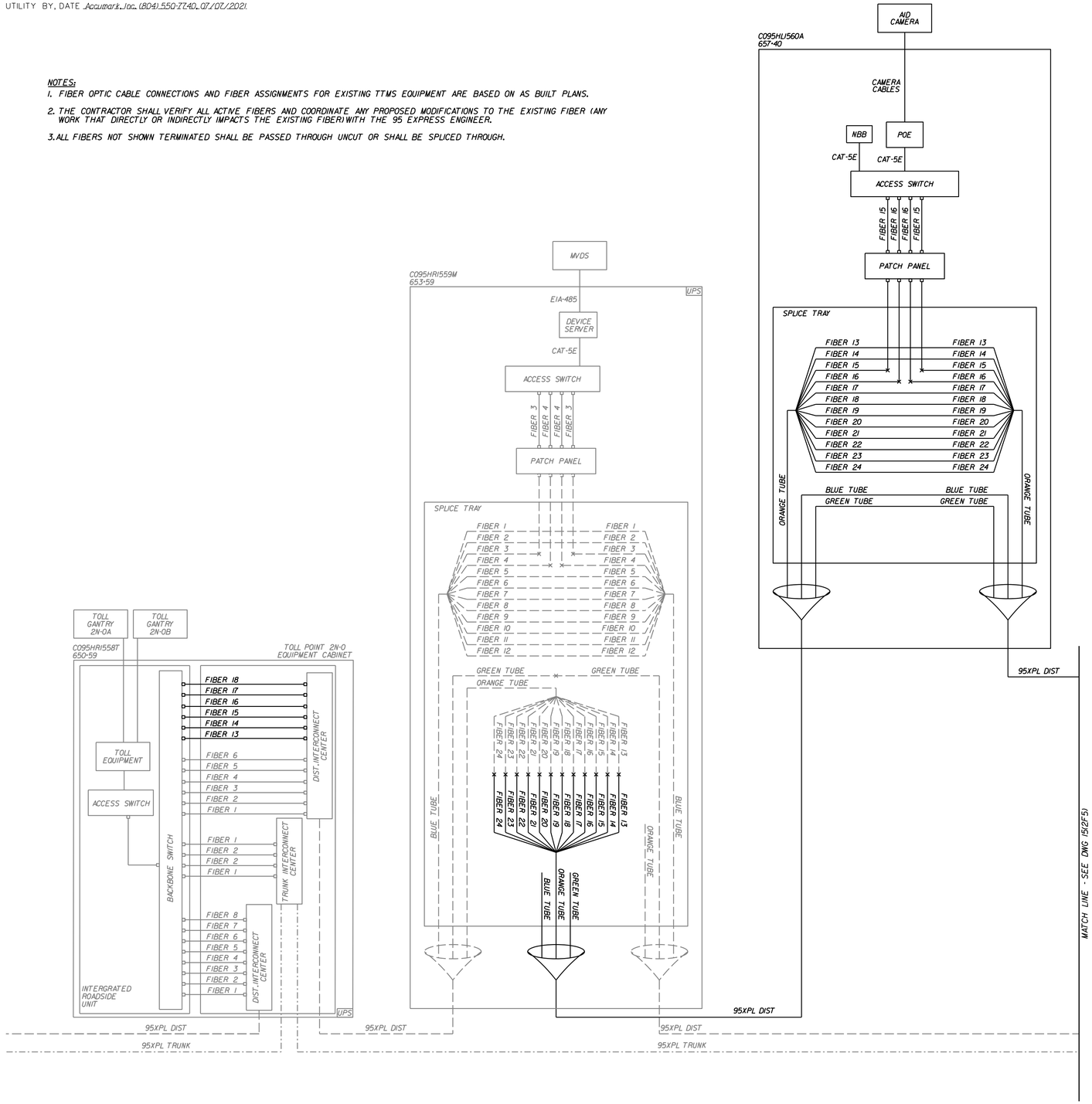

LEGEND		
EXISTING	PROPOSED	DESCRIPTION
		TRUNK
		DISTRIBUTION
		SINGLE MODE FIBER JUMPER
N/A		EXISTING EQUIPMENT TO BE REMOVED
UPS	N/A	CABINETS WITH UNINTERRUPTIBLE POWER SUPPLY

AFC PLANS

COMMONWEALTH OF VIRGINIA
JEFFREY D. CHENG
Lic. No. 051900
PROFESSIONAL ENGINEER

Jeffrey D Cheng
2022.07.20 15:54:27 -04'00'
Whitman, Requardt & Associates
Baltimore, Maryland
TRAFFIC ENGINEER

REVISED	STATE	STATE ROUTE	STATE PROJECT	SHEET NO.
	VA.	95	0095-076-299,C-501	15(2F4)

DESIGN FEATURES RELATING TO CONSTRUCTION OR TO REGULATION AND CONTROL OF TRAFFIC MAY BE SUBJECT TO CHANGE AS DEEMED NECESSARY BY THE DEPARTMENT

	PROJECT	SHEET NO.
	0095-076-299	15(2F4)

Cell Revised 12/11/12

LIMITED ACCESS HIGHWAY

By Resolution of the Highway Commission dated October 4, 1956.
By Resolution of the Highway Commission dated January 18, 1973.
By Resolution of the Commonwealth Transportation Board dated April 19, 2022

PROJECT MANAGER: Rimpal Shah, P.E. (703) 259-2362 (NOVA District) _____
SURVEYED BY, DATE: H&B Surveying and Mapping, LLC (804) 330-3781, 03/09/2021
DESIGN BY: Whitman, Requardt, & Associates, LLP (804) 212-8700 _____
SUBSURFACE UTILITY BY, DATE: Accumark, Inc. (804) 550-7740, 07/07/2021

FIBER CONNECTION DIAGRAM - XPL

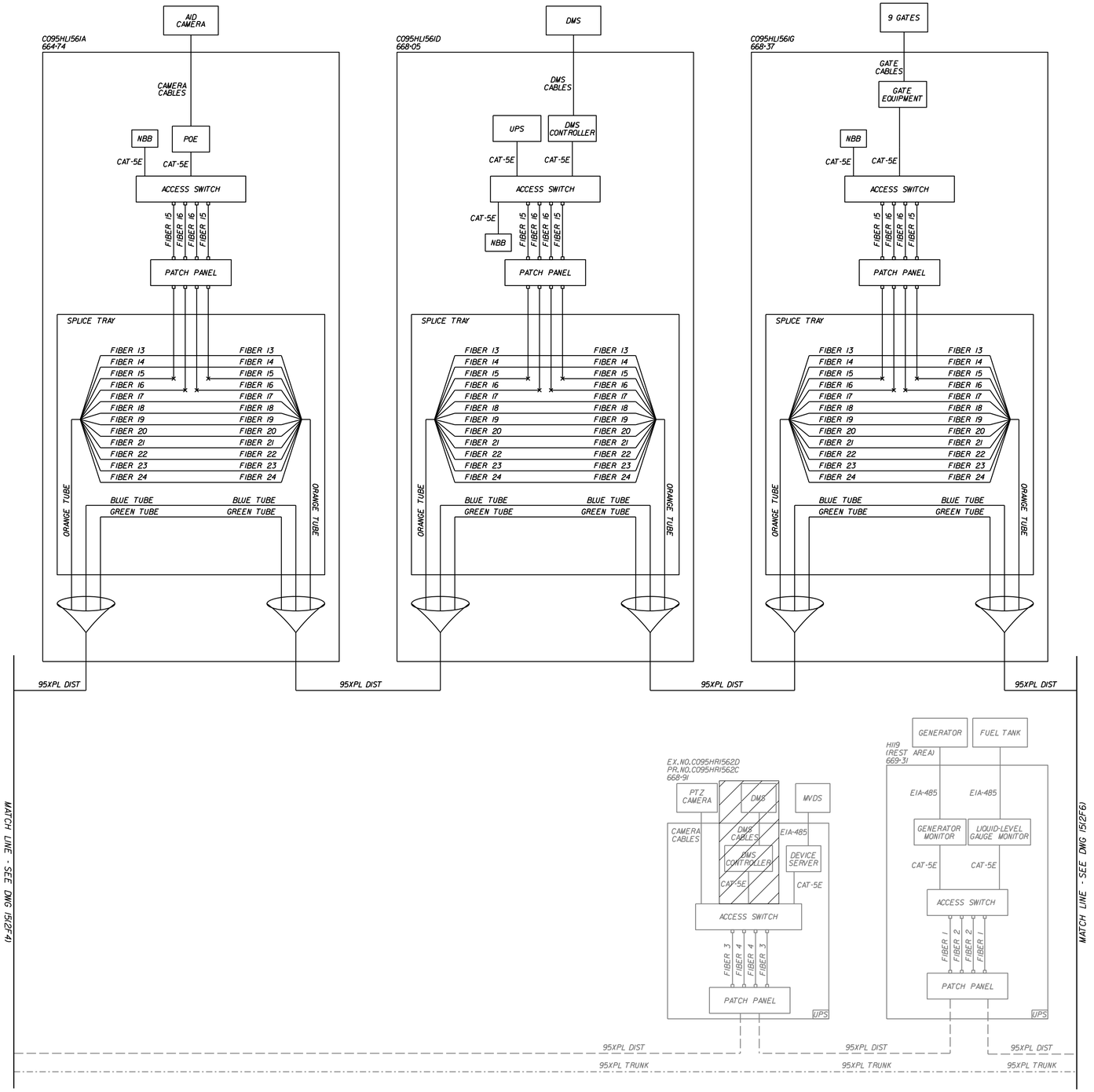

NOTES:
1. FIBER OPTIC CABLE CONNECTIONS AND FIBER ASSIGNMENTS FOR EXISTING TTMS EQUIPMENT ARE BASED ON AS BUILT PLANS.
2. THE CONTRACTOR SHALL VERIFY ALL ACTIVE FIBERS AND COORDINATE ANY PROPOSED MODIFICATIONS TO THE EXISTING FIBER (ANY WORK THAT DIRECTLY OR INDIRECTLY IMPACTS THE EXISTING FIBER) WITH THE 95 EXPRESS ENGINEER.
3. ALL FIBERS NOT SHOWN TERMINATED SHALL BE PASSED THROUGH UNCUT OR SHALL BE SPLICED THROUGH.

LEGEND		
EXISTING	PROPOSED	DESCRIPTION
		TRUNK
		DISTRIBUTION
		SINGLE MODE FIBER JUMPER
N/A		EXISTING EQUIPMENT TO BE REMOVED
UPS	N/A	CABINETS WITH UNINTERRUPTIBLE POWER SUPPLY

AFC PLANS

COMMONWEALTH OF VIRGINIA
JEFFREY D. CHENG
Lic. No. 051900
PROFESSIONAL ENGINEER

Jeffrey D Cheng
2022.07.20 15:54:55 -04'00'

Whitman, Requardt & Associates
Baltimore, Maryland
TRAFFIC ENGINEER

REVISED	STATE	STATE ROUTE	STATE PROJECT	SHEET NO.
	VA.	95	0095-076-299,C-501	15(2F5)

DESIGN FEATURES RELATING TO CONSTRUCTION OR TO REGULATION AND CONTROL OF TRAFFIC MAY BE SUBJECT TO CHANGE AS DEEMED NECESSARY BY THE DEPARTMENT

	PROJECT	SHEET NO.
	0095-076-299	15(2F5)

LIMITED ACCESS HIGHWAY By Resolution of the Highway Commission dated October 4, 1956
By Resolution of the Highway Commission dated January 18, 1973
By Resolution of the Commonwealth Transportation Board dated April 19, 2022

PROJECT MANAGER Rimpal Shah, P.E. (703) 259-2362 (NOVA District)
SURVEYED BY, DATE H&B Surveying and Mapping, LLC (804) 330-3781, 03/09/2021
DESIGN BY Whitman, Requardt, & Associates, LLP (804) 272-8700
SUBSURFACE UTILITY BY, DATE Accumark, Inc. (804) 550-7740, 07/07/2021

FIBER CONNECTION DIAGRAM - XPL

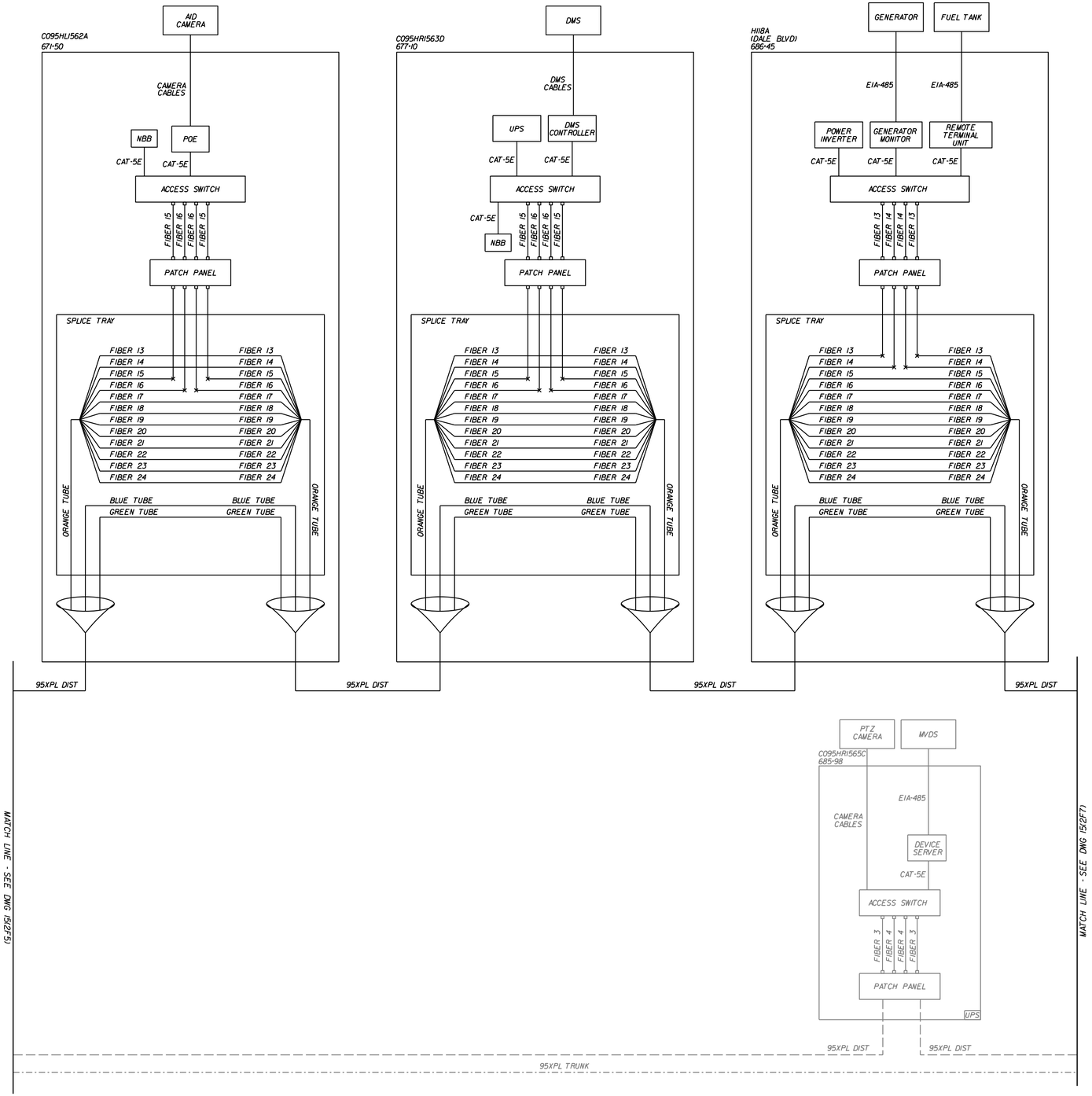

COMMONWEALTH OF VIRGINIA
JEFFREY D. CHENG
Lic. No. 051900
PROFESSIONAL ENGINEER

Jeffrey D Cheng
2022.07.20 15:55:16 -04'00'
Whitman, Requardt & Associates
Baltimore, Maryland
TRAFFIC ENGINEER

REVISED	STATE	STATE ROUTE	STATE PROJECT	SHEET NO.
	VA.	95	0095-076-299,C-501	15(2F6)

DESIGN FEATURES RELATING TO CONSTRUCTION OR TO REGULATION AND CONTROL OF TRAFFIC MAY BE SUBJECT TO CHANGE AS DEEMED NECESSARY BY THE DEPARTMENT

NOTES:

1. FIBER OPTIC CABLE CONNECTIONS AND FIBER ASSIGNMENTS FOR EXISTING TTMS EQUIPMENT ARE BASED ON AS BUILT PLANS.
2. THE CONTRACTOR SHALL VERIFY ALL ACTIVE FIBERS AND COORDINATE ANY PROPOSED MODIFICATIONS TO THE EXISTING FIBER (ANY WORK THAT DIRECTLY OR INDIRECTLY IMPACTS THE EXISTING FIBER) WITH THE 95 EXPRESS ENGINEER.
3. ALL FIBERS NOT SHOWN TERMINATED SHALL BE PASSED THROUGH UNCUT OR SHALL BE SPLICED THROUGH.

LEGEND

EXISTING	PROPOSED	DESCRIPTION
		TRUNK
		DISTRIBUTION
		SINGLE MODE FIBER JUMPER
N/A		EXISTING EQUIPMENT TO BE REMOVED
UPS	N/A	CABINETS WITH UNINTERRUPTIBLE POWER SUPPLY

AFC PLANS

PROJECT	SHEET NO.
0095-076-299	15(2F6)

7/18/2022 4589300101S(02F7).dgn
7:24:32 PM Plotted By: kfisher

LIMITED ACCESS HIGHWAY By Resolution of the Highway Commission dated October 4, 1956.
By Resolution of the Highway Commission dated January 18, 1973.
By Resolution of the Commonwealth Transportation Board dated April 19, 2022

PROJECT MANAGER Rimpal Shah, P.E. (703) 259-2362 (NOVA District) _____
SURVEYED BY, DATE H&B Surveying and Mapping, LLC (804) 330-3781, 03/09/2021
DESIGN BY Whitman, Requardt, & Associates, LLP (804) 212-8700 _____
SUBSURFACE UTILITY BY, DATE Accutark, Inc. (804) 550-7740, 07/07/2021

FIBER CONNECTION DIAGRAM - XPL

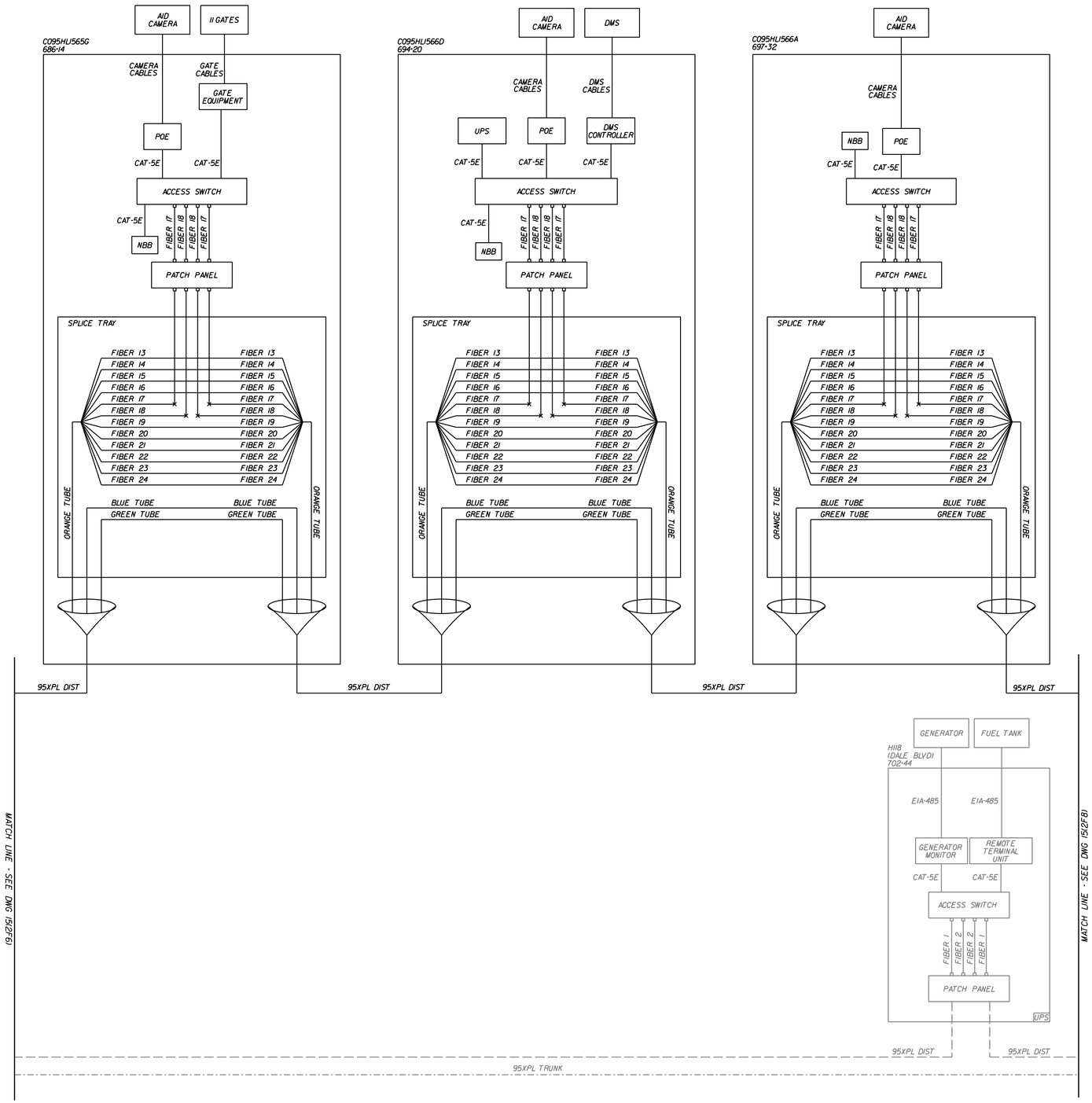

NOTES:
1. FIBER OPTIC CABLE CONNECTIONS AND FIBER ASSIGNMENTS FOR EXISTING TTMS EQUIPMENT ARE BASED ON AS BUILT PLANS.

2. THE CONTRACTOR SHALL VERIFY ALL ACTIVE FIBERS AND COORDINATE ANY PROPOSED MODIFICATIONS TO THE EXISTING FIBER (ANY WORK THAT DIRECTLY OR INDIRECTLY IMPACTS THE EXISTING FIBER) WITH THE 95 EXPRESS ENGINEER.

3. ALL FIBERS NOT SHOWN TERMINATED SHALL BE PASSED THROUGH UNCUT OR SHALL BE SPLICED THROUGH.

LEGEND		
EXISTING	PROPOSED	DESCRIPTION
		TRUNK
		DISTRIBUTION
		SINGLE MODE FIBER JUMPER
N/A		EXISTING EQUIPMENT TO BE REMOVED
UPS	N/A	CABINETS WITH UNINTERRUPTIBLE POWER SUPPLY

AFC PLANS

COMMONWEALTH OF VIRGINIA
JEFFREY D. CHENG
Lic. No. 051900
PROFESSIONAL ENGINEER

Jeffrey D Cheng
2022.07.20 15:55:39 -04'00'

Whitman, Requardt & Associates
Baltimore, Maryland
TRAFFIC ENGINEER

REVISED	STATE	STATE ROUTE	STATE PROJECT	SHEET NO.
	VA.	95	0095-076-299,C-501	15(2F7)

DESIGN FEATURES RELATING TO CONSTRUCTION OR TO REGULATION AND CONTROL OF TRAFFIC MAY BE SUBJECT TO CHANGE AS DEEMED NECESSARY BY THE DEPARTMENT

	PROJECT	SHEET NO.
	0095-076-299	15(2F7)

Cell Revised 12/11/12

7/19/2022 4589300101S(02F8).dgn
2:02:22 PM Plotted By: kfisher

LIMITED ACCESS HIGHWAY

By Resolution of the Highway Commission dated October 4, 1956.
By Resolution of the Highway Commission dated January 18, 1973.
By Resolution of the Commonwealth Transportation Board dated April 19, 2022

PROJECT MANAGER: Rimpal Shah, P.E. (703) 259-2362 (NOVA District) _____
SURVEYED BY, DATE: H&B Surveying and Mapping, LLC (804) 330-3781, 03/09/2021
DESIGN BY: Whitman, Requardt & Associates, LLP (804) 212-8700 _____.
SUBSURFACE UTILITY BY, DATE: Accumark, Inc. (804) 550-7740, 07/07/2021

FIBER CONNECTION DIAGRAM - XPL

COMMONWEALTH OF VIRGINIA
JEFFREY D. CHENG
Lic. No. 051900
PROFESSIONAL ENGINEER

Jeffrey D Cheng
2022.07.20 15:56:00 -04'00'

Whitman, Requardt & Associates
Baltimore, Maryland
TRAFFIC ENGINEER

REVISED	STATE	STATE ROUTE	STATE PROJECT	SHEET NO.
	VA.	95	0095-076-299,C-501	15(2F8)

DESIGN FEATURES RELATING TO CONSTRUCTION OR TO REGULATION AND CONTROL OF TRAFFIC MAY BE SUBJECT TO CHANGE AS DEEMED NECESSARY BY THE DEPARTMENT

NOTES:

1. FIBER OPTIC CABLE CONNECTIONS AND FIBER ASSIGNMENTS FOR EXISTING TTMS EQUIPMENT ARE BASED ON AS BUILT PLANS.
2. THE CONTRACTOR SHALL VERIFY ALL ACTIVE FIBERS AND COORDINATE ANY PROPOSED MODIFICATIONS TO THE EXISTING FIBER (ANY WORK THAT DIRECTLY OR INDIRECTLY IMPACTS THE EXISTING FIBER) WITH THE 95 EXPRESS ENGINEER.
3. ALL FIBERS NOT SHOWN TERMINATED SHALL BE PASSED THROUGH UNCUT OR SHALL BE SPLICED THROUGH.
4. INSTALL NEW INTERCONNECT CENTER IN EXISTING EQUIPMENT RACK. THE EXISTING INTERCONNECT CENTER SHALL BE REMOVED FROM THE CABINET AFTER ALL EXISTING EQUIPMENT HAS BEEN REMOVED OR TRANSITIONED OFF OF THE EXISTING DISTRIBUTION FIBER CABLE THAT IS SHOWN TO BE REMOVED.

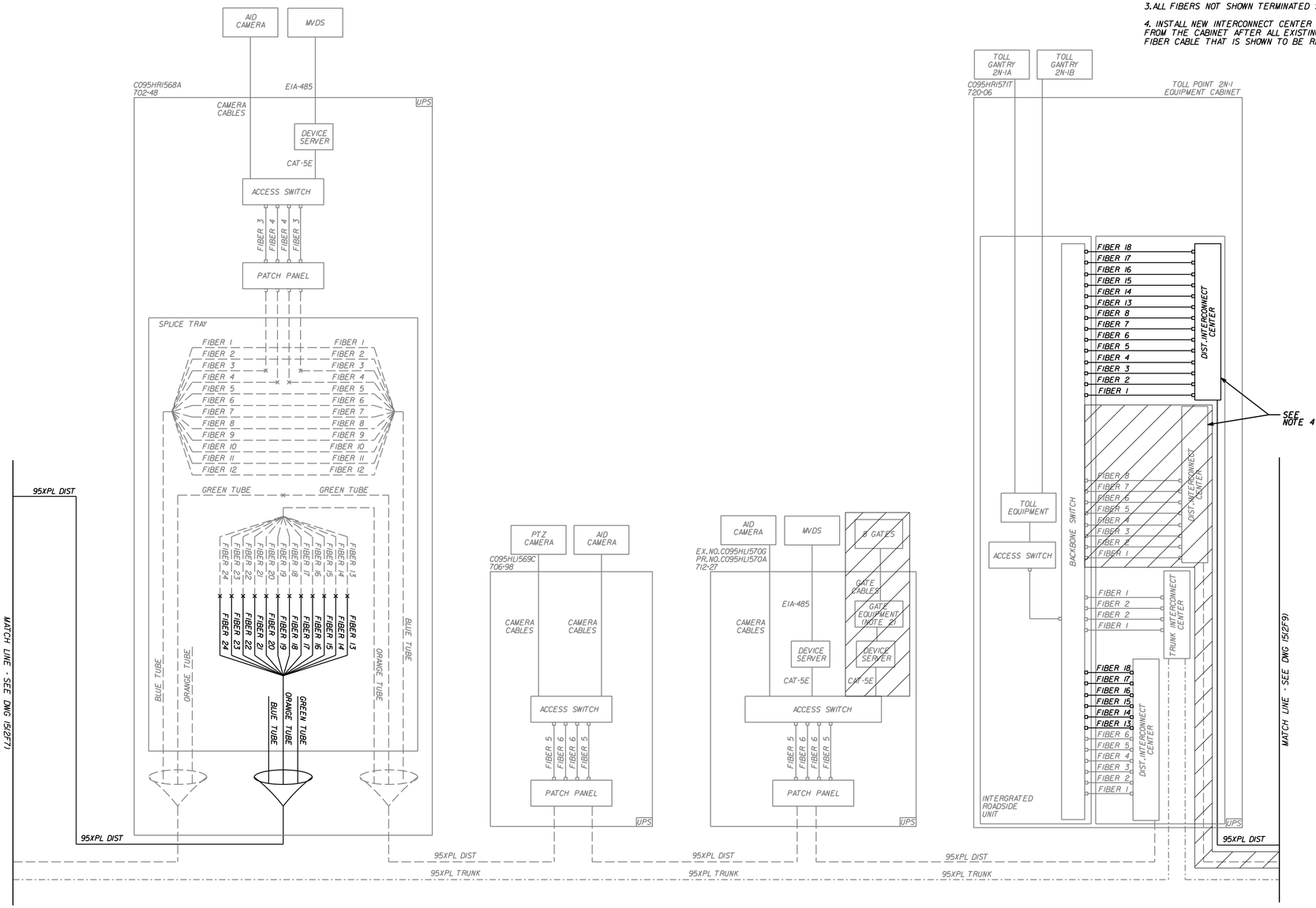

LEGEND		
EXISTING	PROPOSED	DESCRIPTION
		TRUNK
		DISTRIBUTION
		SINGLE MODE FIBER JUMPER
N/A		EXISTING EQUIPMENT TO BE REMOVED
UPS	N/A	CABINETS WITH UNINTERRUPTIBLE POWER SUPPLY

AFC PLANS

	PROJECT	SHEET NO.
	0095-076-299	15(2F8)

7/18/2022 4589300101S(02F9).dgn
7:24:35 PM Plotted By: kfisher

LIMITED ACCESS HIGHWAY

By Resolution of the Highway Commission dated October 4, 1956.
By Resolution of the Highway Commission dated January 18, 1973.
By Resolution of the Commonwealth Transportation Board dated April 19, 2022

PROJECT MANAGER: Rimpal Shah, P.E. (703) 259-2362 (NOVA District) _____
SURVEYED BY, DATE: H&B Surveying and Mapping, LLC (804) 330-3781, 03/09/2021
DESIGN BY: Whitman, Requardt & Associates, LLP (804) 212-8700 _____
SUBSURFACE UTILITY BY, DATE: Accumark Inc. (804) 550-7740, 07/07/2021

FIBER CONNECTION DIAGRAM - XPL

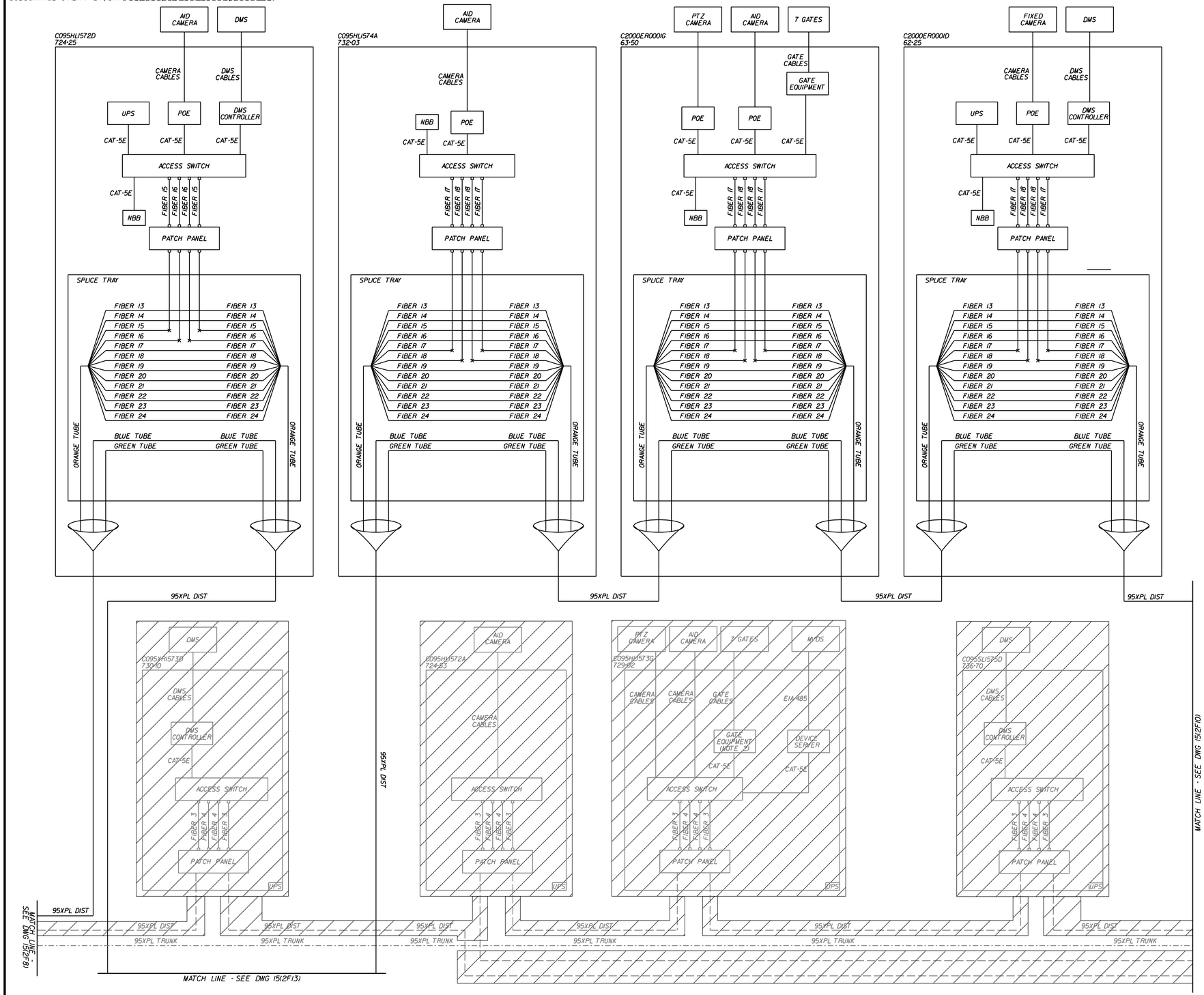

NOTES:
1. FIBER OPTIC CABLE CONNECTIONS AND FIBER ASSIGNMENTS FOR EXISTING TTMS EQUIPMENT ARE BASED ON AS BUILT PLANS.

2. THE CONTRACTOR SHALL VERIFY ALL ACTIVE FIBERS AND COORDINATE ANY PROPOSED MODIFICATIONS TO THE EXISTING FIBER (ANY WORK THAT DIRECTLY OR INDIRECTLY IMPACTS THE EXISTING FIBER) WITH THE 95 EXPRESS ENGINEER.

3. ALL FIBERS NOT SHOWN TERMINATED SHALL BE PASSED THROUGH UNCUT OR SHALL BE SPLICED THROUGH.

LEGEND

EXISTING	PROPOSED	DESCRIPTION
		TRUNK
		DISTRIBUTION
		SINGLE MODE FIBER JUMPER
N/A		EXISTING EQUIPMENT TO BE REMOVED
UPS	N/A	CABINETS WITH UNINTERRUPTIBLE POWER SUPPLY

AFC PLANS

COMMONWEALTH OF VIRGINIA
JEFFREY D. CHENG
Lic. No. 051900
PROFESSIONAL ENGINEER

Jeffrey D Cheng
2022.07.20 15:56:26 -04'00'
Whitman, Requardt & Associates
Baltimore, Maryland
TRAFFIC ENGINEER

DESIGN FEATURES RELATING TO CONSTRUCTION OR TO REGULATION AND CONTROL OF TRAFFIC MAY BE SUBJECT TO CHANGE AS DEEMED NECESSARY BY THE DEPARTMENT

REVISED	STATE	STATE ROUTE	STATE PROJECT	SHEET NO.
	VA.	95	0095-076-299,C-501	15(2F9)

PROJECT	SHEET NO.
0095-076-299	15(2F9)

7/20/2022 4589300101S(02F10).dgn
3:24:31 PM Plotted By: pconstant1no

LIMITED ACCESS HIGHWAY By Resolution of the Highway Commission dated October 4, 1956.
By Resolution of the Highway Commission dated January 18, 1973.
By Resolution of the Commonwealth Transportation Board dated April 19, 2022

PROJECT MANAGER Rimpal Shah, P.E. (703) 259-2362 (NOVA District) _____
SURVEYED BY, DATE H&B Surveying and Mapping, LLC (804) 330-3781, 03/09/2021
DESIGN BY Whitman, Requardt, & Associates, LLP (804) 212-8700 _____
SUBSURFACE UTILITY BY, DATE Accumark, Inc. (804) 550-7740, 07/07/2021

FIBER CONNECTION DIAGRAM - XPL

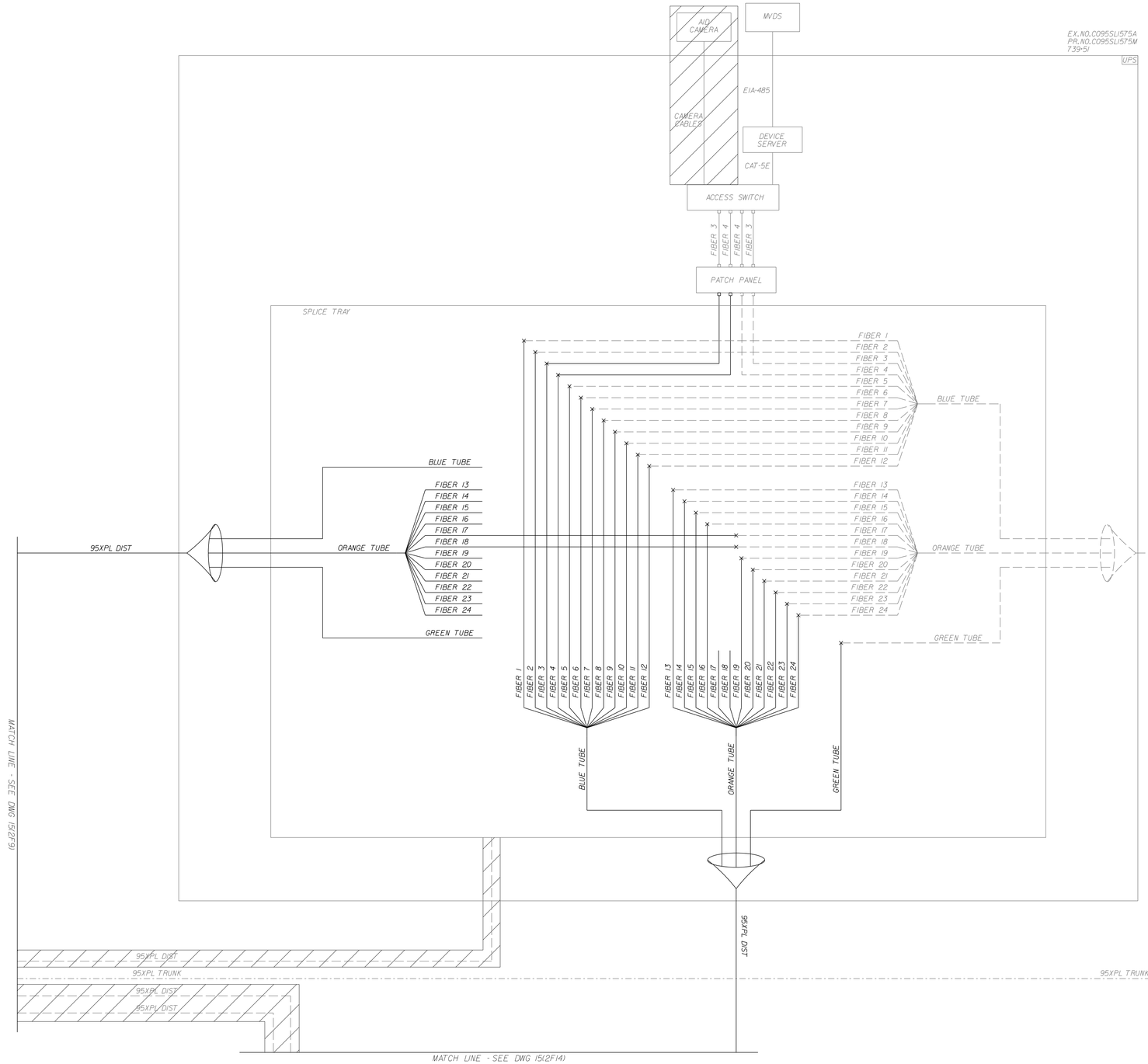

LEGEND		
EXISTING	PROPOSED	DESCRIPTION
		TRUNK
		DISTRIBUTION
		SINGLE MODE FIBER JUMPER
N/A		EXISTING EQUIPMENT TO BE REMOVED
UPS	N/A	CABINETS WITH UNINTERRUPTIBLE POWER SUPPLY

NOTES.
1. FIBER OPTIC CABLE CONNECTIONS AND FIBER ASSIGNMENTS FOR EXISTING TTMS EQUIPMENT ARE BASED ON AS BUILT PLANS.

2. THE CONTRACTOR SHALL VERIFY ALL ACTIVE FIBERS AND COORDINATE ANY PROPOSED MODIFICATIONS TO THE EXISTING FIBER (ANY WORK THAT DIRECTLY OR INDIRECTLY IMPACTS THE EXISTING FIBER) WITH THE 95 EXPRESS ENGINEER.

3. ALL FIBERS NOT SHOWN TERMINATED SHALL BE PASSED THROUGH UNCUT OR SHALL BE SPLICED THROUGH.

COMMONWEALTH OF VIRGINIA
JEFFREY D. CHENG
Lic. No. 051900
PROFESSIONAL ENGINEER

Jeffrey D Cheng
2022.07.20 15:56:47 -04'00'

Whitman, Requardt & Associates
Baltimore, Maryland
TRAFFIC ENGINEER

REVISED	STATE	STATE ROUTE	STATE PROJECT	SHEET NO.
	VA.	95	0095-076-299,C-501	15(2F10)

DESIGN FEATURES RELATING TO CONSTRUCTION OR TO REGULATION AND CONTROL OF TRAFFIC MAY BE SUBJECT TO CHANGE AS DEEMED NECESSARY BY THE DEPARTMENT

AFC PLANS

	PROJECT	SHEET NO.
	0095-076-299	15(2F10)

Roll Revised 12/11/12

7/18/2022 4589300101S(02F11).dgn
7:24:42 PM Plotted By: kfisher

LIMITED ACCESS HIGHWAY

By Resolution of the Highway Commission dated October 4, 1956.
By Resolution of the Highway Commission dated January 18, 1973.
By Resolution of the Commonwealth Transportation Board dated April 19, 2022

PROJECT MANAGER Rimpal Shah, P.E. (703) 259-2362 (NOVA District)
SURVEYED BY, DATE H&B Surveying and Mapping, LLC (804) 330-3781, 03/09/2021
DESIGN BY Whitman, Requardt & Associates, LLP (804) 212-8700
SUBSURFACE UTILITY BY, DATE Accumark, Inc. (804) 550-7740, 07/07/2021

REVISED	STATE	STATE ROUTE	STATE PROJECT	SHEET NO.
	VA.	95	0095-076-299,C-501	15(2F11)

DESIGN FEATURES RELATING TO CONSTRUCTION OR TO REGULATION AND CONTROL OF TRAFFIC MAY BE SUBJECT TO CHANGE AS DEEMED NECESSARY BY THE DEPARTMENT

COMMONWEALTH OF VIRGINIA
JEFFREY D. CHENG
Lic. No. 051900
PROFESSIONAL ENGINEER

Jeffrey D Cheng
2022.07.20 15:57:09 -04'00'

Whitman, Requardt & Associates
Baltimore, Maryland
TRAFFIC ENGINEER

FIBER CONNECTION DIAGRAM - XPL

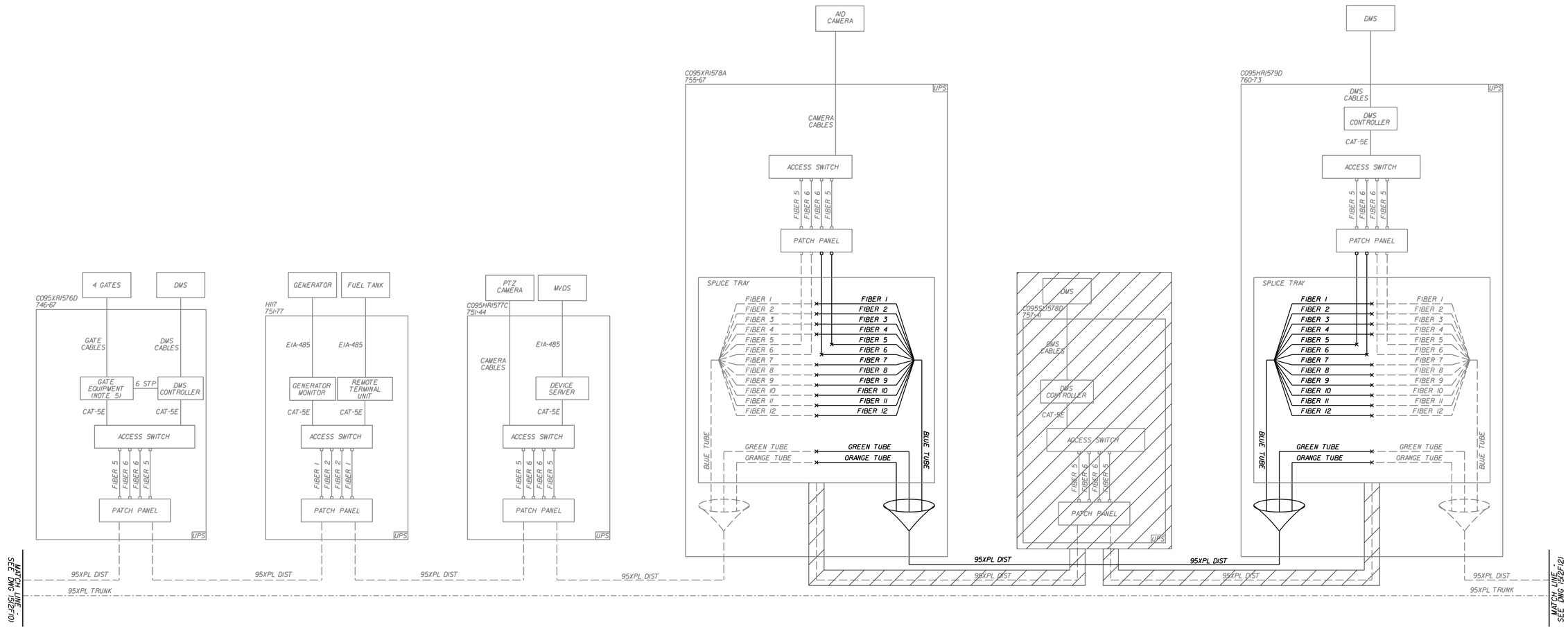

LEGEND		
EXISTING	PROPOSED	DESCRIPTION
		TRUNK
		DISTRIBUTION
		SINGLE MODE FIBER JUMPER
N/A		EXISTING EQUIPMENT TO BE REMOVED
UPS	N/A	CABINETS WITH UNINTERRUPTIBLE POWER SUPPLY

NOTES:
1. FIBER OPTIC CABLE CONNECTIONS AND FIBER ASSIGNMENTS FOR EXISTING TTMS EQUIPMENT ARE BASED ON AS BUILT PLANS.

2. THE CONTRACTOR SHALL VERIFY ALL ACTIVE FIBERS AND COORDINATE ANY PROPOSED MODIFICATIONS TO THE EXISTING FIBER (ANY WORK THAT DIRECTLY OR INDIRECTLY IMPACTS THE EXISTING FIBER) WITH THE 95 EXPRESS ENGINEER.

3. ALL FIBERS NOT SHOWN TERMINATED SHALL BE PASSED THROUGH UNCUT OR SHALL BE SPLICED THROUGH.

AFC PLANS

PROJECT	SHEET NO.
0095-076-299	15(2F11)

Cell Revised 12/11/12

7/18/2022 4589300101S(02F12).dgn
7:24:43 PM Plotted By: kfisher

LIMITED ACCESS HIGHWAY

By Resolution of the Highway Commission dated October 4, 1956.
By Resolution of the Highway Commission dated January 18, 1973.
By Resolution of the Commonwealth Transportation Board dated April 19, 2022

PROJECT MANAGER: Rimpal Shah, P.E. (703) 259-2362 (NOVA District) _____
SURVEYED BY, DATE: H&B Surveying and Mapping, LLC (804) 330-3781, 03/09/2021
DESIGN BY: Whitman, Requardt, & Associates, LLP (804) 212-8700 _____.
SUBSURFACE UTILITY BY, DATE: Accumark, Inc. (804) 550-7740, 07/07/2021

COMMONWEALTH OF VIRGINIA
JEFFREY D. CHENG
Lic. No. 051900
PROFESSIONAL ENGINEER

Jeffrey D Cheng
2022.07.20 15:57:31 -04'00'

Whitman, Requardt & Associates
Baltimore, Maryland
TRAFFIC ENGINEER

REVISED	STATE	STATE ROUTE	STATE PROJECT	SHEET NO.
	VA.	95	0095-076-299,C-501	15(2F12)

DESIGN FEATURES RELATING TO CONSTRUCTION OR TO REGULATION AND CONTROL OF TRAFFIC MAY BE SUBJECT TO CHANGE AS DEEMED NECESSARY BY THE DEPARTMENT

FIBER CONNECTION DIAGRAM - XPL

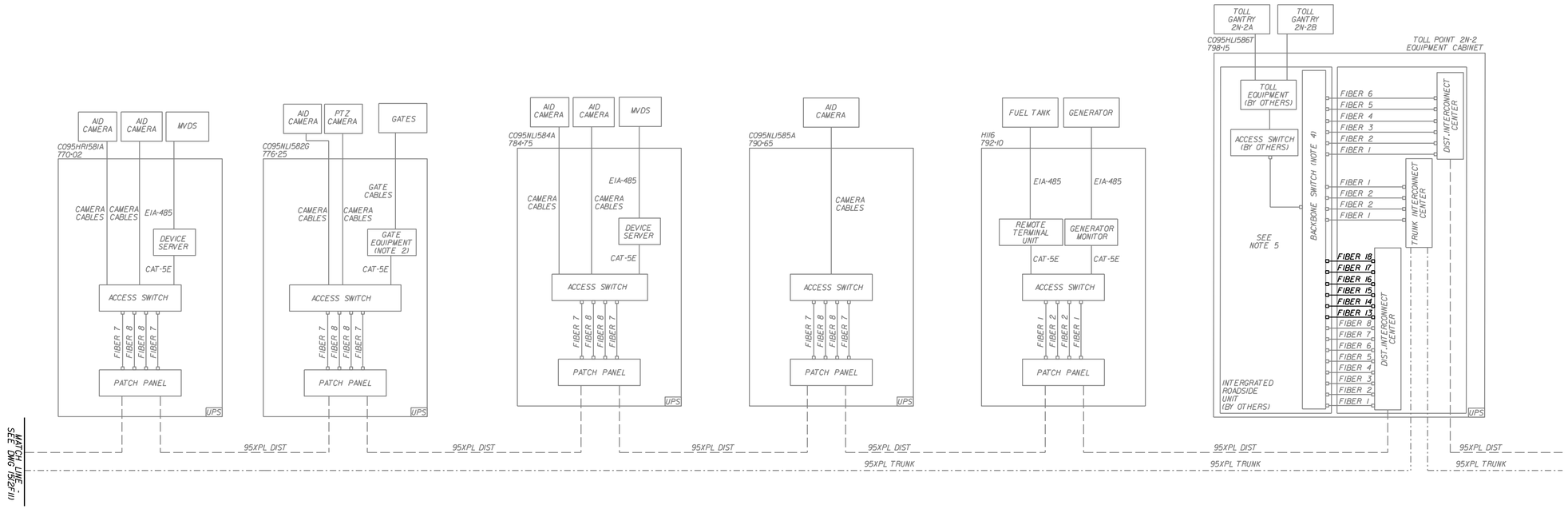

LEGEND		
EXISTING	PROPOSED	DESCRIPTION
		TRUNK
		DISTRIBUTION
		SINGLE MODE FIBER JUMPER
N/A		EXISTING EQUIPMENT TO BE REMOVED
UPS	N/A	CABINETS WITH UNINTERRUPTIBLE POWER SUPPLY

NOTES:
1. FIBER OPTIC CABLE CONNECTIONS AND FIBER ASSIGNMENTS FOR EXISTING TTMS EQUIPMENT ARE BASED ON AS BUILT PLANS.

2. THE CONTRACTOR SHALL VERIFY ALL ACTIVE FIBERS AND COORDINATE ANY PROPOSED MODIFICATIONS TO THE EXISTING FIBER (ANY WORK THAT DIRECTLY OR INDIRECTLY IMPACTS THE EXISTING FIBER) WITH THE 95 EXPRESS ENGINEER.

3. ALL FIBERS NOT SHOWN TERMINATED SHALL BE PASSED THROUGH UNCUT OR SHALL BE SPLICED THROUGH.

AFC PLANS

PROJECT	SHEET NO.
0095-076-299	15(2F12)

Roll Revised 12/11/12

LIMITED ACCESS HIGHWAY

By Resolution of the Highway Commission dated October 4, 1956.
By Resolution of the Highway Commission dated January 18, 1973.
By Resolution of the Commonwealth Transportation Board dated April 19, 2022

PROJECT MANAGER: Rimpal Shah, P.E. (703) 259-2362 (NOVA District) _____
SURVEYED BY, DATE: H&B Surveying and Mapping, LLC (804) 330-3781, 03/09/2021
DESIGN BY: Whitman, Requardt, & Associates, LLP (804) 212-8700 _____
SUBSURFACE UTILITY BY, DATE: Accumark, Inc. (804) 550-7740, 07/07/2021

REVISED	STATE	STATE ROUTE	STATE PROJECT	SHEET NO.
	VA.	95	0095-076-299,C-501	15(2F13)

COMMONWEALTH OF VIRGINIA
JEFFREY D. CHENG
Lic. No. 051900
PROFESSIONAL ENGINEER

Jeffrey D Cheng
2022.07.20 15:57:50 -04'00'

Whitman, Requardt & Associates
Baltimore, Maryland
TRAFFIC ENGINEER

DESIGN FEATURES RELATING TO CONSTRUCTION OR TO REGULATION AND CONTROL OF TRAFFIC MAY BE SUBJECT TO CHANGE AS DEEMED NECESSARY BY THE DEPARTMENT

FIBER CONNECTION DIAGRAM - XPL

LEGEND		
EXISTING	PROPOSED	DESCRIPTION
——·—·——	——·—·——	TRUNK
— — —	———	DISTRIBUTION
□——□	□——□	SINGLE MODE FIBER JUMPER
N/A	▨	EXISTING EQUIPMENT TO BE REMOVED
UPS	N/A	CABINETS WITH UNINTERRUPTIBLE POWER SUPPLY

NOTES:
1. FIBER OPTIC CABLE CONNECTIONS AND FIBER ASSIGNMENTS FOR EXISTING TTMS EQUIPMENT ARE BASED ON AS BUILT PLANS.
2. THE CONTRACTOR SHALL VERIFY ALL ACTIVE FIBERS AND COORDINATE ANY PROPOSED MODIFICATIONS TO THE EXISTING FIBER (ANY WORK THAT DIRECTLY OR INDIRECTLY IMPACTS THE EXISTING FIBER) WITH THE 95 EXPRESS ENGINEER.
3. ALL FIBERS NOT SHOWN TERMINATED SHALL BE PASSED THROUGH UNCUT OR SHALL BE SPLICED THROUGH.

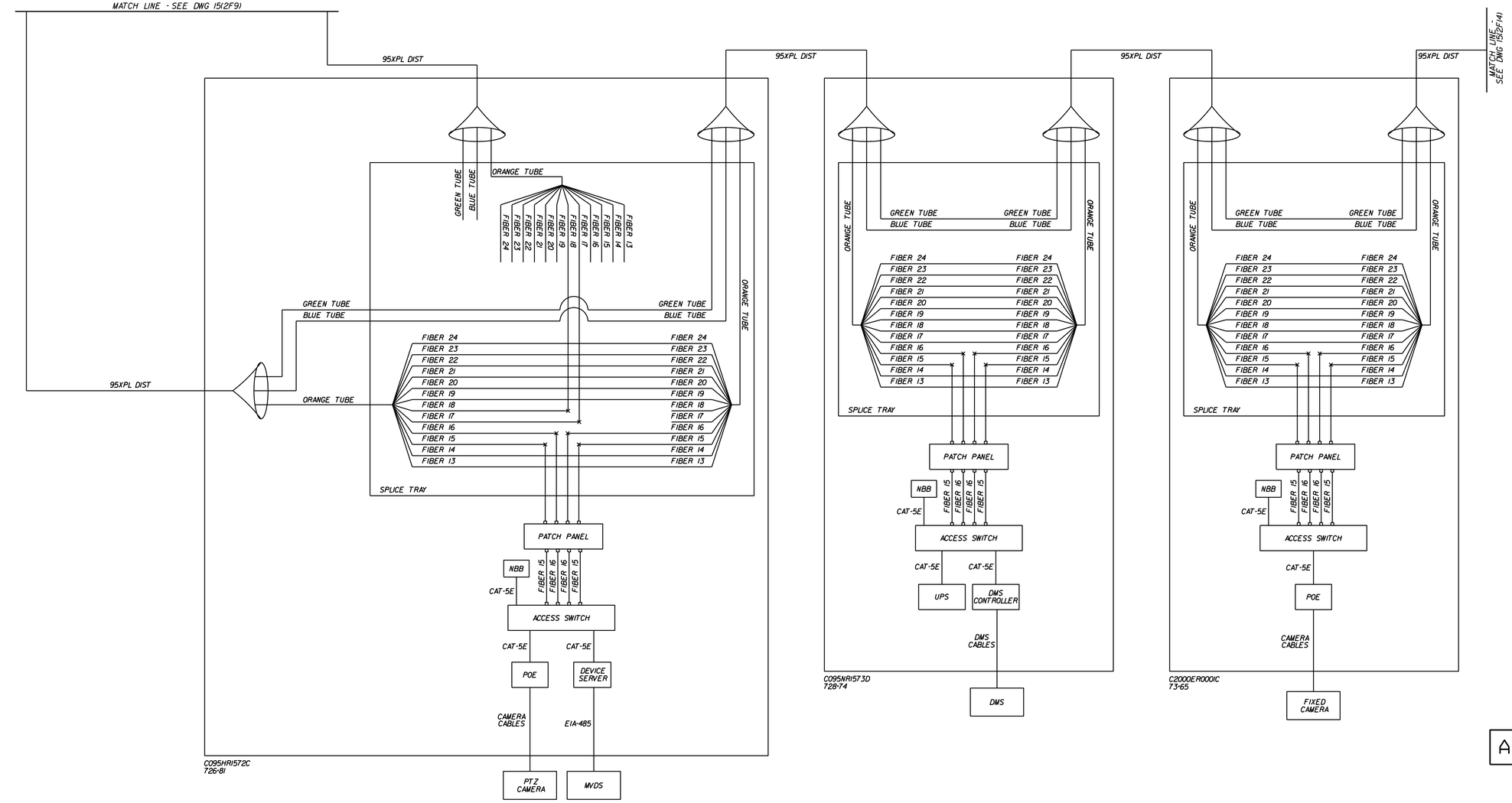

AFC PLANS

	PROJECT	SHEET NO.
	0095-076-299	15(2F13)

Cell Revised 12/11/12

LIMITED ACCESS HIGHWAY

By Resolution of the Highway Commission dated October 4, 1956.
By Resolution of the Highway Commission dated January 18, 1973.
By Resolution of the Commonwealth Transportation Board dated April 19, 2022

PROJECT MANAGER: Rimpal Shah, P.E. (703) 259-2362 (NOVA District) _____
SURVEYED BY, DATE: H&B Surveying and Mapping, LLC (804) 330-3781, 03/09/2021
DESIGN BY: Whitman, Requardt, & Associates, LLP (804) 212-8700 _____.
SUBSURFACE UTILITY BY, DATE: Accutrak, Inc. (804) 550-7740, 07/07/2021

COMMONWEALTH OF VIRGINIA
JEFFREY D. CHENG
Lic. No. 051900
PROFESSIONAL ENGINEER

Jeffrey D Cheng
2022.07.20 15:58:10 -04'00'

Whitman, Requardt & Associates
Baltimore, Maryland
TRAFFIC ENGINEER

REVISED	STATE	STATE ROUTE	STATE PROJECT	SHEET NO.
	VA.	95	0095-076-299,C-501	15(2F14)

DESIGN FEATURES RELATING TO CONSTRUCTION OR TO REGULATION AND CONTROL OF TRAFFIC MAY BE SUBJECT TO CHANGE AS DEEMED NECESSARY BY THE DEPARTMENT

FIBER CONNECTION DIAGRAM - XPL

LEGEND		
EXISTING	PROPOSED	DESCRIPTION
		TRUNK
		DISTRIBUTION
		SINGLE MODE FIBER JUMPER
N/A		EXISTING EQUIPMENT TO BE REMOVED
UPS	N/A	CABINETS WITH UNINTERRUPTIBLE POWER SUPPLY

NOTES:
1. FIBER OPTIC CABLE CONNECTIONS AND FIBER ASSIGNMENTS FOR EXISTING TTMS EQUIPMENT ARE BASED ON AS BUILT PLANS.
2. THE CONTRACTOR SHALL VERIFY ALL ACTIVE FIBERS AND COORDINATE ANY PROPOSED MODIFICATIONS TO THE EXISTING FIBER (ANY WORK THAT DIRECTLY OR INDIRECTLY IMPACTS THE EXISTING FIBER) WITH THE 95 EXPRESS ENGINEER.
3. ALL FIBERS NOT SHOWN TERMINATED SHALL BE PASSED THROUGH UNCUT OR SHALL BE SPLICED THROUGH.

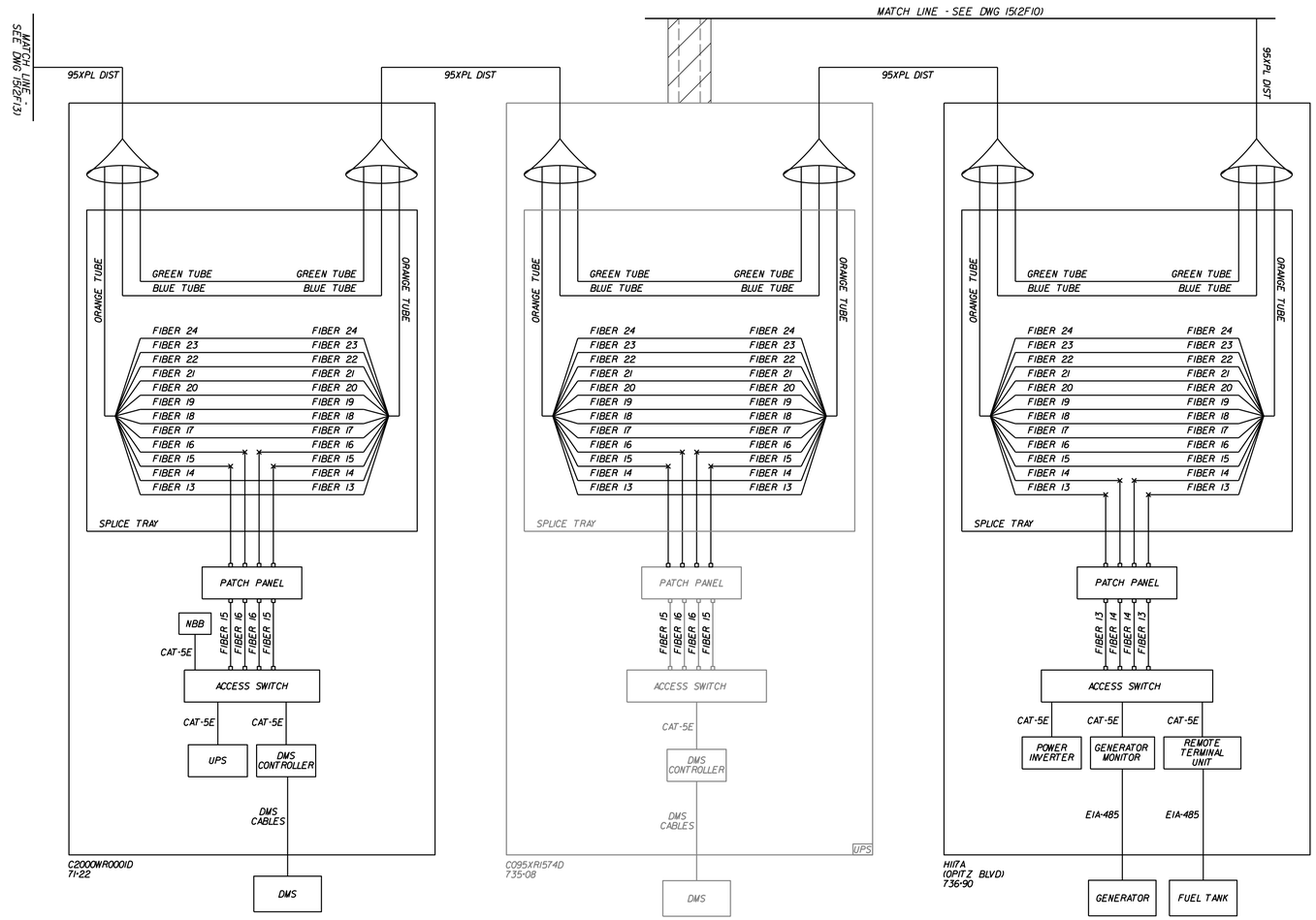

AFC PLANS

PROJECT	SHEET NO.
0095-076-299	15(2F14)

LIMITED ACCESS HIGHWAY

By Resolution of the Highway Commission dated October 4, 1956.
By Resolution of the Highway Commission dated January 18, 1973.
By Resolution of the Commonwealth Transportation Board dated April 19, 2022

PROJECT MANAGER Rimpal Shah, P.E. (703) 259-2362 (NOVA District)
SURVEYED BY, DATE H&B Surveying and Mapping, LLC (804) 330-3781, 03/09/2021
DESIGN BY Whitman, Requardt, & Associates, LLP (804) 212-8700
SUBSURFACE UTILITY BY, DATE Accumark, Inc. (804) 550-7740, 07/07/2021

COMMONWEALTH OF VIRGINIA
JEFFREY D. CHENG
Lic. No. 051900
PROFESSIONAL ENGINEER

Jeffrey D Cheng
2022.07.20 15:58:30 -04'00'

Whitman, Requardt & Associates
Baltimore, Maryland
TRAFFIC ENGINEER

REVISED	STATE	STATE ROUTE	STATE PROJECT	SHEET NO.
	VA.	95	0095-076-299,C-501	15(2F15)

DESIGN FEATURES RELATING TO CONSTRUCTION OR TO REGULATION AND CONTROL OF TRAFFIC MAY BE SUBJECT TO CHANGE AS DEEMED NECESSARY BY THE DEPARTMENT

COMMUNICATIONS ARCHITECTURE - VDOT

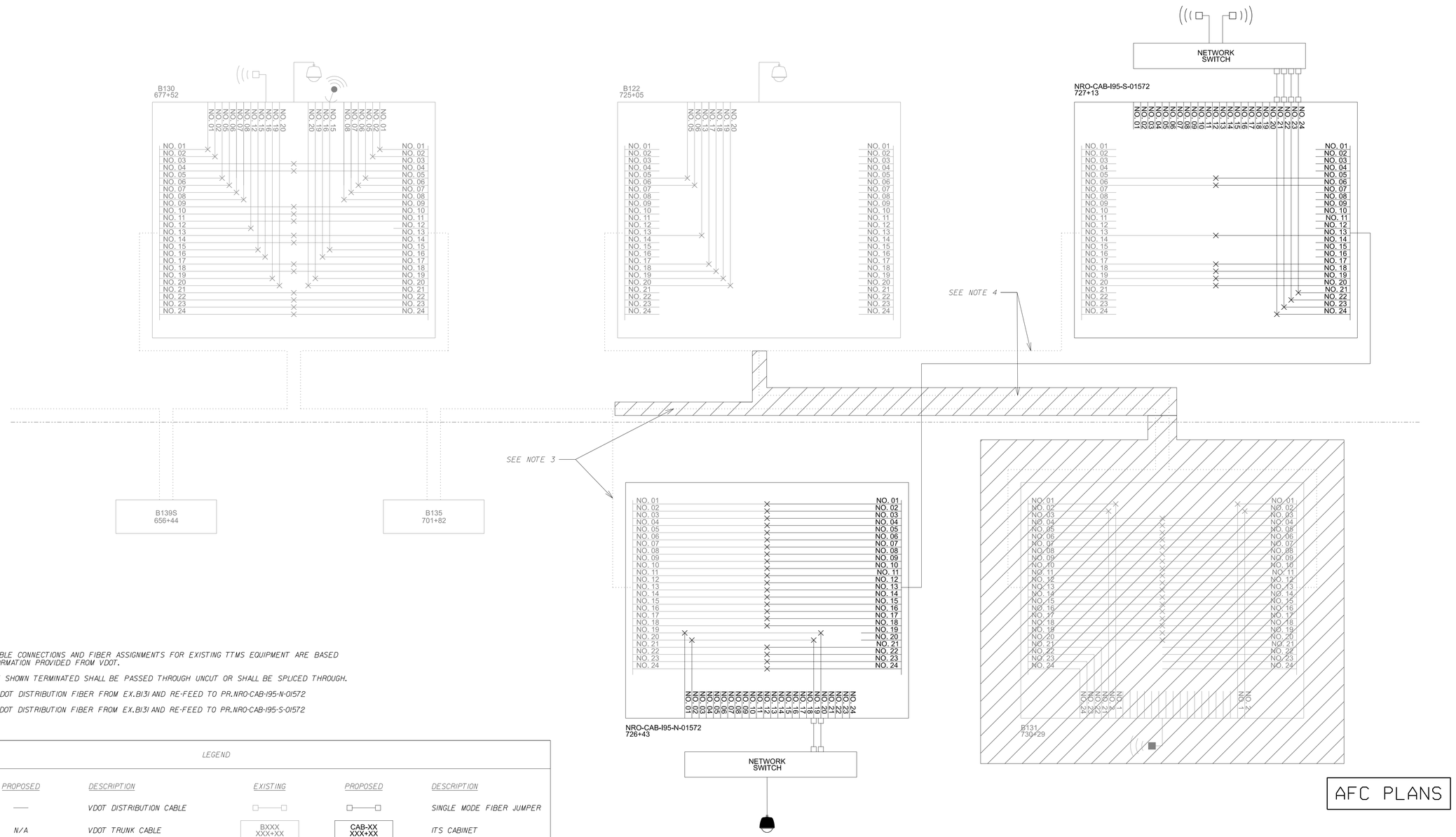

NOTES:

1. FIBER OPTIC CABLE CONNECTIONS AND FIBER ASSIGNMENTS FOR EXISTING TTMS EQUIPMENT ARE BASED ON AS BUILT INFORMATION PROVIDED FROM VDOT.
2. ALL FIBERS NOT SHOWN TERMINATED SHALL BE PASSED THROUGH UNCUT OR SHALL BE SPLICED THROUGH.
3. PULL BACK EX.VDOT DISTRIBUTION FIBER FROM EX.BI31 AND RE-FEED TO PR.NRO-CAB-I95-N-01572
4. PULL BACK EX.VDOT DISTRIBUTION FIBER FROM EX.BI31 AND RE-FEED TO PR.NRO-CAB-I95-S-01572

LEGEND

EXISTING	PROPOSED	DESCRIPTION	EXISTING	PROPOSED	DESCRIPTION
·····	——	VDOT DISTRIBUTION CABLE	□—□	□—□	SINGLE MODE FIBER JUMPER
– – – –	N/A	VDOT TRUNK CABLE	BXXX XXX+XX	CAB-XX XXX+XX	ITS CABINET
□))))	□))))	VDOT MICROWAVE VEHICLE DETECTOR	N/A		EXISTING EQUIPMENT TO BE REMOVED
		VDOT CCTV CAMERA	×	×	FIBER SPLICE
	N/A	RADIO EQUIPMENT			

AFC PLANS

PROJECT	SHEET NO.
0095-076-299	15(2F15)

LIMITED ACCESS HIGHWAY

By Resolution of the Highway Commission dated October 4, 1956.
By Resolution of the Highway Commission dated January 18, 1973.
By Resolution of the Commonwealth Transportation Board dated April 19, 2022

PROJECT MANAGER: Rimpal Shah, P.E. (703) 259-2362 (NOVA District)
SURVEYED BY, DATE: H&B Surveying and Mapping, LLC (804) 330-3781, 03/09/2021
DESIGN BY: Whitman, Requardt, & Associates, LLP (804) 212-8700
SUBSURFACE UTILITY BY, DATE: Accutrark, Inc. (804) 550-7740, 07/07/2021

COMMONWEALTH OF VIRGINIA
JEFFREY D. CHENG
Lic. No. 051900
PROFESSIONAL ENGINEER

Jeffrey D Cheng
2022.07.20 15:58:51 -04'00'

Whitman, Requardt & Associates
Baltimore, Maryland
TRAFFIC ENGINEER

REVISED	STATE	STATE ROUTE	STATE PROJECT	SHEET NO.
	VA.	95	0095-076-299,C-501	15(2GI)

DESIGN FEATURES RELATING TO CONSTRUCTION OR TO REGULATION AND CONTROL OF TRAFFIC MAY BE SUBJECT TO CHANGE AS DEEMED NECESSARY BY THE DEPARTMENT

AID POLE & C095HLI560A
STA. 657+40, XPL CONST. ℄

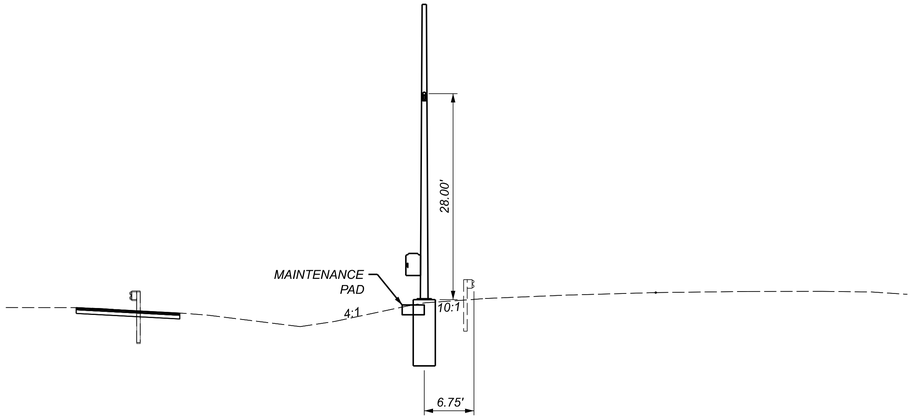

AID POLE & C095HLI561A
STA. 664+61, XPL CONST. ℄

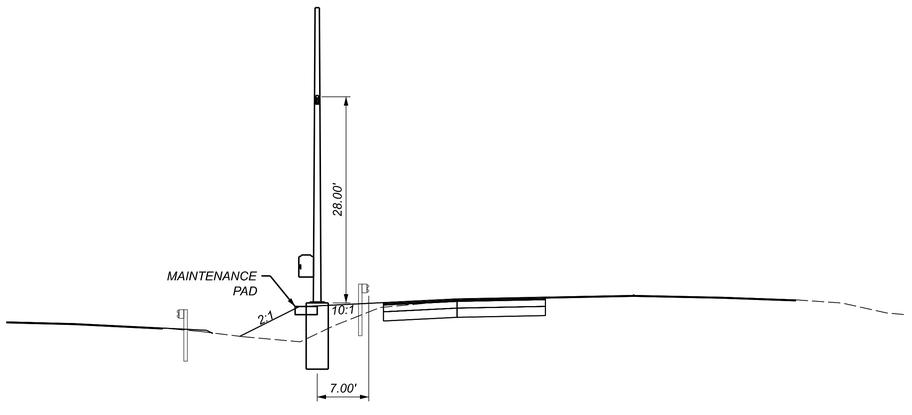

C095HLI561D
STA. 667+95, XPL CONST. ℄

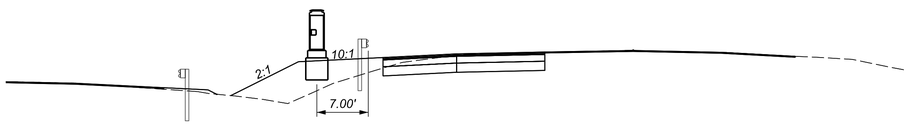

C095HLI561G
STA. 668+27, XPL CONST. ℄

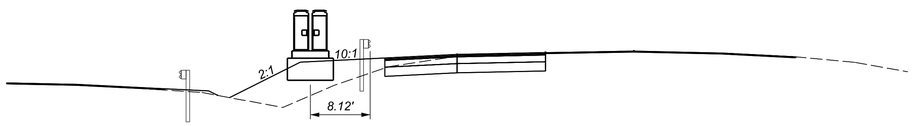

AFC PLANS

	PROJECT	SHEET NO.
	0095-076-299	15(2GI)

7/20/2022 4589300101S(02G2).dgn
6:09:49 PM Plotted By: sdallna

LIMITED ACCESS HIGHWAY By Resolution of the Highway Commission dated October 4, 1956.
By Resolution of the Highway Commission dated January 18, 1973.
By Resolution of the Commonwealth Transportation Board dated April 19, 2022

PROJECT MANAGER Rimpal Shah, P.E. (703) 259-2362 (NOVA District) _____
SURVEYED BY, DATE H&B Surveying and Mapping, LLC (804) 330-3781, 03/09/2021
DESIGN BY Whitman, Requardt, & Associates, LLP (804) 212-8700 _____.
SUBSURFACE UTILITY BY, DATE Accumark, Inc. (804) 550-7740, 07/07/2021

COMMONWEALTH OF VIRGINIA
JEFFREY D. CHENG
Lic. No. 051900
PROFESSIONAL ENGINEER

Jeffrey D Cheng
2022.07.20 18:10:56 -04'00'

Whitman, Requardt & Associates
Baltimore, Maryland
TRAFFIC ENGINEER

REVISED	STATE	STATE ROUTE	STATE PROJECT	SHEET NO.
	VA.	95	0095-076-299,C-501	I5(2G2)

DESIGN FEATURES RELATING TO CONSTRUCTION OR TO REGULATION AND CONTROL OF TRAFFIC MAY BE SUBJECT TO CHANGE AS DEEMED NECESSARY BY THE DEPARTMENT

AID POLE & C095HLI562A
STA. 671+50, XPL CONST. B

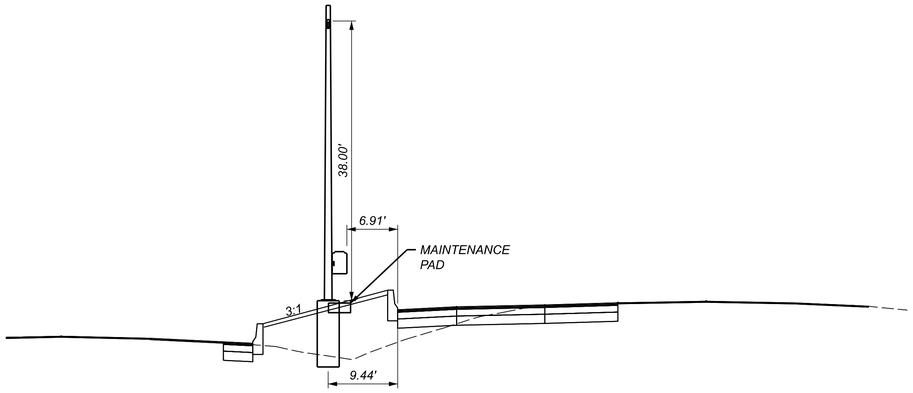

C095HRI563D
STA. 677+10, XPL CONST. B

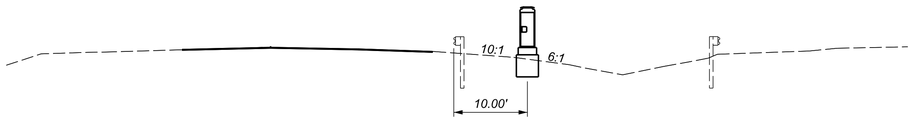

C095HLI565G
STA. 686+14, XPL CONST. ℄

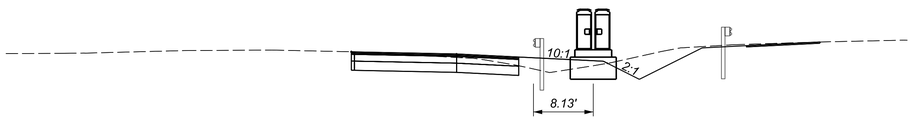

AID POLE
STA. 686+75, XPL CONST. ℄

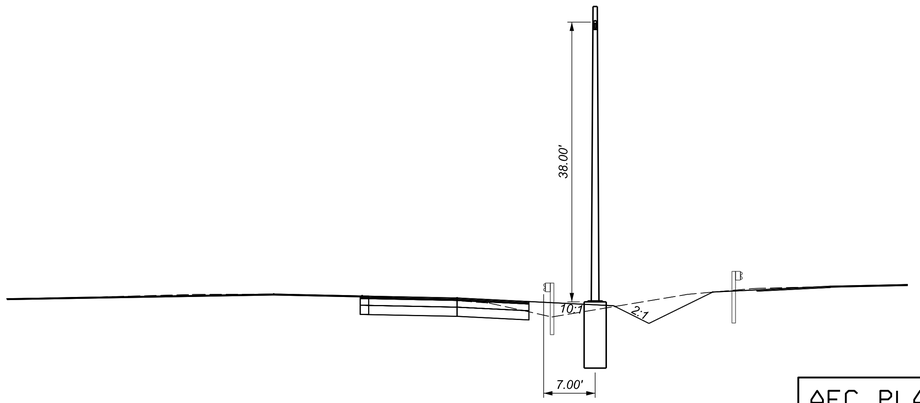

AFC PLANS

	PROJECT	SHEET NO.
	0095-076-299	I5(2G2)

Cell Revised 12/1/12

LIMITED ACCESS HIGHWAY

By Resolution of the Highway Commission dated October 4, 1956.
By Resolution of the Highway Commission dated January 18, 1973.
By Resolution of the Commonwealth Transportation Board dated April 19, 2022

PROJECT MANAGER: Rimpal Shah, P.E. (703) 259-2362 (NOVA District)
SURVEYED BY, DATE: H&B Surveying and Mapping, LLC (804) 330-3781, 03/09/2021
DESIGN BY: Whitman, Requardt, & Associates, LLP (804) 212-8700
SUBSURFACE UTILITY BY, DATE: Accumark, Inc. (804) 550-1740, 07/07/2021

COMMONWEALTH OF VIRGINIA
JEFFREY D. CHENG
Lic. No. 051900
PROFESSIONAL ENGINEER

Jeffrey D Cheng
2022.07.20 15:59:40 -04'00'

Whitman, Requardt & Associates
Baltimore, Maryland
TRAFFIC ENGINEER

REVISED	STATE	STATE ROUTE	STATE PROJECT	SHEET NO.
	VA.	95	0095-076-299,C-501	15(2G3)

DESIGN FEATURES RELATING TO CONSTRUCTION OR TO REGULATION AND CONTROL OF TRAFFIC MAY BE SUBJECT TO CHANGE AS DEEMED NECESSARY BY THE DEPARTMENT

AID POLE
STA. 692+75, XPL CONST. ℄

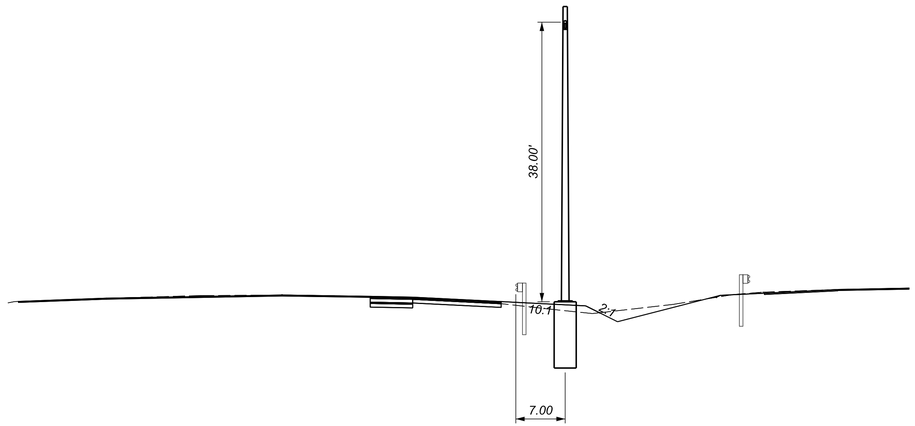

C095HLI566D
STA. 694+20, XPL CONST. ℄

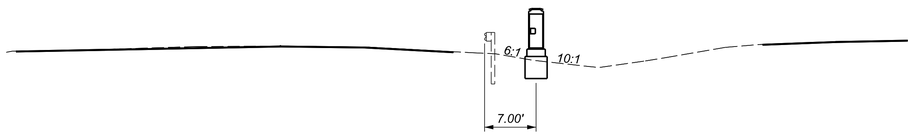

AID POLE & C095HLI566A
STA. 697+32, XPL CONST. ℄

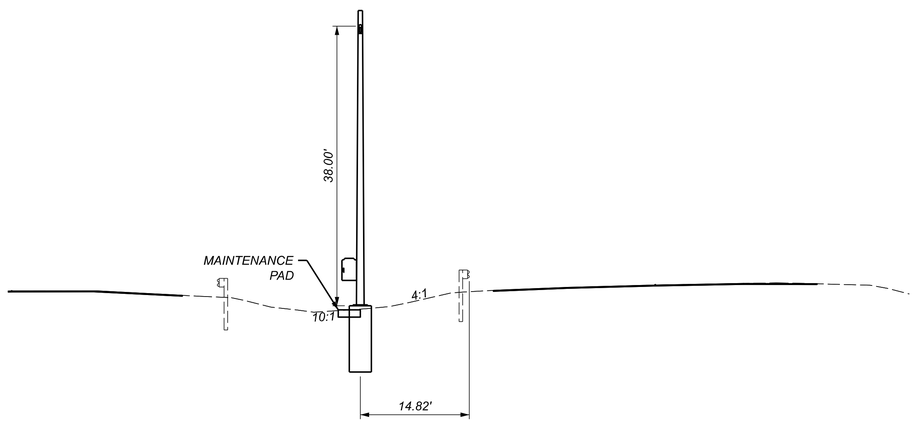

C095HLI572D
STA. 724+25, XPL CONST. ℄

AFC PLANS

	PROJECT	SHEET NO.
	0095-076-299	15(2G3)

7/18/2022 4589300101S(02G4).dgn
10:54:45 AM Plotted By: sswearman

LIMITED ACCESS HIGHWAY

By Resolution of the Highway Commission dated October 4, 1956.
By Resolution of the Highway Commission dated January 18, 1973.
By Resolution of the Commonwealth Transportation Board dated April 19, 2022

PROJECT MANAGER Rimpal Shah, P.E. (703) 259-2362 (NOVA District) _____
SURVEYED BY, DATE H&B Surveying and Mapping, LLC (804) 330-3781, 03/09/2021
DESIGN BY Whitman, Requardt, & Associates, LLP (804) 212-8700 _____.
SUBSURFACE UTILITY BY, DATE Accumark, Inc. (804) 550-7740, 07/07/2021

COMMONWEALTH OF VIRGINIA
JEFFREY D. CHENG
Lic. No. 051900
PROFESSIONAL ENGINEER

Jeffrey D Cheng
2022.07.20 16:00:03 -04'00'

Whitman, Requardt & Associates
Baltimore, Maryland
TRAFFIC ENGINEER

REVISED	STATE	STATE ROUTE	STATE PROJECT	SHEET NO.
	VA.	95	0095-076-299,C-501	15(2G4)

DESIGN FEATURES RELATING TO CONSTRUCTION OR TO REGULATION AND CONTROL OF TRAFFIC MAY BE SUBJECT TO CHANGE AS DEEMED NECESSARY BY THE DEPARTMENT

NRO-CAB-195-N-01572
STA. 726+43, XPL CONST. ℄

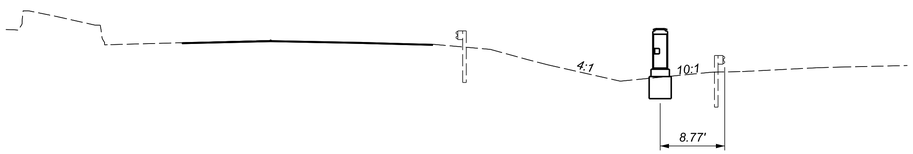

CCTV & MVD POLE & C095HR1572C
STA. 726+81, XPL CONST. ℄

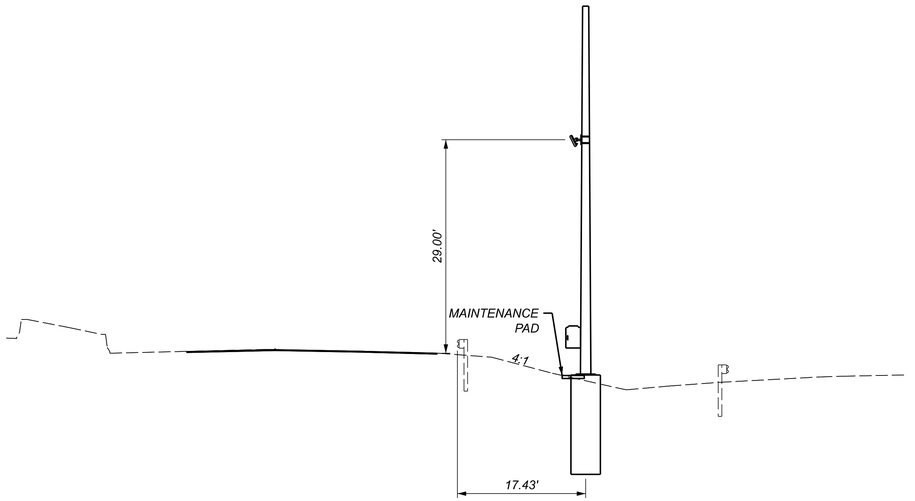

MVD POLE & NRO-CAB-195-S-01572
STA. 727+13, XPL CONST. ℄

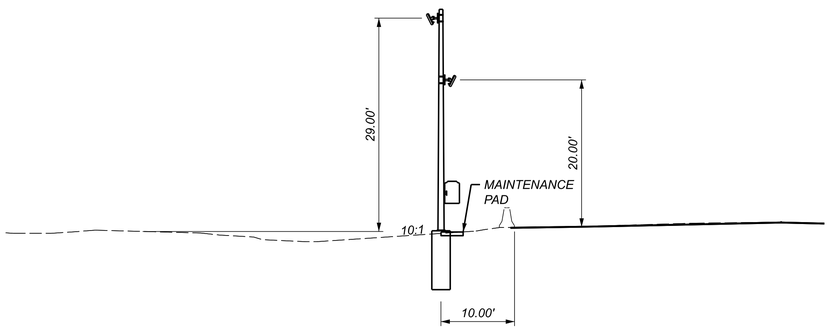

C095NRI573D
STA. 728+74, XPL CONST. ℄

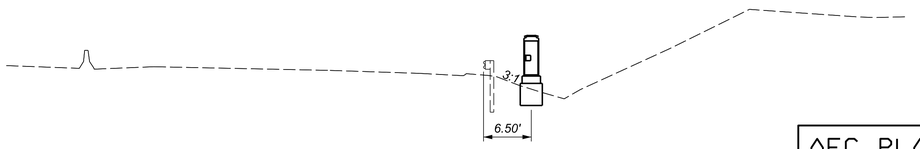

AFC PLANS

PROJECT	SHEET NO.
0095-076-299	15(2G4)

Cell Revised 12/11/12

7/18/2022 4589300101S(0265).dgn
11:00:26 AM Plotted By: sswearman

LIMITED ACCESS HIGHWAY By Resolution of the Highway Commission dated October 4, 1956.
By Resolution of the Highway Commission dated January 18, 1973.
By Resolution of the Commonwealth Transportation Board dated April 19, 2022

PROJECT MANAGER Rimpal Shah, P.E. (703) 259-2362 (NOVA District) _____
SURVEYED BY, DATE H&B Surveying and Mapping, LLC (804) 330-3781, 03/09/2021
DESIGN BY Whitman, Requardt, & Associates, LLP (804) 212-8700 _____.
SUBSURFACE UTILITY BY, DATE Accumark, Inc. (804) 550-7740, 07/07/2021

COMMONWEALTH OF VIRGINIA
JEFFREY D. CHENG
Lic. No. 051900
PROFESSIONAL ENGINEER

Jeffrey D Cheng
2022.07.20 16:00:41 -04'00'

Whitman, Requardt & Associates
Baltimore, Maryland
TRAFFIC ENGINEER

REVISED	STATE	STATE ROUTE	STATE PROJECT	SHEET NO.
	VA.	95	0095-076-299,C-501	15(265)

DESIGN FEATURES RELATING TO CONSTRUCTION OR TO REGULATION AND CONTROL OF TRAFFIC MAY BE SUBJECT TO CHANGE AS DEEMED NECESSARY BY THE DEPARTMENT

C095HLI574A
STA.732+03, XPL CONST.℄

FIXED CCTV POLE
STA.62+00, OPITZ CONST.℄

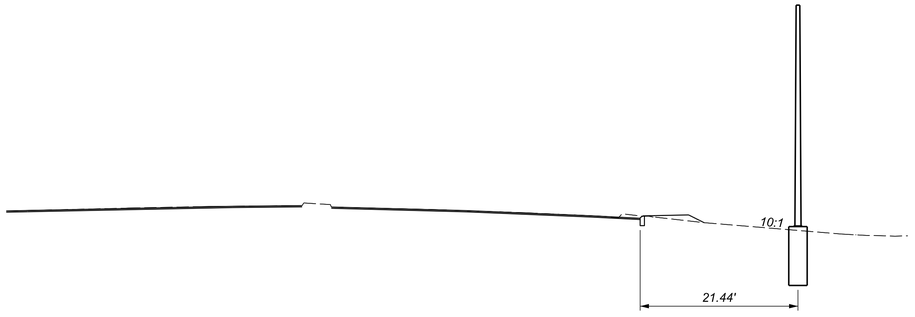

C2000ER000ID
STA.62+10, OPITZ CONST.℄

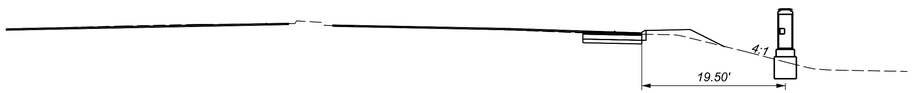

AID & CCTV POLE
STA.63+25, OPITZ CONST.℄

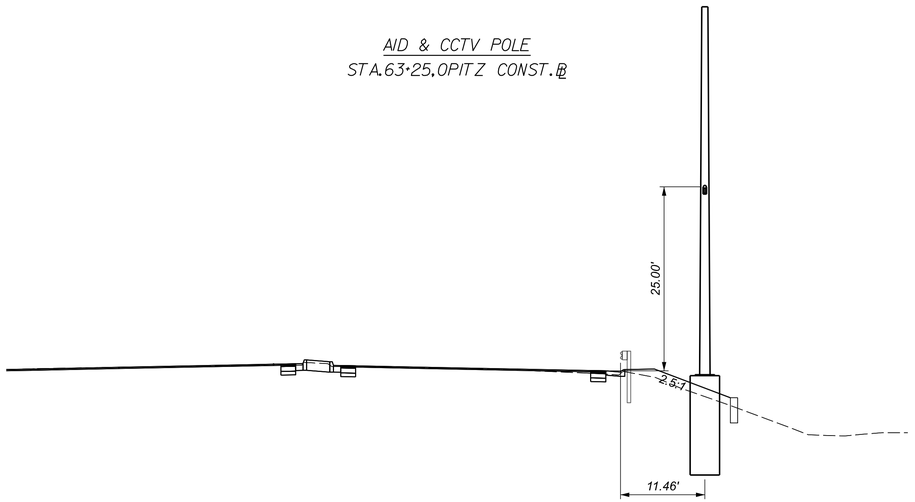

AFC PLANS

PROJECT	SHEET NO.
0095-076-299	15(265)

Cell Revised 12/11/12

7/18/2022 4589300101S(0266).dgn
11:07:31 AM Plotted By: sswearman

LIMITED ACCESS HIGHWAY

By Resolution of the Highway Commission dated October 4, 1956.
By Resolution of the Highway Commission dated January 18, 1973.
By Resolution of the Commonwealth Transportation Board dated April 19, 2022

PROJECT MANAGER Rimpal Shah, P.E. (703) 259-2362 (NOVA District) _____
SURVEYED BY, DATE H&B Surveying and Mapping, LLC (804) 330-3781, 03/09/2021
DESIGN BY Whitman, Requardt, & Associates, LLP (804) 212-8700 _____.
SUBSURFACE UTILITY BY, DATE Accumark, Inc. (804) 550-7740, 07/07/2021

COMMONWEALTH OF VIRGINIA
JEFFREY D. CHENG
Lic. No. 051900
PROFESSIONAL ENGINEER

Jeffrey D Cheng
2022.07.20 16:01:02 -04'00'

Whitman, Requardt & Associates
Baltimore, Maryland
TRAFFIC ENGINEER

REVISED	STATE	STATE ROUTE	STATE PROJECT	SHEET NO.
	VA.	95	0095-076-299,C-501	15(2G6)

DESIGN FEATURES RELATING TO CONSTRUCTION OR TO REGULATION AND CONTROL OF TRAFFIC MAY BE SUBJECT TO CHANGE AS DEEMED NECESSARY BY THE DEPARTMENT

C2000ER000IG
STA.63+50.0PITZ CONST.℄

C2000WR000ID
STA.71+22.0PITZ CONST.℄

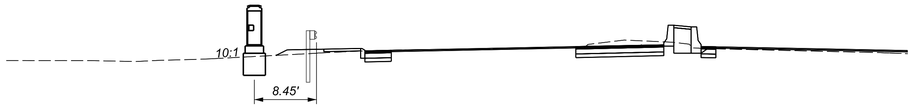

C2000ER000IC
STA.73+65.0PITZ CONST.℄

AFC PLANS

	PROJECT	SHEET NO.
	0095-076-299	15(2G6)

7/20/2022 4589300101S(03).dgn
3:34:13 PM Plotted By: kfisher

LIMITED ACCESS HIGHWAY By Resolution of the Highway Commission dated October 4, 1956
By Resolution of the Highway Commission dated January 18, 1973
By Resolution of the Commonwealth Transportation Board dated April 19, 2022

PROJECT MANAGER Rimpal Shah, P.E. (703) 259-2362 (NOVA District) _____
SURVEYED BY, DATE H&B Surveying and Mapping, LLC (804) 330-3781, 03/09/2021
DESIGN BY Whitman, Requardt, & Associates, LLP (804) 212-8700 _____
SUBSURFACE UTILITY BY, DATE Accumark, Inc. (804) 550-7740, 07/07/2021

REVISED	STATE	STATE ROUTE	STATE PROJECT	SHEET NO.
	VA.	95	0095-076-299,C-501	15(3)

COMMONWEALTH OF VIRGINIA
JEFFREY D. CHENG
Lic. No. 051900
PROFESSIONAL ENGINEER

Jeffrey D Cheng
2022.07.20 16:52:39 -04'00'

Whitman, Requardt & Associates
Baltimore, Maryland
TRAFFIC ENGINEER

DESIGN FEATURES RELATING TO CONSTRUCTION OR TO REGULATION AND CONTROL OF TRAFFIC MAY BE SUBJECT TO CHANGE AS DEEMED NECESSARY BY THE DEPARTMENT

NOTES:
1. CABINETS CONNECTED TO HI19 AT THE FOLLOWING LOCATIONS ARE NOT SHOWN ON THE PLANS SINCE THEY ARE LOCATED OUTSIDE THE LIMITS OF CONSTRUCTION: MILEMARKER 155J, MILEMARKER 155.2, MILEMARKER 155.3, MILEMARKER 155.5, AND MILEMARKER 155.6

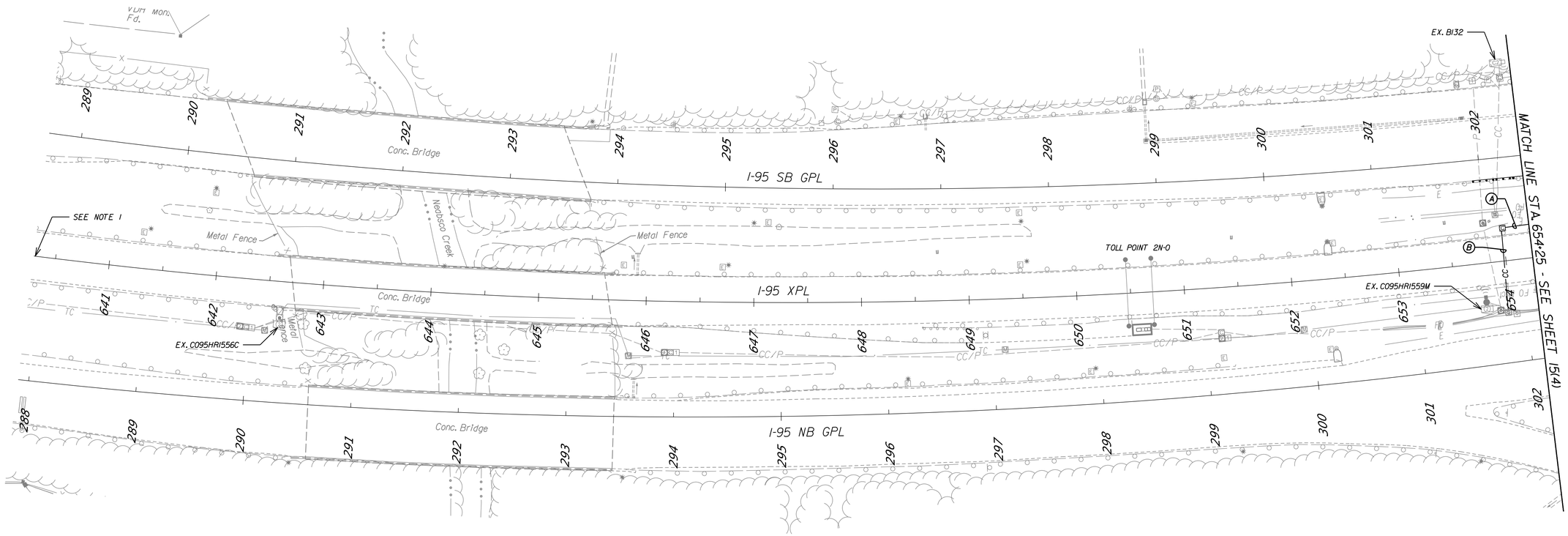

AFC PLANS

SCALE 0 50' 100'

PROJECT	SHEET NO.
0095-076-299	15(3)

Cell Revised 12/11/12

7/20/2022 4589300101S(04).dgn
3:34:32 PM Plotted By: kfisher

LIMITED ACCESS HIGHWAY

By Resolution of the Highway Commission dated October 4, 1956.
By Resolution of the Highway Commission dated January 18, 1973.
By Resolution of the Commonwealth Transportation Board dated April 19, 2022

PROJECT MANAGER Rimpal Shah, P.E. (703) 259-2362 (NOVA District)
SURVEYED BY, DATE H&B Surveying and Mapping, LLC (804) 330-3781, 03/09/2021
DESIGN BY Whitman, Requardt, & Associates, LLP (804) 212-8700
SUBSURFACE UTILITY BY, DATE Accumark, Inc. (804) 550-7740, 07/07/2021

COMMONWEALTH OF VIRGINIA
JEFFREY D. CHENG
Lic. No. 051900
PROFESSIONAL ENGINEER

Jeffrey D Cheng
2022.07.20 16:53:08 -04'00'

Whitman, Requardt & Associates
Baltimore, Maryland
TRAFFIC ENGINEER

REVISED	STATE	STATE ROUTE	STATE PROJECT	SHEET NO.
	VA.	95	0095-076-299,C-501	15(4)

DESIGN FEATURES RELATING TO CONSTRUCTION OR TO REGULATION AND CONTROL OF TRAFFIC MAY BE SUBJECT TO CHANGE AS DEEMED NECESSARY BY THE DEPARTMENT

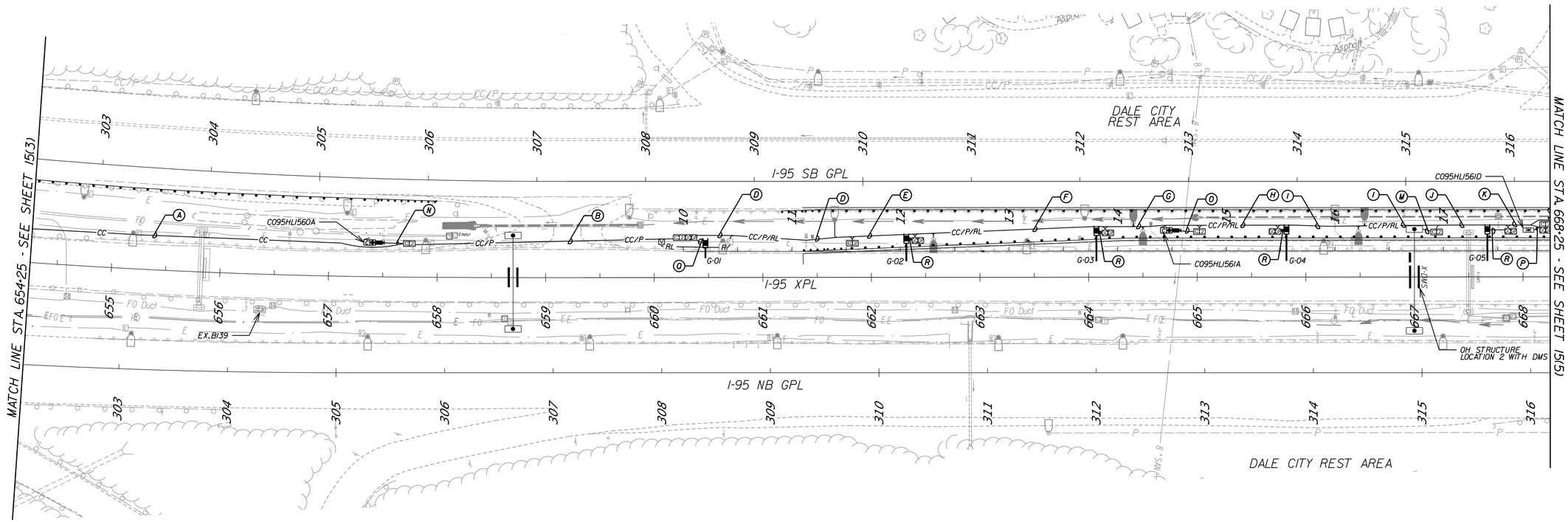

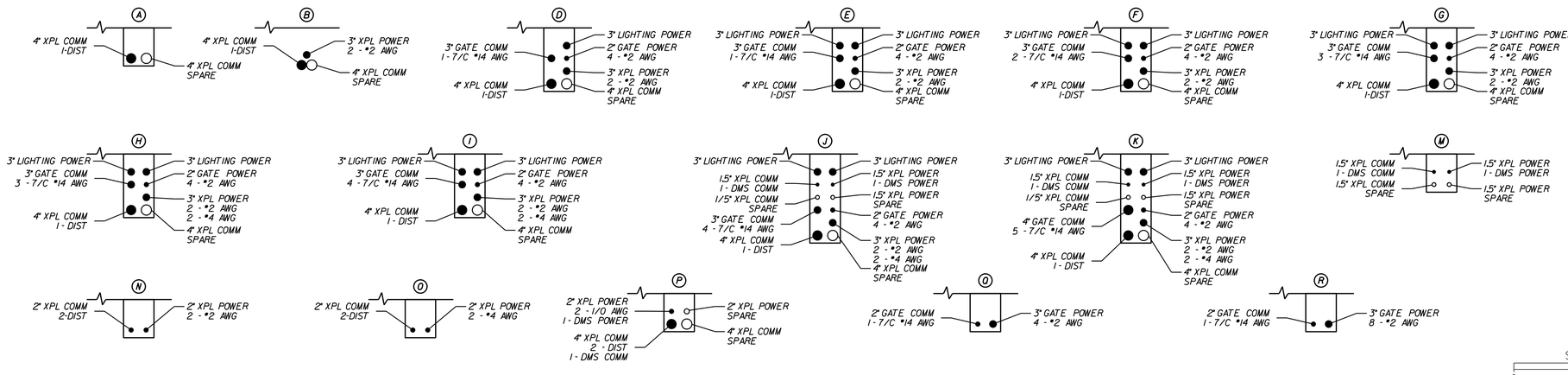

AFC PLANS

SCALE
0 50' 100'

PROJECT	SHEET NO.
0095-076-299	15(4)

Cell Revised 12/1/12

LIMITED ACCESS HIGHWAY

By Resolution of the Highway Commission dated October 4, 1956.
By Resolution of the Highway Commission dated January 18, 1973.
By Resolution of the Commonwealth Transportation Board dated April 19, 2022

PROJECT MANAGER Rimpal Shah, P.E. (703) 259-2362 (NOVA District)
SURVEYED BY, DATE H&B Surveying and Mapping, LLC (804) 330-3781, 03/09/2021
DESIGN BY Whitman, Requardt, & Associates, LLP (804) 212-8700
SUBSURFACE UTILITY BY, DATE Accumark Inc. (804) 550-1740, 07/07/2021

COMMONWEALTH OF VIRGINIA
JEFFREY D. CHENG
Lic. No. 051900
PROFESSIONAL ENGINEER

Jeffrey D Cheng
2022.07.20 16:53:29 -04'00'

Whitman, Requardt & Associates
Baltimore, Maryland
TRAFFIC ENGINEER

REVISED	STATE	STATE ROUTE	STATE PROJECT	SHEET NO.
	VA.	95	0095-076-299,C-501	15(5)

DESIGN FEATURES RELATING TO CONSTRUCTION OR TO REGULATION AND CONTROL OF TRAFFIC MAY BE SUBJECT TO CHANGE AS DEEMED NECESSARY BY THE DEPARTMENT

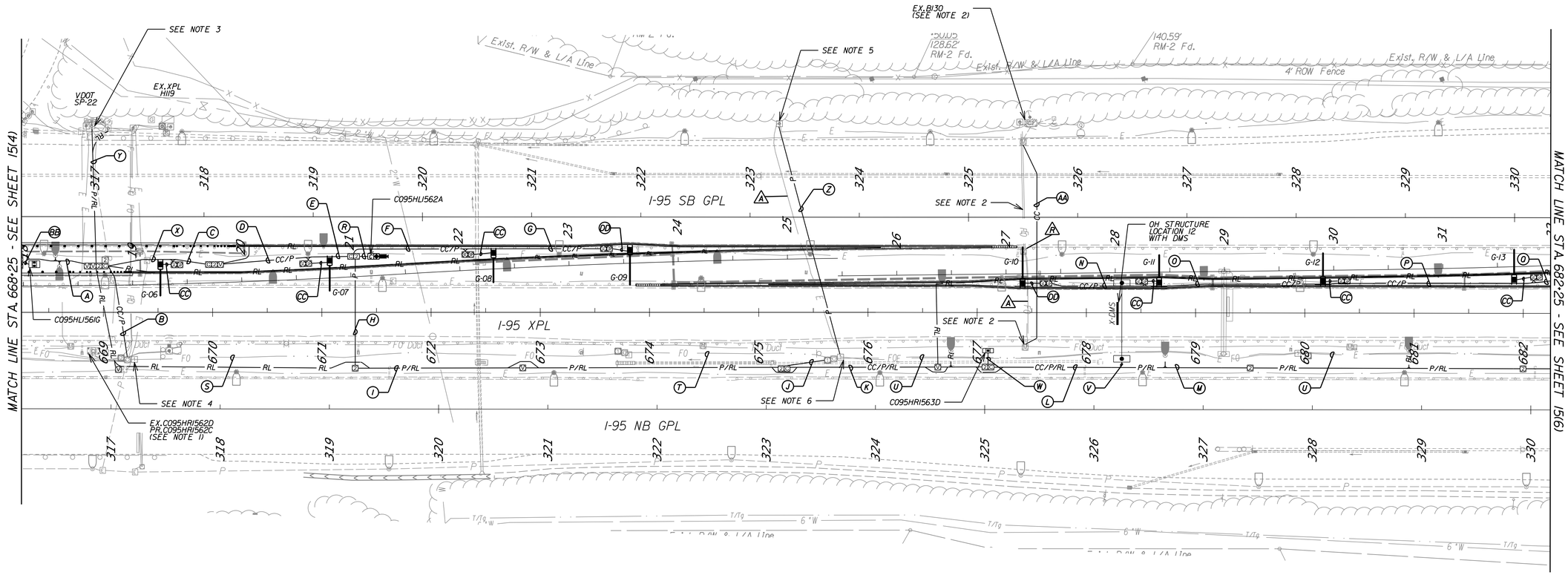

AFC PLANS

NOTES:

1. EXISTING CABINET TO REMAIN FOR MVD AND CCTV CONTROL. REMOVE AND SALVAGE EXISTING DMS CONTROLS FROM CABINET AND RETURN TO 95 EXPRESS.
2. DISCONNECT EX. FIBER OPTIC CABLES IN EXISTING CABINET AND PULL BACK TO EX. VDOT MANHOLE LOCATED AT STA. 677+45. RE-FEED EXISTING CABLES THROUGH PROPOSED AND EXISTING CONDUITS AND RECONNECT IN EXISTING CABINET.
3. TERMINATE THE PROPOSED CONDUITS FOR VDOT POWER INTO THE EXISTING JUNCTION BOX FOR VDOT POWER. REMOVE THE EXISTING CABLES BETWEEN THE EXISTING JUNCTION BOX AND THE EXISTING SERVICE PANEL. FEED PROPOSED CABLES THROUGH THE EXISTING CONDUIT AND CONNECT TO THE EXSISTING CIRCUIT BREAKERS FOR EXISTING CIRCUITS FOR EX.136 AND EX.BI32/BI41R IN THE EXISTING VDOT SERVICE PANEL SP-22.
4. TERMINATE THE PROPOSED CONDUIT FOR VDOT POWER INTO THE EXISTING JUNCTION BOX FOR VDOT POWER. SPLICE THE EXISTING CONDUCTORS IN THE CONDUIT THAT RUNS SOUTH TOWARDS EX.BI32 TO THE PROPOSED CONDUCTORS IN THE PROPOSED CONDUIT CROSSING I-95.
5. SPLICE THE EXISTING CONDUCTORS IN THE CONDUIT THAT RUNS NORTH TOWARDS EX.BI30 TO THE PROPOSED CONDUCTORS IN THE PROPOSED CONDUIT CROSSING I-95.
6. SPLICE THE EXISTING CONDUCTORS IN THE CONDUIT THAT RUNS NORTH TOWARDS SP-2I TO THE PROPOSED CONDUCTORS IN THE PROPOSED CONDUIT CROSSING I-95.
7. THE CONTRACTOR SHALL COORDINATE AND STAKE OUT THE LOCATION OF JUNCTION BOXES LOCATED WITHIN THE PROPOSED CONCRETE MEDIAN CAP AND ENSURE THAT THEY DO NOT CONFLICT WITH GATE MAINTENANCE AREAS OR OTHER FEATURES.

SCALE
0 50' 100'

PROJECT	SHEET NO.
0095-076-299	15(5)

7/20/2022 4589300101505A1.dgn
3:34:55 PM Plotted By: kfisher

LIMITED ACCESS HIGHWAY

By Resolution of the Highway Commission dated October 4, 1956.
By Resolution of the Highway Commission dated January 18, 1973.
By Resolution of the Commonwealth Transportation Board dated April 19, 2022

PROJECT MANAGER Rimpal Shah, P.E. (703) 259-2362 (NOVA District) _____
SURVEYED BY, DATE B&B Surveying and Mapping, LLC (804) 330-3781, 03/09/2021
DESIGN BY Whitman, Requardt & Associates, LLP (804) 212-8700 _____.
SUBSURFACE UTILITY BY, DATE Accutrak Inc. (804) 550-7740, 07/07/2021

COMMONWEALTH OF VIRGINIA
JEFFREY D. CHENG
Lic. No. 051900
PROFESSIONAL ENGINEER

Jeffrey D Cheng
2022.07.20 16:53:51 -04'00'

Whitman, Requardt & Associates
Baltimore, Maryland
TRAFFIC ENGINEER

REVISED	STATE	STATE ROUTE	STATE PROJECT	SHEET NO.
	VA.	95	0095-076-299,C-501	15(5A)

DESIGN FEATURES RELATING TO CONSTRUCTION OR TO REGULATION AND CONTROL OF TRAFFIC MAY BE SUBJECT TO CHANGE AS DEEMED NECESSARY BY THE DEPARTMENT

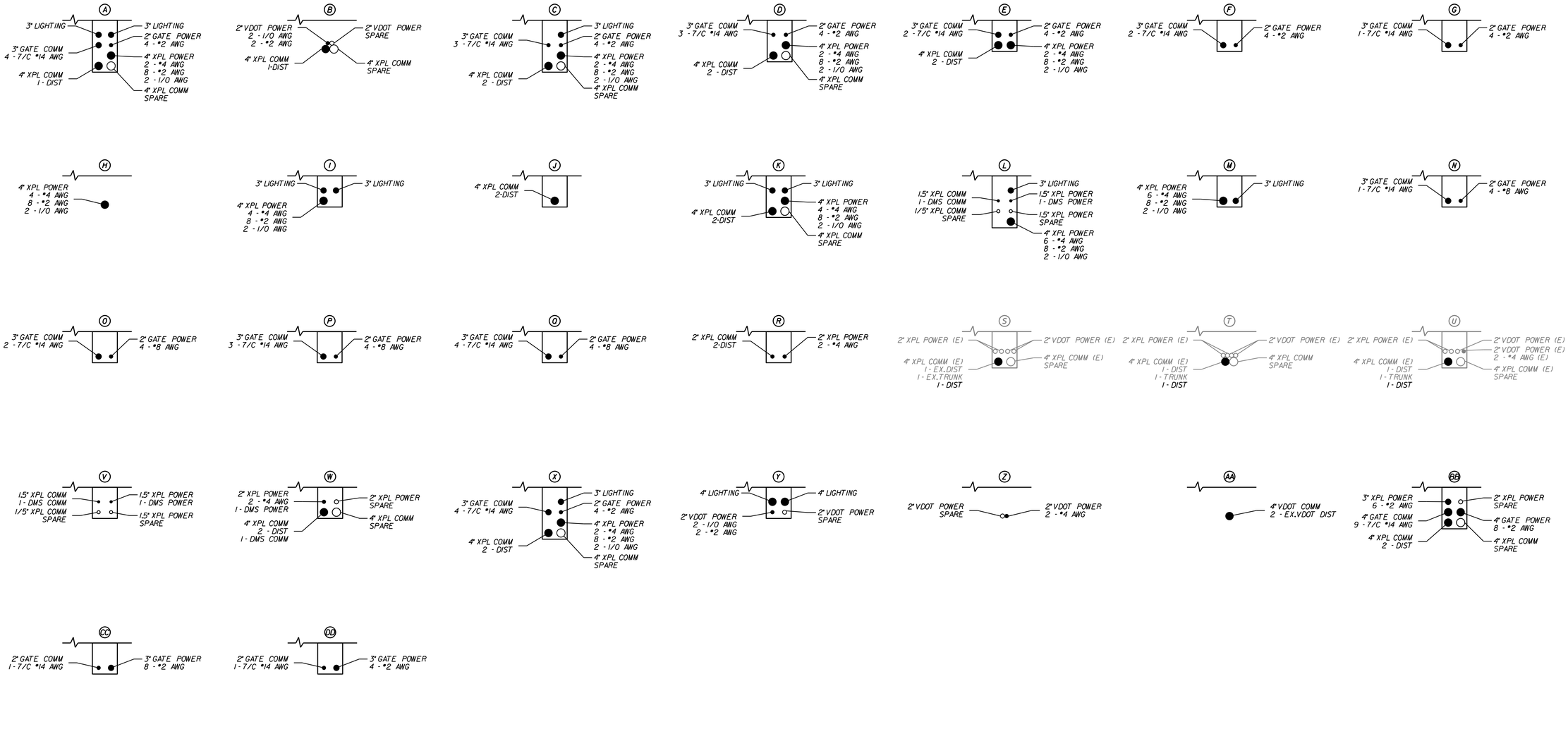

AFC PLANS

	PROJECT	SHEET NO.
	0095-076-299	15(5A)

Cell Revised 12/11/12

LIMITED ACCESS HIGHWAY

By Resolution of the Highway Commission dated October 4, 1956
By Resolution of the Highway Commission dated January 18, 1973
By Resolution of the Commonwealth Transportation Board dated April 19, 2022

PROJECT MANAGER Rimpal Shah, P.E. (703) 259-2362 (NOVA District) _____
SURVEYED BY, DATE H&B Surveying and Mapping, LLC (804) 330-3781, 03/09/2021
DESIGN BY Whitman, Requardt & Associates, LLP (804) 212-8700 _____
SUBSURFACE UTILITY BY, DATE Accumark, Inc. (804) 550-7740, 07/07/2021

COMMONWEALTH OF VIRGINIA
JEFFREY D. CHENG
Lic. No. 051900
PROFESSIONAL ENGINEER

Jeffrey D Cheng
2022.07.20 16:54:15 -04'00'

Whitman, Requardt & Associates
Baltimore, Maryland
TRAFFIC ENGINEER

REVISED	STATE	STATE ROUTE	STATE PROJECT	SHEET NO.
	VA.	95	0095-076-299,C-501	15(6)

DESIGN FEATURES RELATING TO CONSTRUCTION OR TO REGULATION AND CONTROL OF TRAFFIC MAY BE SUBJECT TO CHANGE AS DEEMED NECESSARY BY THE DEPARTMENT

NOTES:

1. THE CONTRACTOR SHALL COORDINATE AND STAKE OUT THE LOCATION OF JUNCTION BOXES LOCATED WITHIN THE PROPOSED CONCRETE MEDIAN CAP AND ENSURE THAT THEY DO NOT CONFLICT WITH GATE MAINTENANCE AREAS OR OTHER FEATURES.

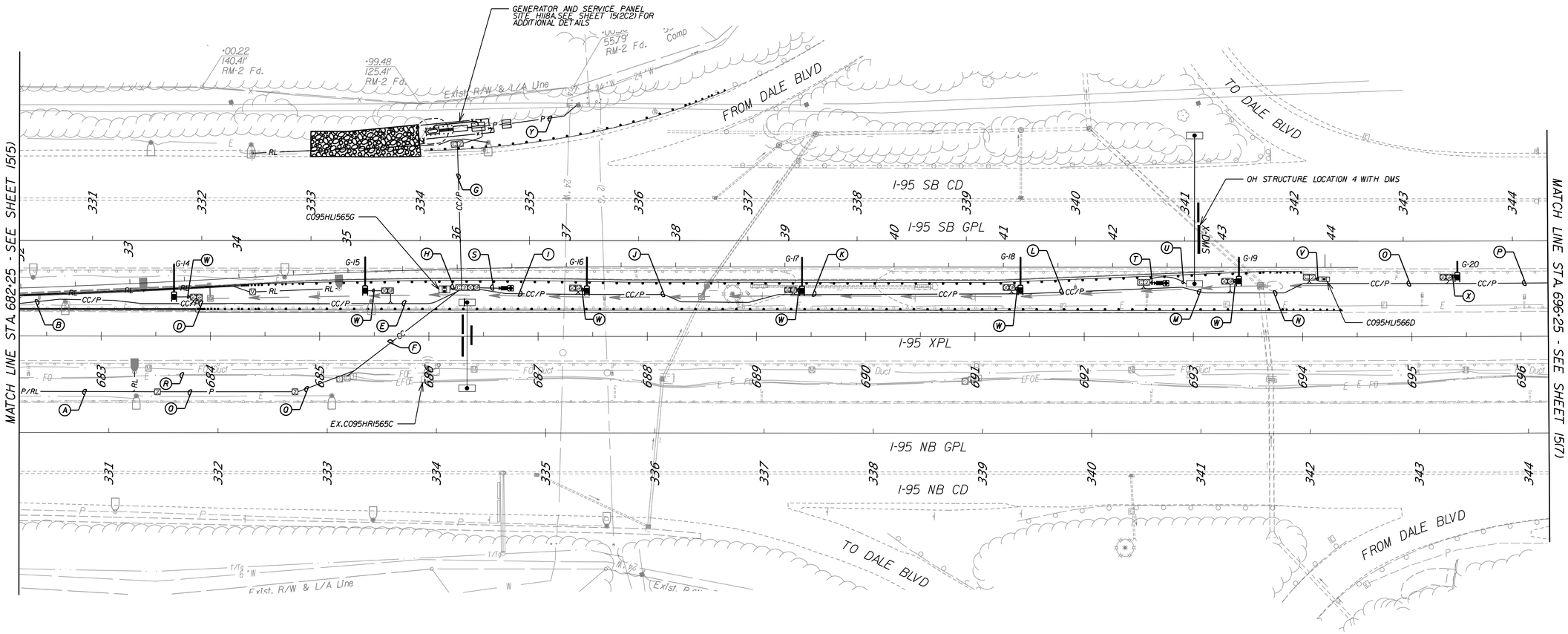

AFC PLANS

SCALE
0 50' 100'

PROJECT	SHEET NO.
0095-076-299	15(6)

7/20/2022 4589300101S106A1.dgn
3:35:38 PM Plotted By: kfisher

LIMITED ACCESS HIGHWAY By Resolution of the Highway Commission dated October 4, 1956.
By Resolution of the Highway Commission dated January 18, 1973.
By Resolution of the Commonwealth Transportation Board dated April 19, 2022

PROJECT MANAGER Rimpal Shah, P.E. (703) 259-2362 (NOVA District) _____
SURVEYED BY, DATE B&B Surveying and Mapping, LLC (804) 330-3781, 03/09/2021
DESIGN BY Whitman, Requardt, & Associates, LLP (804) 212-8700 _____.
SUBSURFACE UTILITY BY, DATE Accumark, Inc. (804) 550-7740, 07/07/2021

COMMONWEALTH OF VIRGINIA
JEFFREY D. CHENG
Lic. No. 051900
PROFESSIONAL ENGINEER

Jeffrey D Cheng
2022.07.20 16:54:34 -04'00'

Whitman, Requardt & Associates
Baltimore, Maryland
TRAFFIC ENGINEER

REVISED	STATE	STATE ROUTE	STATE PROJECT	SHEET NO.
	VA.	95	0095-076-299,C-501	15(6A)

DESIGN FEATURES RELATING TO CONSTRUCTION OR TO REGULATION AND CONTROL OF TRAFFIC MAY BE SUBJECT TO CHANGE AS DEEMED NECESSARY BY THE DEPARTMENT

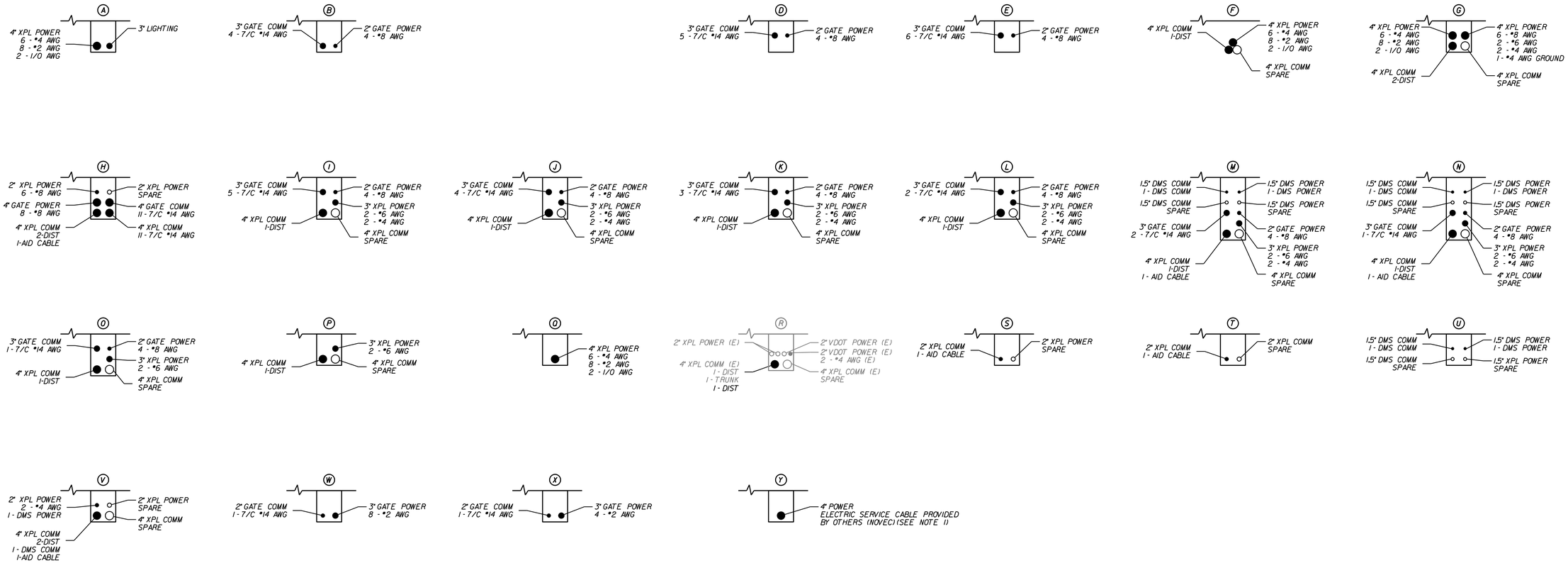

NOTES:
1. CONDUIT SWEEPS FOR CONDUITS DISTINGUISHED FOR USE BY NOVEC SHALL HAVE A 3 FOOT MINIMUM RADIUS SWEEP.

AFC PLANS

	PROJECT	SHEET NO.
	0095-076-299	15(6A)

Cell Revised 12/11/12

7/20/2022 4589300101S(07).dgn
3:36:19 PM Plotted By: kfisher

LIMITED ACCESS HIGHWAY

By Resolution of the Highway Commission dated October 4, 1956.
By Resolution of the Highway Commission dated January 18, 1973.
By Resolution of the Commonwealth Transportation Board dated April 19, 2022

PROJECT MANAGER Rimpal Shah, P.E. (703) 259-2362 (NOVA District) _____
SURVEYED BY, DATE H&B Surveying and Mapping, LLC (804) 330-3781, 03/09/2021
DESIGN BY Whitman, Requardt, & Associates, LLP (804) 212-8700 _____
SUBSURFACE UTILITY BY, DATE Accutark, Inc. (804) 550-7740, 07/07/2021

COMMONWEALTH OF VIRGINIA
JEFFREY D. CHENG
Lic. No. 051900
PROFESSIONAL ENGINEER

Jeffrey D Cheng
2022.07.20 16:54:57 -04'00'

Whitman, Requardt & Associates
Baltimore, Maryland
TRAFFIC ENGINEER

REVISED	STATE	STATE ROUTE	STATE PROJECT	SHEET NO.
	VA.	95	0095-076-299,C-501	15(7)

DESIGN FEATURES RELATING TO CONSTRUCTION OR TO REGULATION AND CONTROL OF TRAFFIC MAY BE SUBJECT TO CHANGE AS DEEMED NECESSARY BY THE DEPARTMENT

NOTES:
1. REMOVE EXISTING GATE COMMUNICATIONS AND GATE POWER CABLES AND ABANDON ASSOCIATED CONDUITS ONLY. OTHER EXISTING TMS POWER AND COMMUNICATIONS CABLES AND CONDUITS TO REMAIN.

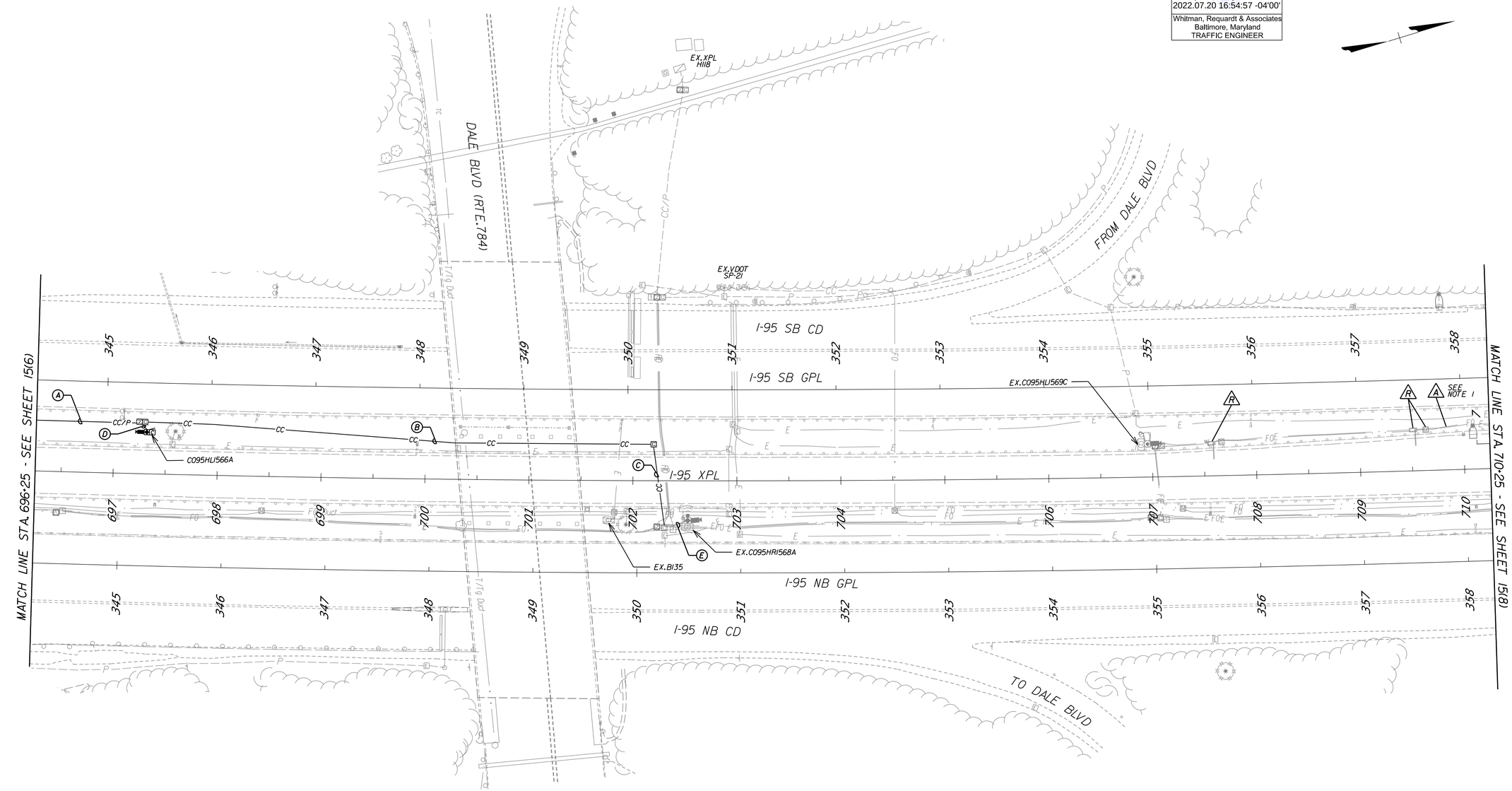

A — 4" XPL COMM I-DIST; 3" XPL POWER 2 - #6 AWG; 4" XPL COMM SPARE

B — 4" XPL COMM I-DIST; 4" XPL COMM SPARE

C — 4" XPL COMM I-DIST; 4" XPL COMM SPARE

D — 2" XPL COMM 2-DIST; 2" XPL POWER 2 - #6 AWG

E — 4" XPL COMM (E) 2 - EX. DIST 1 - DIST; 2" XPL POWER (E) 2 - #8 AWG

AFC PLANS

SCALE 0 50' 100'

PROJECT	SHEET NO.
0095-076-299	15(7)

Cell Revised 12/11/12

7/20/2022 4589300101S(08).dgn
3:36:38 PM Plotted By: kfisher

LIMITED ACCESS HIGHWAY By Resolution of the Highway Commission dated October 4, 1956.
By Resolution of the Highway Commission dated January 18, 1973.
By Resolution of the Commonwealth Transportation Board dated April 19, 2022

PROJECT MANAGER Rimpal Shah, P.E. (703) 259-2362 (NOVA District) _____
SURVEYED BY, DATE H&B Surveying and Mapping, LLC (804) 330-3781, 03/09/2021
DESIGN BY Whitman, Requardt, & Associates, LLP (804) 212-8700 _____
SUBSURFACE UTILITY BY, DATE Accumark, Inc. (804) 550-7740, 07/07/2021

COMMONWEALTH OF VIRGINIA
JEFFREY D. CHENG
Lic. No. 051900
PROFESSIONAL ENGINEER

Jeffrey D Cheng
2022.07.20 16:55:23 -04'00'

Whitman, Requardt & Associates
Baltimore, Maryland
TRAFFIC ENGINEER

REVISED	STATE	STATE ROUTE	STATE PROJECT	SHEET NO.
	VA.	95	0095-076-299,C-501	15(8)

DESIGN FEATURES RELATING TO CONSTRUCTION OR TO REGULATION AND CONTROL OF TRAFFIC MAY BE SUBJECT TO CHANGE AS DEEMED NECESSARY BY THE DEPARTMENT

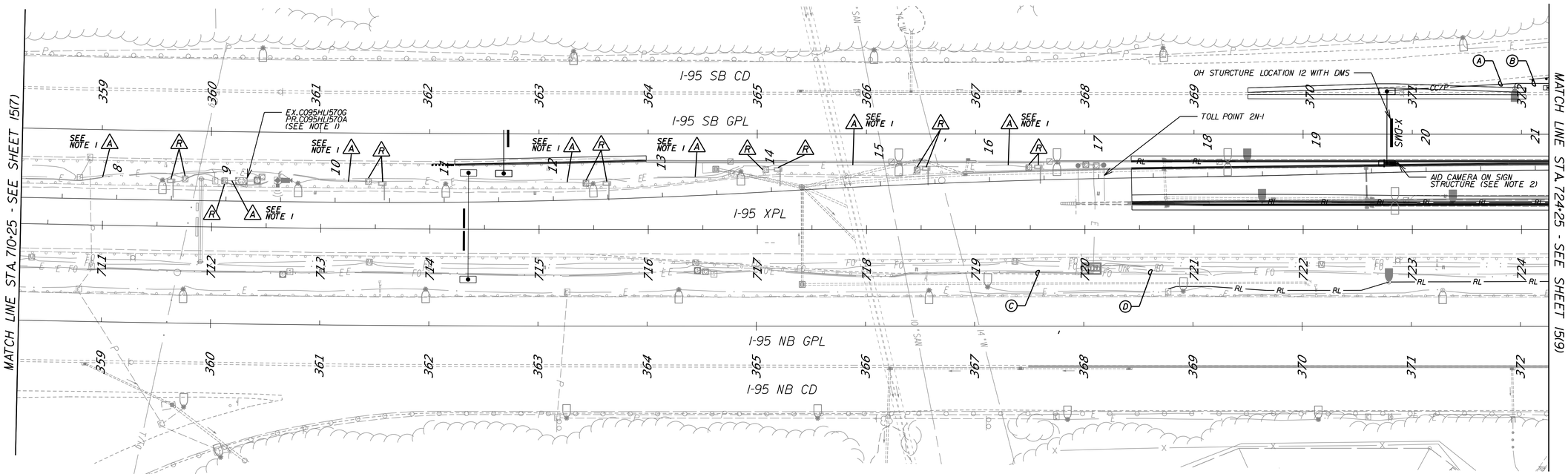

(A)
1.5" XPL COMM
1 - DMS COMM
1 - AID CABLE
1.5" XPL COMM SPARE
1.5" XPL POWER
1 - DMS POWER
1.5" XPL POWER SPARE

(B)
1.5" XPL COMM
1 - DMS COMM
1.5" XPL COMM
1 - AID CABLE
3" LIGHTING
1.5" XPL POWER
1 - DMS POWER
1.5" XPL POWER SPARE

(C)
2" XPL POWER (E)
2" XPL POWER (E)
4 - 1/0 AWG
2 - #4 AWG
4" XPL COMM (E)
1 - DIST
1 - TRUNK
1 - DIST
2" VDOT POWER (E)
2" VDOT POWER (E)
2 - 1/0 AWG (E)
4" XPL COMM (E) SPARE

(D)
2" XPL POWER (E)
2" XPL POWER (E)
2 - 1/0 AWG
2 - #4 AWG
4" XPL COMM (E)
1 - DIST
1 - TRUNK
1 - DIST
2" VDOT POWER (E)
2" VDOT POWER (E)
2 - 1/0 AWG (E)
4" XPL COMM (E) SPARE

NOTES:

1. EXISTING CABINET TO REMAIN FOR AID AND MVD CONTROL. REMOVE AND SALVAGE EXISTING GATE CONTROL EQUIPMENT FROM CABINET AND RETURN TO TRANSURBAN.
2. INSTALL AID CAMERA ON PROPOSED SIGN STRUCTURE FOLLOWING MOUNTING DETAILS ON SHEET 15(2A2). UTILIZE THE DMS COMMUNICATIONS CONDUIT FOR THE AID CABLE BY CONTINUING THE DMS COMMUNICATIONS CONDUIT FROM THE DMS TO THE AID CAMERA LOCATION. TERMINATE THE CONDUIT AT THE AID WITH A WEATHERHEAD.
3.

AFC PLANS

SCALE 0 50' 100'

PROJECT	SHEET NO.
0095-076-299	15(8)

Cell Revised 12/11/12

7/20/2022 4589300101509).dgn
5:00:31 PM Plotted By: kfisher

LIMITED ACCESS HIGHWAY

By Resolution of the Highway Commission dated October 4, 1956.
By Resolution of the Highway Commission dated January 18, 1973.
By Resolution of the Commonwealth Transportation Board dated April 19, 2022

PROJECT MANAGER: Rimpal Shah, P.E. (703) 259-2362 (NOVA District)
SURVEYED BY, DATE: B&B Surveying and Mapping, LLC (804) 330-3781, 03/09/2021
DESIGN BY: Whitman, Requardt & Associates, LLP (804) 212-8700
SUBSURFACE UTILITY BY, DATE: Accutark, Inc. (804) 550-7740, 07/07/2021

NOTES:

1. REMOVE AND SALVAGE EXISTING CABINET C095HLI573G AND RETURN TO 95 EXPRESS. REMOVE EXISTING CABINET FOUNDATION.
2. REMOVE AND SALVAGE EXISTING VDOT CABINET BI31M. CABINET BI31, AND MVD AND RETURN TO VDOT. REMOVE EXISTING POLE AND CABINET FOUNDATIONS.
3. REMOVE AND SALVAGE EXISTING CABINET C095XRI573D AND RETURN TO 95 EXPRESS. REMOVE EXISTING CABINET FOUNDATION.
4. REMOVE AND SALVAGE EXISTING CABINET C095SLI575D AND RETURN TO 95 EXPRESS. REMOVE EXISTING CABINET FOUNDATION.
5. REMOVE AND SALVAGE EXISTING CCTV AND AID AND RETURN TO 95 EXPRESS. REMOVE EXISTING POLE AND FOUNDATION.
6. REMOVE AND SALVAGE EXISTING CABINET C095HLI572A AND AID AND RETURN TO 95 EXPRESS. REMOVE EXISTING POLE AND FOUNDATION.
7. REMOVE AND SALVAGE EXISTING DMS AND RETURN TO 95 EXPRESS.
8. SEE DWG. NO. 15(9B) FOR DETAILS OF CONDUIT, CABLE, AND TMS DEVICE INSTALLATION ON THE BRIDGE.
9. INSTALL PROPOSED VDOT MICROWAVE VEHICLE DETECTOR AND POLE MOUNTED CABINET ON PROPOSED 45 FOOT STEEL POLE. REFER TO SECTION 805 - VEHICLE DETECTION AND DATA COLLECTION, SECTION 801 - ITS INFRASTRUCTURE COMPONENTS, AND SECTION 803 - CCTV VIDEO EQUIPMENT OF THE VDOT ROAD AND BRIDGE SPECIFICATIONS FOR REQUIREMENTS OF THE VEHICLE DETECTOR, POLE MOUNTED CABINET, AND STEEL POLE.
10. INSTALL PROPOSED VDOT BASE MOUNTED CABINET NRO-CAB-195-N-01572 ON STD.CF-3 FOUNDATION. INSTALL PROPOSED VDOT CCTV MOUNTED AT 45 FEET ON PROPOSED TRANSURBAN 50 FOOT STEEL POLE. REFER TO SECTION 801 - ITS INFRASTRUCTURE COMPONENTS AND SECTION 803 - CCTV VIDEO EQUIPMENT OF THE VDOT ROAD AND BRIDGE SPECIFICATIONS FOR REQUIREMENTS OF THE GROUND MOUNTED CABINET AND CCTV EQUIPMENT.
11. DISCONNECT THE EX.24 CT. FIBER CABLE THAT COMES FROM THE SOUTH (ORIGINATES FROM EX.BI351) IN EX.BI31 AND PULL THE CABLE BACK TO THE VDOT MANHOLE LOCATED AT STA. 724+80. RE-FEED THE CABLE FROM THE EXISTING MANHOLE THROUGH PROPOSED CONDUITS AND JUNCTION BOXES AND TERMINATE/SPLICE THE CABLE AT PROPOSED VDOT NRO-CAB-195-N-01572.
12. DISCONNECT THE EX.24 CT. FIBER CABLE THAT COMES FROM EX.BI22 IN EX.BI31 AND PULL THE CABLE BACK TO THE VDOT MANHOLE LOCATED AT STA. 375+80. RE-FEED THE CABLE FROM THE EXISTING MANHOLE THROUGH PROPOSED CONDUIT AND TERMINATE/SPLICE THE CABLE AT PROPOSED VDOT NRO-CAB-195-S-01572.
13. SPLICE THE EXISTING CONDUCTORS IN THE CONDUIT THAT RUNS NORTH TOWARDS EX.BI22 TO THE PROPOSED CONDUCTORS IN THE PROPOSED CONDUIT CROSSING I-95.
14. TERMINATE THE PROPOSED CONDUIT FOR VDOT POWER INTO THE EXISTING JUNCTION BOX FOR VDOT POWER. SPLICE THE EXISTING CONDUCTORS IN THE CONDUIT THAT RUNS SOUTH TOWARDS EX. VDOT SERVICE PANEL SP-2I TO THE PROPOSED CONDUCTORS IN THE PROPOSED CONDUIT CROSSING I-95.
15. SPLICE THE PROPOSED CONDUCTORS IN THE CONDUIT THAT RUNS NORTH TOWARDS PR.NRO-CAB-195-S-01572 TO THE PROPOSED CONDUCTORS IN THE PROPOSED CONDUIT CROSSING I-95.
16. SEE DWG. NO. 15(9C) FOR ADDITIONAL EQUIPMENT REMOVAL AND CONDUIT ABANDONED DETAILS.
17. INSTALL CONCRETE PAD FOR 75KVA, 3 PHASE TRANSFORMER. TRANSFORMER TO BE PROVIDED BY NOVEC. REFER TO NOVEC ELECTRICIANS GUIDE STDUPI003 FOR TRANSFORMER PAD DETAILS. INSTALL (3) 3 FOOT RADIUS SWEEPS (LIGHTING, ITS, AND SPARE).
18. CONDUITS SHALL BE INSTALLED AT A DEPTH SO THAT A MINIMUM CLEARANCE OF 3 FEET IS MAINTAINED BETWEEN THE TOP OF THE CONDUIT AND THE BOTTOM OF THE WALL FOOTERS.
19. SEE SHEET 15(9C) FOR INSET VIEW OF STA. 724+50 TO STA. 730+50 AND INFORMATION ON EXISTING EQUIPMENT REMOVALS.
20. SPLICE (2) #4 AWG PROPOSED CONDUCTORS IN THE PROPOSED CONDUIT TO THE EXISTING CONDUCTORS IN THE EXISTING JUNCTION BOX THAT PROVIDE POWER TO EXISTING CABINET C095XRI574D (SHEET 15(13)). ENSURE THAT THE CONDUCTORS ARE SPLICED PROPERLY TO RESTORE POWER TO EXISTING CABINET C095XRI574D FROM EXISTING HI17.
21. REMOVE EXISTING GATE, COMMUNICATIONS, AND GATE POWER CABLES AND ABANDON ASSOCIATED CONDUITS ONLY. OTHER EXISTING TMS POWER AND COMMUNICATIONS CABLES AND CONDUITS TO REMAIN.

COMMONWEALTH OF VIRGINIA
JEFFREY D. CHENG
Lic. No. 051900
PROFESSIONAL ENGINEER

Jeffrey D Cheng
2022.07.20 17:14:59 -04'00'
Whitman, Requardt & Associates
Baltimore, Maryland
TRAFFIC ENGINEER

REVISED	STATE	STATE ROUTE	STATE PROJECT	SHEET NO.
	VA.	95	0095-076-299,C-501	15(9)

DESIGN FEATURES RELATING TO CONSTRUCTION OR TO REGULATION AND CONTROL OF TRAFFIC MAY BE SUBJECT TO CHANGE AS DEEMED NECESSARY BY THE DEPARTMENT

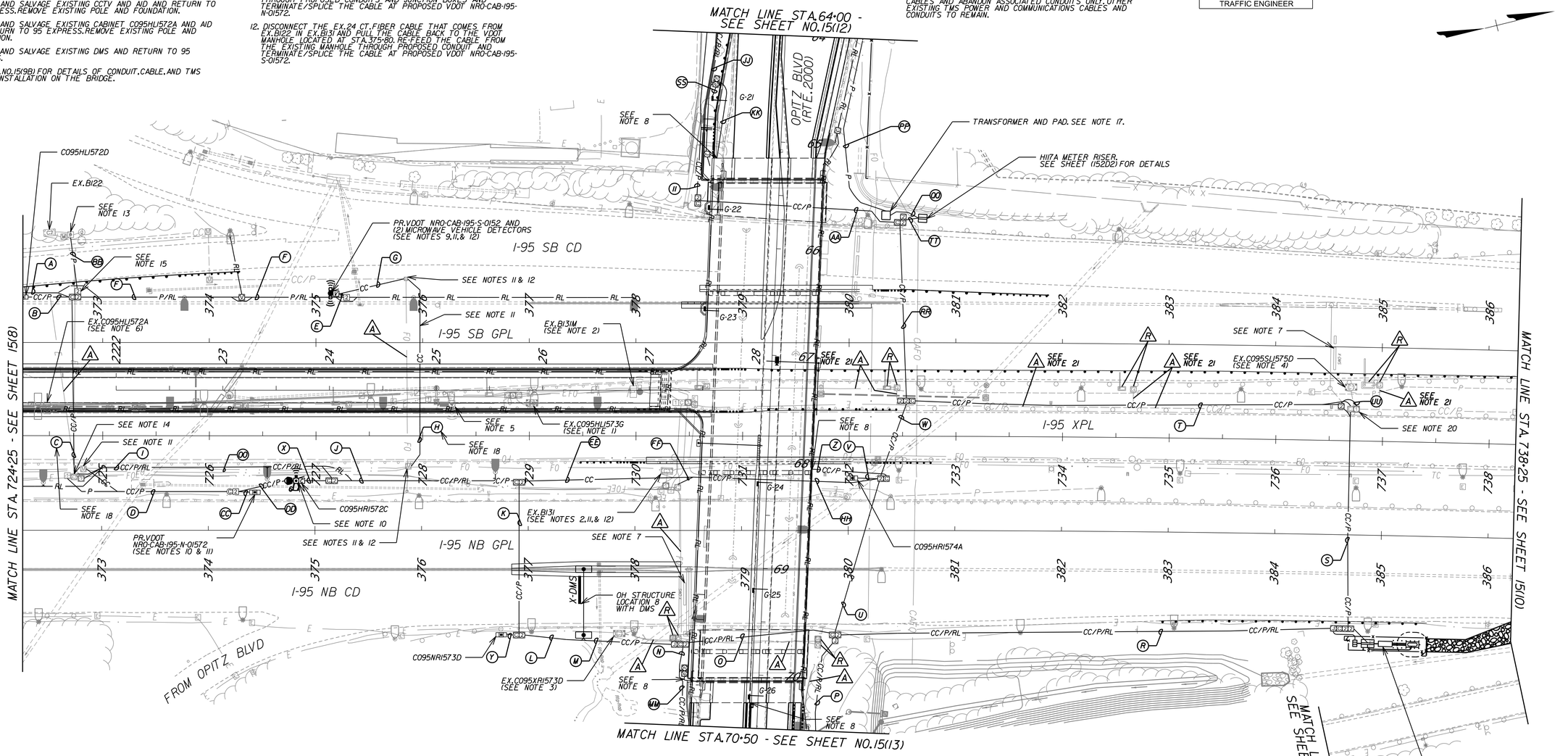

AFC PLANS

SCALE
0 50' 100'

PROJECT	SHEET NO.
0095-076-299	15(9)

Call Revised 12/11/12

7/20/2022 4589300101S(09A).dgn
3:37:02 PM Plotted By: kfisher

LIMITED ACCESS HIGHWAY

By Resolution of the Highway Commission dated October 4, 1956.
By Resolution of the Highway Commission dated January 18, 1973.
By Resolution of the Commonwealth Transportation Board dated April 19, 2022

PROJECT MANAGER Rimpal Shah, P.E. (703) 259-2362 (NOVA District) _____
SURVEYED BY, DATE H&B Surveying and Mapping, LLC (804) 330-3781, 03/09/2021
DESIGN BY Whitman, Requardt, & Associates, LLP (804) 212-8700 _____.
SUBSURFACE UTILITY BY, DATE Accutrark, Inc. (804) 550-7740, 07/07/2021

COMMONWEALTH OF VIRGINIA
JEFFREY D. CHENG
Lic. No. 051900
PROFESSIONAL ENGINEER

Jeffrey D Cheng
2022.07.20 16:55:50 -04'00'

Whitman, Requardt & Associates
Baltimore, Maryland
TRAFFIC ENGINEER

REVISED	STATE	STATE ROUTE	STATE PROJECT	SHEET NO.
	VA.	95	0095-076-299,C-501	15(9A)

DESIGN FEATURES RELATING TO CONSTRUCTION OR TO REGULATION AND CONTROL OF TRAFFIC MAY BE SUBJECT TO CHANGE AS DEEMED NECESSARY BY THE DEPARTMENT

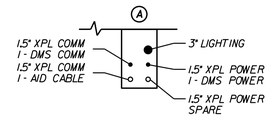

CONDUIT INSTALLED BY STD.ECI-2

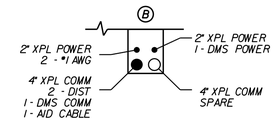

CONDUIT INSTALLED BY STD.ECI-2

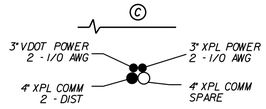

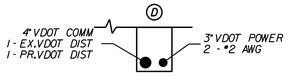

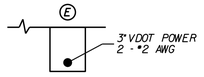

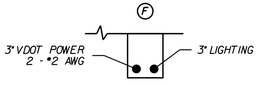

CONDUIT INSTALLED BY STD.ECI-2

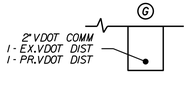

CONDUIT INSTALLED BY STD.ECI-2

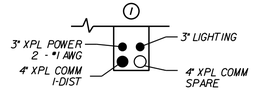

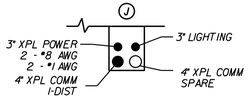

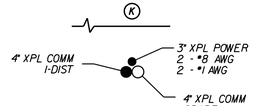

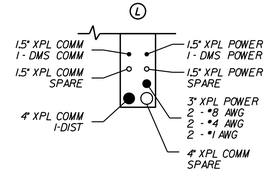

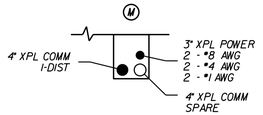

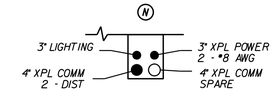

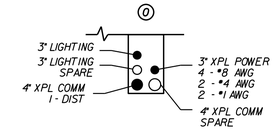

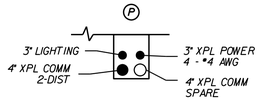

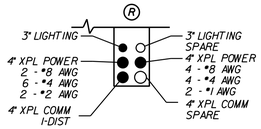

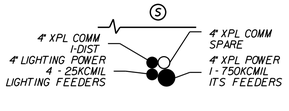

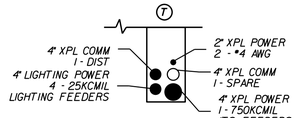

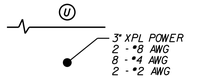

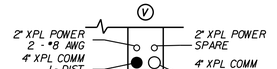

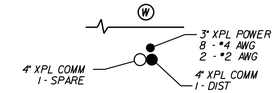

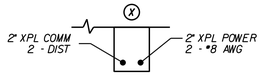

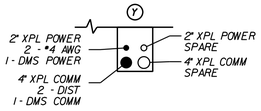

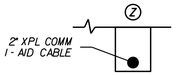

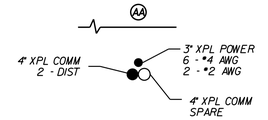

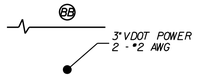

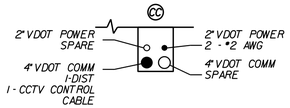

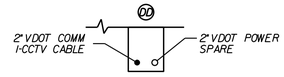

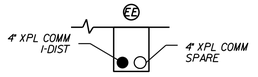

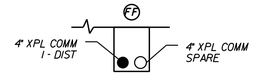

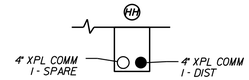

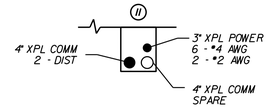

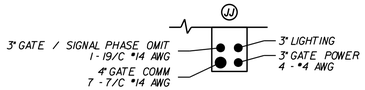

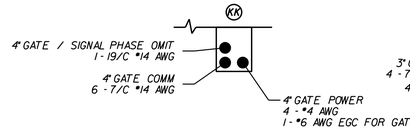

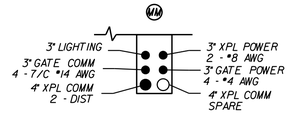

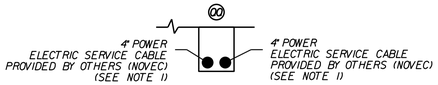

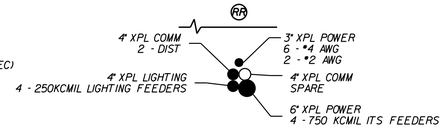

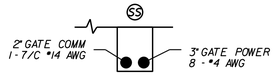

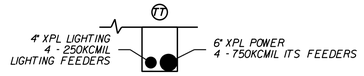

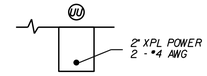

AFC PLANS

NOTE:
1. CONDUIT SWEEPS FOR CONDUIT DESIGNATED FOR USE BY NOVEC SHALL HAVE A 3 FOOT MINIMUM RADIUS SWEEP.

	PROJECT	SHEET NO.
	0095-076-299	15(9A)

Cell Revised 12/11/12

7/20/2022 4589300101S(09B).dgn
3:37:21 PM Plotted By: kfisher

LIMITED ACCESS HIGHWAY

By Resolution of the Highway Commission dated October 4, 1956.
By Resolution of the Highway Commission dated January 18, 1973.
By Resolution of the Commonwealth Transportation Board dated April 19, 2022

PROJECT MANAGER Rimpal Shah, P.E. (703) 259-2362 (NOVA District) _____
SURVEYED BY, DATE H&B Surveying and Mapping, LLC (804) 330-3781, 03/09/2021
DESIGN BY Whitman, Requardt, & Associates, LLP (804) 212-8700 _____
SUBSURFACE UTILITY BY, DATE Accumark, Inc. (804) 550-7740, 07/07/2021

COMMONWEALTH OF VIRGINIA
JEFFREY D. CHENG
Lic. No. 051900
PROFESSIONAL ENGINEER

Jeffrey D Cheng
2022.07.20 16:56:11 -04'00'

Whitman, Requardt & Associates
Baltimore, Maryland
TRAFFIC ENGINEER

REVISED	STATE	STATE ROUTE	STATE PROJECT	SHEET NO.
	VA.	95	0095-076-299,C-501	15(9B)

DESIGN FEATURES RELATING TO CONSTRUCTION OR TO REGULATION AND CONTROL OF TRAFFIC MAY BE SUBJECT TO CHANGE AS DEEMED NECESSARY BY THE DEPARTMENT

CONSTRUCTION DETAILS:

1. INSTALL BRIDGE MOUNTED JUNCTION BOX FOR GATE POWER.
2. INSTALL BRIDGE MOUNTED JUNCTION BOX FOR GATE COMMUNICATIONS.
3. INSTALL BRIDGE MOUNTED JUNCTION BOX FOR GATE/TRAFFIC SIGNAL PHASE OMIT.
4. INSTALL BRIDGE MOUNTED JUNCTION BOX FOR AID COMMUNICATIONS.
5. INSTALL JUNCTION BOX EMBEDDED IN CONCRETE BARRIER FOR GATE POWER.
6. INSTALL JUNCTION BOX EMBEDDED IN CONCRETE BARRIER FOR GATE COMMUNICATIONS.
7. INSTALL JUNCTION BOX EMBEDDED IN CONCRETE BARRIER FOR DMS POWER.
8. INSTALL JUNCTION BOX EMBEDDED IN CONCRETE BARRIER FOR DMS COMMUNICATIONS.
9. CONDUITS FROM OFF OF THE BRIDGE SHALL PASS THROUGH THE ABUTMENT BACKWALL AND CONNECT TO THE BRIDGE MOUNTED CONDUIT SYSTEM.
10. INSTALL PIER CAP MOUNTED JUNCTION BOX FOR AID COMMUNICATIONS.
11. CONNECT CONDUIT RUNNING DOWN BRIDGE PIER TO CONDUIT IN GROUND.
12. INSTALL CONDUIT EXPOSED ON SLOPE PROTECTION AND ABUTMENT BACK WALL AND CONNECT TO PROPOSED BRIDGE MOUNTED CONDUIT SYSTEM.

NOTES:

1. SEE DWG. NO. 15(9) FOR DETAILS OF CONDUIT, CABLE, AND TMS DEVICE INSTALLATION OFF OF THE BRIDGE.
2. REFER TO THE OPITZ BLVD BRIDGE PLANS FOR INSTALLATION DETAILS OF ALL CONDUITS AND JUNCTION BOXES MOUNTED TO OR EMBEDDED IN PARTS OF THE OPITZ BLVD BRIDGE STRUCTURE.
3. INSTALL AID CAMERA ON PROPOSED TRAFFIC SIGNAL MAST ARM POLE. REFER TO THE TRAFFIC SIGNAL PLANS FOR ADDITIONAL CONDUIT AND WIRING DETAILS.
4. FOR INSTALLATION DETAILS OF CONDUITS AND JUNCTION BOXES WITHIN CONCRETE ROADWAY BARRIERS, SEE DETAILS ON SHEET 17(12D2).

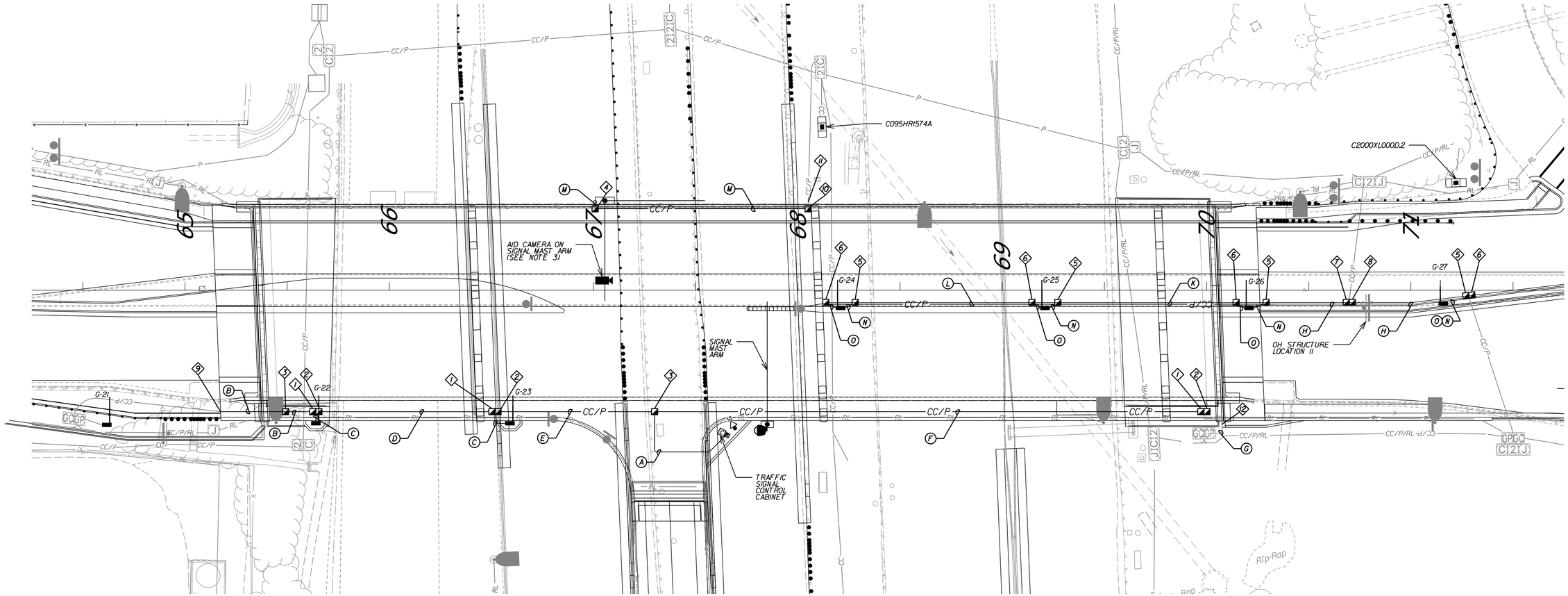

(A) 3" GATE / SIGNAL PHASE OMIT, 1-19/C #14 AWG — STRUCTURE MOUNTED

(B) 4" GATE / SIGNAL PHASE OMIT, 1-19/C #14 AWG; 4" GATE COMM, 6-7/C #14 AWG; 4" GATE POWER, 4-#4 AWG, 1-#6 AWG EGC FOR GATES — STRUCTURE MOUNTED

(C) 2" GATE COMM, 1-7/C #14 AWG; 2" GATE POWER, 4-#4 AWG, 1-#6 AWG EGC FOR GATES — STRUCTURE MOUNTED

(D) 4" GATE / SIGNAL PHASE OMIT, 1-19/C #14 AWG; 4" GATE COMM, 5-7/C #14 AWG; 4" GATE POWER, 4-#4 AWG, 1-#6 AWG EGC FOR GATES — STRUCTURE MOUNTED

(E) 4" GATE / SIGNAL PHASE OMIT, 1-19/C #14 AWG; 4" GATE COMM, 4-7/C #14 AWG; 4" GATE POWER, 4-#4 AWG — STRUCTURE MOUNTED

(F) 4" GATE COMM, 4-7/C #14 AWG; 4" GATE POWER, 4-#4 AWG — STRUCTURE MOUNTED

(G) 4" GATE COMM, 4-7/C #14 AWG; 4" GATE POWER, 4-#4 AWG — RIGID GALVANIZED STEEL CONDUIT

(H) 3" GATE COMM, 3-7/C #14 AWG; 3" GATE POWER, 4-#4 AWG, 1-#6 AWG EGC FOR GATES — EMBEDDED

(K) 3" GATE COMM, 2-7/C #14 AWG; 3" GATE POWER, 4-#4 AWG, 1-#6 AWG EGC FOR GATES — EMBEDDED

(L) 3" GATE COMM, 1-7/C #14 AWG; 3" GATE POWER, 4-#4 AWG, 1-#6 AWG EGC FOR GATES — EMBEDDED

(M) 4" XPL COMM, 1-AID CABLE — STRUCTURE MOUNTED

(N) 2" GATE POWER, 4-#4 AWG, 1-#6 AWG EGC FOR GATES — EMBEDDED

(O) 2" GATE COMM, 1-7/C #14 AWG — EMBEDDED

AFC PLANS

SCALE 0 25' 50'

PROJECT	SHEET NO.
0095-076-299	15(9B)

Cell Revised 12/11/12

7/20/2022 4589300101S(09C).dgn
3:37:55 PM Plotted By: kfisher

LIMITED ACCESS HIGHWAY

By Resolution of the Highway Commission dated October 4, 1956.
By Resolution of the Highway Commission dated January 18, 1973.
By Resolution of the Commonwealth Transportation Board dated April 19, 2022

PROJECT MANAGER Rimpal Shah, P.E. (703) 259-2362 (NOVA District) _____
SURVEYED BY, DATE H&B Surveying and Mapping, LLC (804) 330-3781, 03/09/2021
DESIGN BY Whitman, Requardt, & Associates, LLP (804) 212-8700 _____.
SUBSURFACE UTILITY BY, DATE Accumark, Inc. (804) 550-7740, 07/07/2021

COMMONWEALTH OF VIRGINIA
JEFFREY D. CHENG
Lic. No. 051900
PROFESSIONAL ENGINEER

Jeffrey D Cheng
2022.07.20 16:56:30 -04'00'

Whitman, Requardt & Associates
Baltimore, Maryland
TRAFFIC ENGINEER

REVISED	STATE	STATE ROUTE	STATE PROJECT	SHEET NO.
	VA.	95	0095-076-299,C-501	15(9C)

DESIGN FEATURES RELATING TO CONSTRUCTION OR TO REGULATION AND CONTROL OF TRAFFIC MAY BE SUBJECT TO CHANGE AS DEEMED NECESSARY BY THE DEPARTMENT

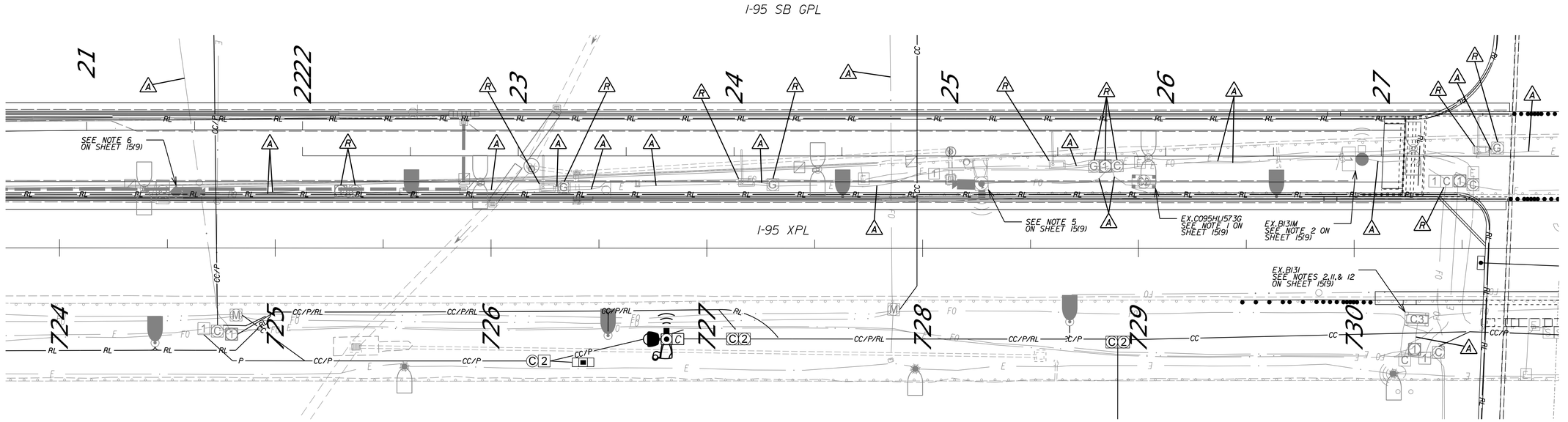

AFC PLANS

SCALE
0 25' 50'

	PROJECT	SHEET NO.
	0095-076-299	15(9C)

Roll Revised 12/11/12

7/20/2022 4589300101511O1.dgn
3:38:15 PM Plotted By: kfisher

LIMITED ACCESS HIGHWAY

By Resolution of the Highway Commission dated October 4, 1956.
By Resolution of the Highway Commission dated January 18, 1973.
By Resolution of the Commonwealth Transportation Board dated April 19, 2022

PROJECT MANAGER: Rimpal Shah, P.E. (703) 259-2362 (NOVA District) _____
SURVEYED BY, DATE: H&B Surveying and Mapping, LLC (804) 330-3781, 03/09/2021
DESIGN BY: Whitman, Requardt, & Associates, LLP (804) 212-8700 _____
SUBSURFACE UTILITY BY, DATE: Accutrack, Inc. (804) 550-7740, 07/07/2021

COMMONWEALTH OF VIRGINIA
JEFFREY D. CHENG
Lic. No. 051900
PROFESSIONAL ENGINEER

Jeffrey D Cheng
2022.07.20 16:57:19 -04'00'

Whitman, Requardt & Associates
Baltimore, Maryland
TRAFFIC ENGINEER

REVISED	STATE	STATE ROUTE	STATE PROJECT	SHEET NO.
	VA.	95	0095-076-299,C-501	15(10)

DESIGN FEATURES RELATING TO CONSTRUCTION OR TO REGULATION AND CONTROL OF TRAFFIC MAY BE SUBJECT TO CHANGE AS DEEMED NECESSARY BY THE DEPARTMENT

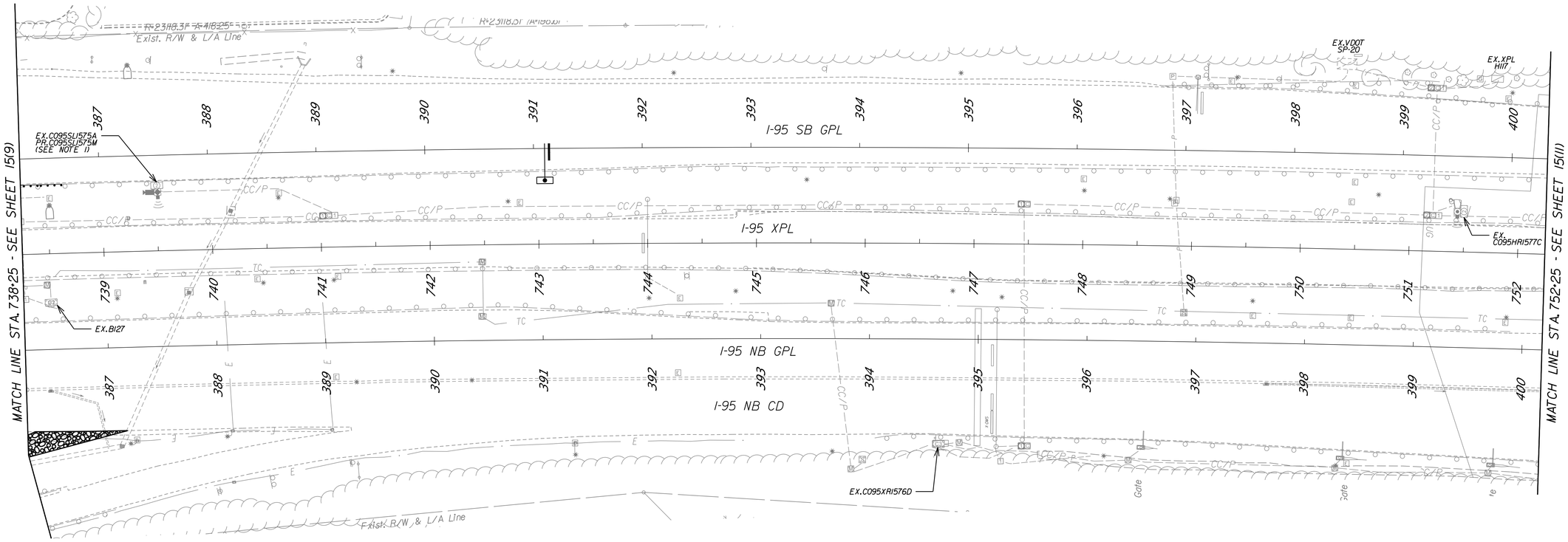

NOTES:

1. EXISTING CABINET, MVD, AND POLE TO REMAIN. REMOVE AND SALVAGE EX. AID AND AID CONTROL EQUIPMENT AND RETURN TO 95 EXPRESS.

AFC PLANS

SCALE
0 50' 100'

PROJECT	SHEET NO.
0095-076-299	15(10)

Cell Revised 12/11/12

7/20/2022 4589300101511(11).dgn
3:38:38 PM Plotted By: kfisher

LIMITED ACCESS HIGHWAY By Resolution of the Highway Commission dated October 4, 1956
By Resolution of the Highway Commission dated January 18, 1973
By Resolution of the Commonwealth Transportation Board dated April 19, 2022

PROJECT MANAGER Rimpal Shah, P.E. (703) 259-2362 (NOVA District) _____
SURVEYED BY, DATE B&B Surveying and Mapping, LLC (804) 330-3781, 03/09/2021
DESIGN BY Whitman, Requardt & Associates, LLP (804) 212-8700 _____
SUBSURFACE UTILITY BY, DATE Accumark, Inc. (804) 550-7740, 07/07/2021

COMMONWEALTH OF VIRGINIA
JEFFREY D. CHENG
Lic. No. 051900
PROFESSIONAL ENGINEER

Jeffrey D Cheng
2022.07.20 16:57:38 -04'00'
Whitman, Requardt & Associates
Baltimore, Maryland
TRAFFIC ENGINEER

REVISED	STATE	STATE ROUTE	STATE PROJECT	SHEET NO.
	VA.	95	0095-076-299,C-501	15(11)

DESIGN FEATURES RELATING TO CONSTRUCTION OR TO REGULATION AND CONTROL OF TRAFFIC MAY BE SUBJECT TO CHANGE AS DEEMED NECESSARY BY THE DEPARTMENT

NOTES:

1. REMOVE AND SALVAGE EXISTING CABINET C095LI578D AND RETURN TO 95 EXPRESS. REMOVE EXISTING CABINET FOUNDATION.
2. REMOVE AND SALVAGE EXISTING DMS AND RETURN TO 95 EXPRESS.
3. CABINETS CONNECTED TO HUB AT THE FOLLOWING LOCATIONS ARE NOT SHOWN ON THE PLANS SINCE THEY ARE LOCATED OUTSIDE THE LIMITS OF CONSTRUCTION: C095HR1571A (STA.770+02).

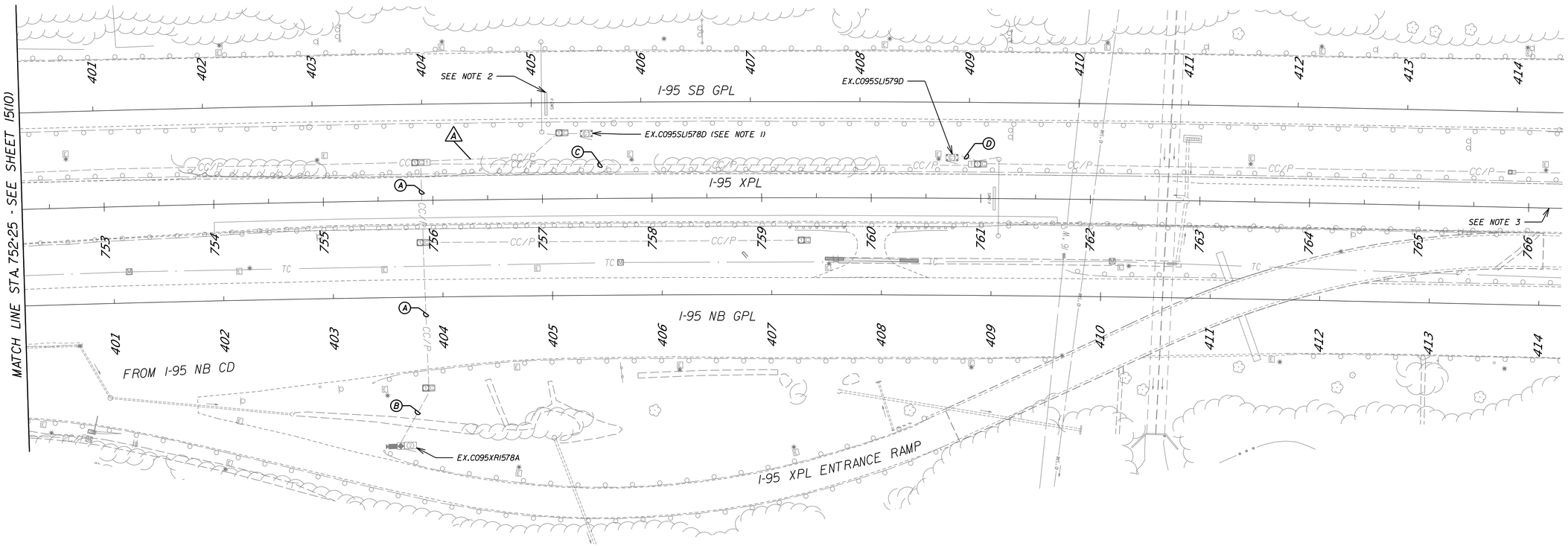

A
2" XPL COMM (E)
2 - DIST
(1 - DIST TO BE REMOVED)
1 - DIST
2" XPL COMM (E)
2" XPL POWER (E)
2 - #8 AWG
2" XPL POWER (E)

B
2" XPL COMM (E)
2 - DIST
(1 - DIST TO BE REMOVED)
1 - DIST
2" XPL COMM (E)
2" XPL POWER (E)
2 - #8 AWG
2" XPL POWER (E)

C
2" XPL POWER (E)
2" XPL POWER (E)
2 - #6 AWG
2 - #8 AWG
4" XPL COMM (E)
1 - DIST
(1 - DIST TO BE REMOVED)
1 - TRUNK
1 - DIST
2" VDOT POWER (E)
4" XPL COMM (E)

D
2" XPL POWER (E)
2 - #6 AWG
1 - DMS POWER CABLE
4" XPL COMM (E)
2 - DIST
(1 - DIST TO BE REMOVED)
1 - DMS COMM CABLE
1 - DIST
2" XPL POWER (E)
4" XPL COMM (E)

AFC PLANS

SCALE 0 50' 100'

PROJECT	SHEET NO.
0095-076-299	15(11)

Civil Revised 12/11/12

7/20/2022 4589300101512(12).dgn
3:38:58 PM Plotted By: kfisher

LIMITED ACCESS HIGHWAY

By Resolution of the Highway Commission dated October 4, 1956.
By Resolution of the Highway Commission dated January 18, 1973.
By Resolution of the Commonwealth Transportation Board dated April 19, 2022

PROJECT MANAGER Rimpal Shah, P.E. (703) 259-2362 (NOVA District) _____
SURVEYED BY, DATE H&B Surveying and Mapping, LLC (804) 330-3781, 03/09/2021
DESIGN BY Whitman, Requardt, & Associates, LLP (804) 212-8700 _____.
SUBSURFACE UTILITY BY, DATE Accumark, Inc. (804) 550-7740, 07/07/2021

COMMONWEALTH OF VIRGINIA
JEFFREY D. CHENG
Lic. No. 051900
PROFESSIONAL ENGINEER

Jeffrey D Cheng
2022.07.20 16:58:00 -04'00'

Whitman, Requardt & Associates
Baltimore, Maryland
TRAFFIC ENGINEER

REVISED	STATE	STATE ROUTE	STATE PROJECT	SHEET NO.
	VA.	95	0095-076-299,C-501	15(12)

DESIGN FEATURES RELATING TO CONSTRUCTION OR TO REGULATION AND CONTROL OF TRAFFIC MAY BE SUBJECT TO CHANGE AS DEEMED NECESSARY BY THE DEPARTMENT

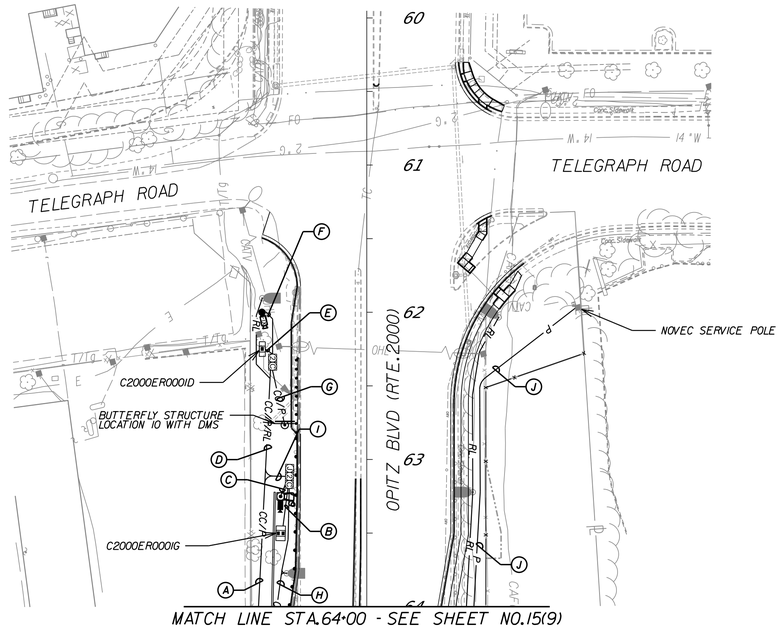

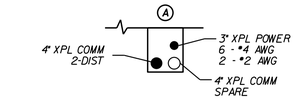

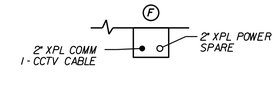

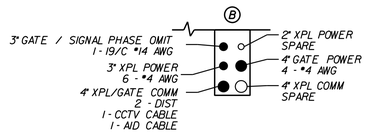

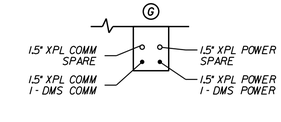

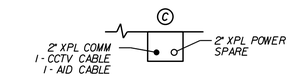

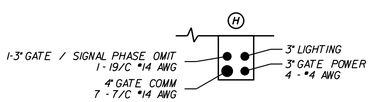

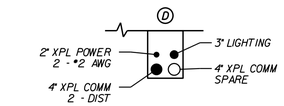

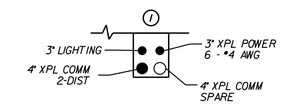

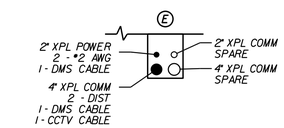

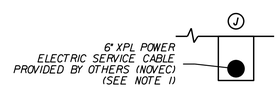

NOTES:

1. CONDUIT SWEEPS FOR CONDUITS DESIGNATED FOR USE BY NOVEC SHALL HAVE A 3 FOOT MINIMUM RADIUS SWEEP.

AFC PLANS

SCALE
0 50' 100'

PROJECT	SHEET NO.
0095-076-299	15(12)

Cell Revised 12/11/12

7/20/2022 4589300101S(13).dgn
3:39:31 PM Plotted By: kfisher

LIMITED ACCESS HIGHWAY By Resolution of the Highway Commission dated October 4, 1956.
By Resolution of the Highway Commission dated January 18, 1973.
By Resolution of the Commonwealth Transportation Board dated April 19, 2022

PROJECT MANAGER Rimpal Shah, P.E. (703) 259-2362 (NOVA District) _____
SURVEYED BY, DATE B&B Surveying and Mapping, LLC (804) 330-3781, 03/09/2021
DESIGN BY Whitman, Requardt, & Associates, LLP (804) 212-8700 _____
SUBSURFACE UTILITY BY, DATE Accutrak Inc. (804) 550-7740, 07/07/2021

COMMONWEALTH OF VIRGINIA
JEFFREY D. CHENG
Lic. No. 051900
PROFESSIONAL ENGINEER

Jeffrey D Cheng
2022.07.20 16:58:25 -04'00'

Whitman, Requardt & Associates
Baltimore, Maryland
TRAFFIC ENGINEER

REVISED	STATE	STATE ROUTE	STATE PROJECT	SHEET NO.
	VA.	95	0095-076-299,C-501	15(13)

DESIGN FEATURES RELATING TO CONSTRUCTION OR TO REGULATION AND CONTROL OF TRAFFIC MAY BE SUBJECT TO CHANGE AS DEEMED NECESSARY BY THE DEPARTMENT

NOTES:

1. SPLICE (2) #4 AWG PROPOSED CONDUCTORS IN THE PROPOSED CONDUIT TO THE EXISTING CONDUCTORS IN THE EXISTING JUNCTION BOX THAT PROVIDE POWER TO EXISTING CABINET C095XRI574D.ENSURE THAT THE CONDUCTORS ARE SPLICED PROPERLY TO RESTORE POWER TO EXISTING CABINET C095XRI574D FROM EXISTING HH17.

2. DISCONNECT THE (2) EXISTING XPL DISTRIBUTION FIBER CABLES FROM THE EXISTING CABINET AND REMOVE. FEED THE (2) PROPOSED XPL DISTRIBUTION FIBER CABLES INTO THE PROPOSED CABINET AND TERMINATE AND SPLICE THE CABLES PER THE FIBER CONNECTION DIAGRAM PLANS (152F(14)).

3. INSTALL DMS VERIFICATION CAMERA ON EXISTING CANTILEVER STRUCTURE FOLLOWING MOUNTING DETAILS ON SHEET (62A3). INSTALL THE CAMERA JUST BELOW THE TRUSS ON THE SIDE OF THE STRUCTURE FACING AWAY FROM OPITZ BLVD. INSTALL 2 INCH RGS CONDUIT USING STAINLESS STEEL BANDINGS FROM THE BASE OF THE STRUCTURE TO THE ELEVATION OF THE CAMERA AND TERMINATE THE CONDUIT WITH A WEATHERHEAD.

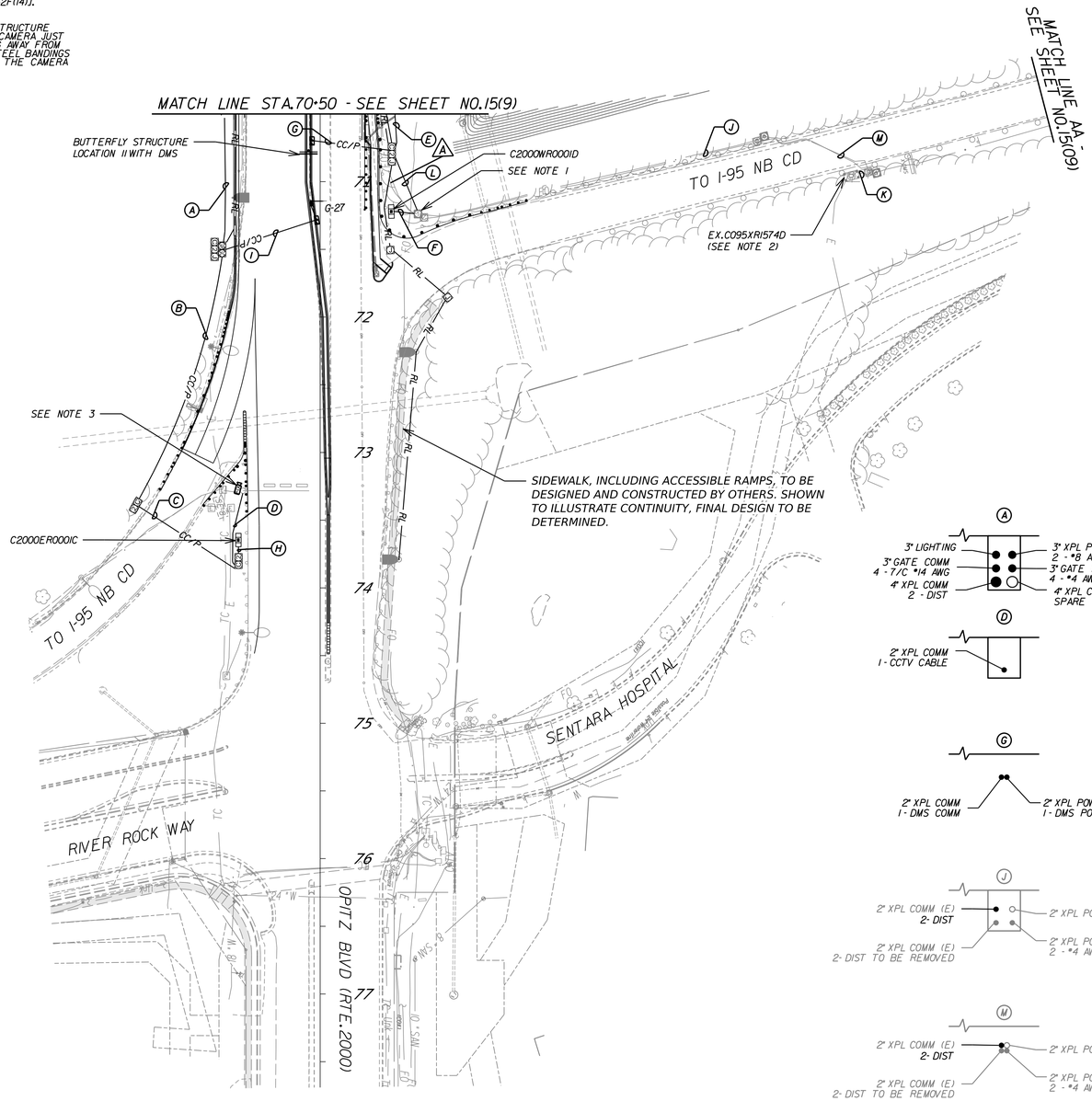

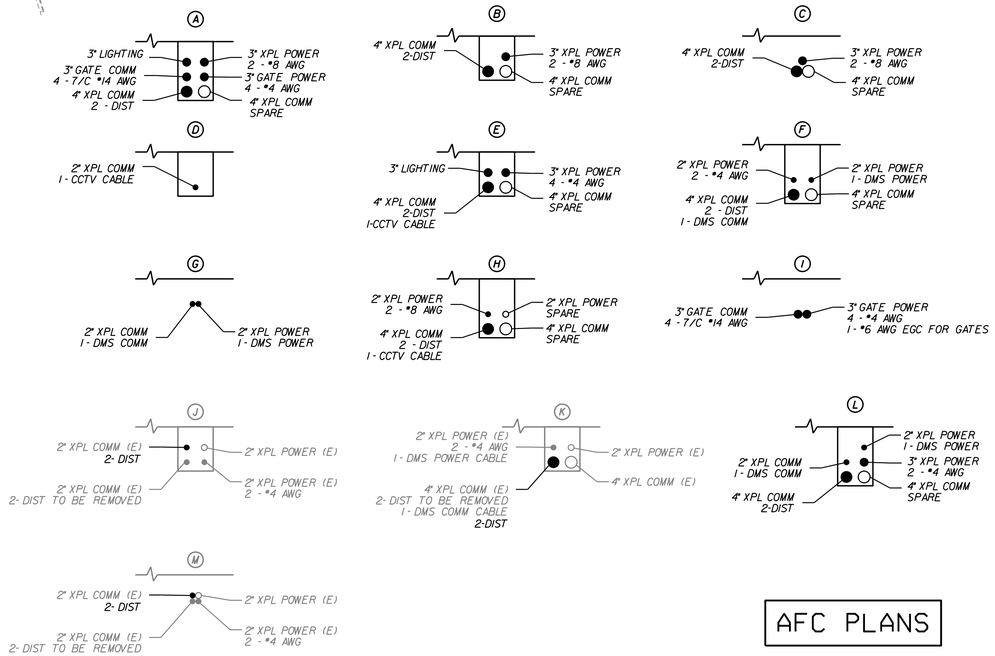

AFC PLANS

SCALE
0 50' 100'

PROJECT	SHEET NO.
0095-076-299	15(13)

Cell Revised 12/11/12

7/20/2022 4589300101601(01).dgn
2:49:01 PM Plotted By: sswearman

LIMITED ACCESS HIGHWAY By Resolution of the Highway Commission dated October 4, 1956.
By Resolution of the Highway Commission dated January 18, 1973.
By Resolution of the Commonwealth Transportation Board dated April 19, 2022

PROJECT MANAGER Rimpal Shah, P.E. (703) 259-2362 (NOVA District) _____
SURVEYED BY, DATE H&B Surveying and Mapping, LLC (804) 330-3781, 03/09/2021
DESIGN BY Whitman, Requardt & Associates, LLP (804) 212-8700 _____.
SUBSURFACE UTILITY BY, DATE Accutrak, Inc. (804) 550-7740, 07/07/2021

COMMONWEALTH OF VIRGINIA
JEFFREY D. CHENG
Lic. No. 051900
PROFESSIONAL ENGINEER

Jeffrey D Cheng
2022.07.20 16:04:59 -04'00'

Whitman, Requardt & Associates
Baltimore, Maryland
TRAFFIC ENGINEER

REVISED	STATE	STATE ROUTE	STATE PROJECT	SHEET NO.
	VA.	95	0095-076-299,C-501	16(1)

DESIGN FEATURES RELATING TO CONSTRUCTION OR TO REGULATION AND CONTROL OF TRAFFIC MAY BE SUBJECT TO CHANGE AS DEEMED NECESSARY BY THE DEPARTMENT

SIGNING AND PAVEMENT MARKING KEY PLAN

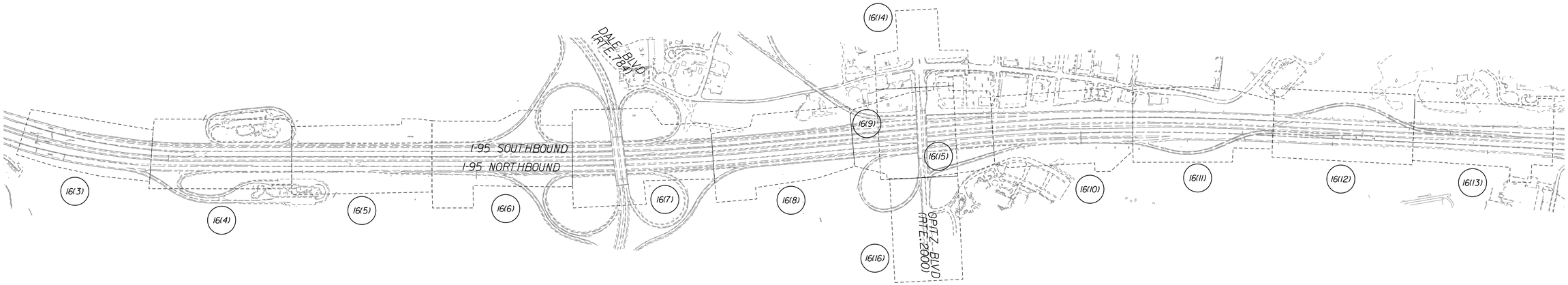

SHEET INDEX

16(1)	SIGNING SHEET INDEX, KEY PLAN, LEGEND, AND GENERAL NOTES
16(2A1) - 16(2A4)	SIGN SCHEDULE
16(2B1) - 16(2B10)	SIGN FIGURE DETAILS
16(2C1) - 16(2C4)	SIGN STRUCTURE ELEVATIONS
16(2D1)	NOTES FOR SAFETY IMPROVEMENTS
16(2D2)	SIGNING AND PAVEMENT MARKING DETAILS
16(3)-16(21)	PLAN SHEETS

STANDARD SIGN LEGEND

PLAN ITEM	PLAN SYMBOL PROPOSED	PLAN SYMBOL EXISTING
Single Post Sign Support		
Double Post Sign Support		
Butterfly Sign Support		N/A
O/H Cantilever Sign Support		
O/H Span Sign Support		

SIGN CALL-OUTS

- Existing Sign to Remain or to be Relocated
- Existing Sign to be Removed
- Proposed Sign Panel

SIGN LABELS

Proposed Sign Assemblies

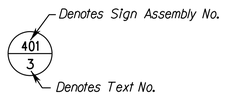

Relocated Sign Assemblies

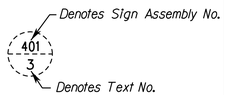

GENERAL NOTES - SIGNING & PAVEMENT MARKINGS

1. ALL PROPOSED SIGNING AND PAVEMENT MARKINGS SHALL BE IN ACCORDANCE WITH EACH OF THE FOLLOWING MANUALS, OR THE MOST RECENT REVISION THERETO:
   A. MANUAL ON UNIFORM TRAFFIC CONTROL DEVICES.
   B. THE VIRGINIA SUPPLEMENT TO THE MANUAL ON UNIFORM TRAFFIC CONTROL DEVICES.
   C. THE 2020 VIRGINIA DEPARTMENT OF TRANSPORTATION ROAD AND BRIDGE SPECIFICATIONS.
   D. THE 2020 VIRGINIA DEPARTMENT OF TRANSPORTATION ROAD AND BRIDGE STANDARDS.
   E. FHWA STANDARD HIGHWAY SIGNS MANUAL
   F. VIRGINIA STANDARD HIGHWAY SIGNS MANUAL
2. EXISTING PAVEMENT MARKINGS AND/OR MARKERS THAT CONFLICT WITH THE PROPOSED MARKINGS AND/OR MARKERS SHALL BE ERADICATED BY AN APPROVED METHOD, ACCORDING TO 2020 VDOT ROAD AND BRIDGE SPECIFICATIONS 512.03.
3. LIMITS SHOWN OF PROPOSED MARKINGS ARE APPROXIMATE AND SHALL BE MODIFIED IN THE FIELD TO ENSURE THAT PROPOSED PAVEMENT MARKINGS CONTINUE UNTIL EXISTING PAVEMENT MARKING CAN BE MATCHED.
4. EXISTING SIGNS WITHIN THE LIMITS OF THE CONTRACT WHICH HAVE NOT BEEN ACCOUNTED FOR IN THE PLAN SHALL BE RELOCATED OR REMOVED AS DIRECTED BY THE 95 EXPRESS ENGINEER.
5. ALL COMPONENTS OF AN EXISTING SIGN INSTALLATION WHICH ARE REMOVED SHALL BE PROPERLY DISPOSED OF BY THE CONTRACTOR AT AN OFF-SITE LOCATION.
6. EXISTING SIGN PANELS SCHEDULED TO BE REUSED/RELOCATED MAY BE REPLACED WITH NEW SIGNS AT THE DISCRETION OF THE PROJECT ENGINEER.
7. ALL EXISTING TRAFFIC SIGNS WHICH ARE TO BE RELOCATED SHALL REMAIN IN PLACE UNTIL THE NEW SIGN STRUCTURE IS IN PLACE.
8. THE REMOVAL OR MODIFICATION OF EXISTING SIGN PANELS, STRUCTURES, OR FOUNDATIONS SHALL CONFORM TO SECTION 510 OF THE 2020 VDOT ROAD AND BRIDGE SPECIFICATIONS.
9. ALL EXISTING SIGN LOCATIONS ARE APPROXIMATE AND SHALL BE FIELD VERIFIED. ALL PROPOSED SIGN LOCATIONS SHALL BE APPROVED BY THE ENGINEER.
10. ALL STRIPING, WHERE MATCHING TO EXISTING, SHALL BE DONE IN ACCORDANCE WITH 2016 VDOT ROAD AND BRIDGE STANDARDS.
11. ALL NEW LANE LINES, EXIT RAMPS, AND ENTRANCE RAMPS ALONG I-95 AND THE ASSOCIATED RAMPS SHALL BE SUPPLEMENTED WITH PLASTIC INLAID MARKERS. ALL NEW LANE LINES, CENTER LINES, AND TURN LANE LINES ON ASPHALT SURFACES OF OPITZ BLVD SHALL BE SUPPLEMENTED WITH PLASTIC INLAID MARKERS. PLASTIC INLAID MARKERS SHALL NOT BE INSTALLED ON THE OPITZ BLVD BRIDGE DECK SURFACE. ALL PLASTIC INLAND MARKERS SHALL BE INSTALLED IN ACCORDANCE WITH VDOT ROAD AND BRIDGE STANDARDS PM-8 AND/OR PM-9 AND THE VIRGINIA SUPPLEMENT TO THE MUTCD. DAMAGED EXISTING PAVEMENT MARKERS OF ANY TYPE WITHIN THE PROJECT LIMITS SHALL BE REPLACED.
12. FOR ADDITIONAL INFORMATION ON LANE AND SHOULDER WIDTHS, SEE ROADWAY PLANS AND TYPICAL SECTIONS.
13. PRIOR TO FOUNDATION DESIGN, THE CONTRACTOR SHALL COORDINATE WITH ALL SUBCONTRACTORS AND UTILITIES IN PROXIMITY OF THE SIGN STRUCTURE WHERE APPLICABLE.
14. SIGN FOUNDATIONS SHALL BE STAKED OUT USING ELECTRONIC DATA TO BE PROVIDED BY THE ENGINEER. FINAL LOCATION OF SIGN FOUNDATION SHALL BE ADJUSTED IN THE FIELD AS NEEDED TO CONFORM TO THE FIELD CONDITIONS AND UTILITIES AS MARKED. EXTREME LOCATION CHANGES SHALL BE APPROVED BY THE ENGINEER.
15. THE CONTRACTOR SHALL TAKE NOTE OF SIGNS TO BE RELOCATED OR SALVAGED AS CALLED OUT IN THE PLANS. SIGNS FOR RELOCATION OR SALVAGE SHALL BE REMOVED FROM THE STRUCTURE AND SUITABLY STORED AND PROTECTED PRIOR TO THE REMOVAL OF THE STRUCTURE. ANY SIGNS TO BE RELOCATED OR SALVAGED THAT ARE DAMAGED SHALL BE REPLACED BY THE CONTRACTOR AT NO COST TO 95 EXPRESS.
16. EXISTING GROUND MOUNTED SIGNS IDENTIFIED FOR REMOVAL AND DISPOSAL MAY BE REUSED IF IN GOOD CONDITION WITH THE APPROVAL OF THE ENGINEER.
17. THE CONTRACTOR SHALL FIELD VERIFY SIGN LIGHTING ELECTRICAL CIRCUITS PRIOR TO ABANDONING ELECTRICAL CONDUCTORS SHOWN ON THE PLANS. THE CONTRACTOR SHALL NOTIFY THE ENGINEER IMMEDIATELY IF DEMOLITION OR NEW CONSTRUCTION WILL IMPACT SERVICE TO POWERED COMPONENTS NOT DESIGNATED TO LOSE ELECTRICAL SERVICE.

AFC PLANS

PROJECT	SHEET NO.
0095-076-299	16(1)

Call Revised 12/11/12

LIMITED ACCESS HIGHWAY

By Resolution of the Highway Commission dated October 4, 1956.
By Resolution of the Highway Commission dated January 18, 1973.
By Resolution of the Commonwealth Transportation Board dated April 19, 2022

PROJECT MANAGER: Rimpal Shah, P.E. (703) 259-2362 (NOVA District) _____
SURVEYED BY, DATE: B&B Surveying and Mapping, LLC (804) 330-3781, 03/09/2021
DESIGN BY: Whitman, Requardt, & Associates, LLP (804) 212-8700 _____
SUBSURFACE UTILITY BY, DATE: Accutrark, Inc. (804) 550-7740, 07/07/2021

AFC PLANS

COMMONWEALTH OF VIRGINIA
JEFFREY D. CHENG
Lic. No. 051900
PROFESSIONAL ENGINEER

Jeffrey D Cheng
2022.07.20 16:09:33 -04'00'

Whitman Requardt & Associates
Baltimore, Maryland
TRAFFIC ENGINEER

REVISED	STATE	STATE ROUTE	STATE PROJECT	SHEET NO.
	VA.	95	0095-076-299,C-501	I6(2AI)

DESIGN FEATURES RELATING TO CONSTRUCTION OR TO REGULATION AND CONTROL OF TRAFFIC MAY BE SUBJECT TO CHANGE AS DEEMED NECESSARY BY THE DEPARTMENT

SIGN SCHEDULE
PROPOSED SIGNS AND EXISTING SIGNS TO BE RELOCATED

TEXT NO.	SIGN ASSEMBLY NO(s).	TEXT	SIGN ASSEMBLY COMPONENTS: MUTCD ST'D.	PANEL SIZE: W	PANEL SIZE: H	QTY.	SIGN PANEL AREA (s.f.): per ASSEMBLY	SIGN PANEL AREA (s.f.): ALL ASSEMBLIES	PROP. SIGN STRUCTURE ST'D.	REMARKS
1	301	Opitz EXPRESS SPEED LIMIT 65	SPECIAL	48"	30"	1	10	10	SSP-VA-N	SEE SIGN FIGURE DETAIL SHEET I6(2B3)
			R2-1	48"	60"	1	20	20		
2	401A	LOCAL EXITS 234 Dumfries Manassas ½ MILE	SPECIAL	14'-0"	15'-0"	1	210	210	OSS-1	SEE SIGN FIGURE DETAIL SHEET I6(2B3) O/H LOCATION 1B
3	402A, 503	EXPRESS LANES EXPRESS FULL COLOR DMS	SPECIAL	20'-0"	11'-0"	2	220	440	OSS-1	SEE SIGN FIGURE DETAIL SHEET I6(2B3) O/H LOCATION 2B O/H LOCATION 12
4	401B	LEFT EXPRESS EXIT 2000 Opitz Blvd 1 MILE	E1-5aP	6'-0"	2'-6"	1	15	15	SSP-VA-N	SEE SIGN FIGURE DETAIL SHEET I6(2B3)
			SPECIAL	20'-0"	11'-0"	1	220	220	OSS-1	O/H LOCATION 1A
6	501	Opitz ONLY EXPRESS LANES ENTRANCE	SPECIAL	5'-6"	9'-0"	1	49.5	49.5	SEE REMARKS	SEE SIGN FIGURE DETAIL SHEET I6(2B2) BARRIER MOUNT DETAIL ON I6(2D2)
7	502		W4-1	48"	48"	1	16	16	SEE REMARKS	BAND SIGN TO O/H LOCATION 12
8	601A	LOCAL EXITS 234 Dumfries Manassas 1 MILE	SPECIAL	14'-0"	15'-0"	1	210	210	OSS-1	SEE SIGN FIGURE DETAIL SHEET I6(2B2) O/H LOCATION 3B
9	602A	SOUTH INTERSTATE 95	SPECIAL	7'-6"	7'-6"	1	56.25	56.25	OSS-1	SEE SIGN FIGURE DETAIL SHEET I6(2B2) O/H LOCATION 4
35	603	LEFT EXPRESS LANES Opitz ONLY EXPRESS FULL COLOR DMS ENTRANCE	E1-5aP	6'-0"	2'-6"	1	15	15	OSS-1	SEE SIGN FIGURE DETAIL SHEET I6(2B2) O/H LOCATION 4
			SPECIAL	20'-0"	17'-0"	1	340	340		
10	602B	RAMP 45 MPH	W13-3	36"	48"	1	12	12	SSP-VA-B	
32	604	H NEXT EXIT	D9-2	30"	30"	1	6.25	6.25	SEE REMARKS	SEE SIGN FIGURE DETAIL SHEET I6(2B7) BAND SIGN TO O/H LOCATION 3A
			SPECIAL	30"	30"	1	6.25	6.25		
11	601B	LEFT EXPRESS EXIT 2000 Opitz Blvd ½ MILE	E1-5aP	6'-0"	2'-6"	1	15	15	OSS-1	SEE SIGN FIGURE DETAIL SHEET I6(2B4)
			SPECIAL	20'-0"	11'-0"	1	220	220		O/H LOCATION 3A
12	601C	EXPRESS LANES EXITS 95 TO 123 2 Boudinot Dr 10 95 TO 611 11	SPECIAL	20'-0"	13'-0"	1	260	260	OSS-1	SEE SIGN FIGURE DETAIL SHEET I6(2B8) O/H LOCATION 3A
13	801	LEFT Opitz ONLY EXPRESS LANES ENTRANCE ½ MILE	E1-5aP	6'-0"	2'-6"	1	15	15	OSS-1	SEE SIGN FIGURE DETAIL SHEET I6(2B1)
			SPECIAL	16'-0"	13'-6"	1	216	216		CANTILEVER LOCATION 6

NOTES:

1) ALL SIGNS SHALL BE ORIENTED AS SHOWN ON THE PLANS.
2) SIGN COLOR COMBINATIONS SHALL BE IN ACCORDANCE WITH THE FHWA SHS BOOK AND THE 2011 VIRGINIA SHS BOOK OR AS NOTED IN THE PLANS.
3) ALL POSITIVE CONTRAST GUIDE AND SPECIFIC SERVICE SIGNS SHALL UTILIZE FABRICATION LETTER TYPE L-3 OR L-4 UNLESS OTHERWISE NOTED IN THE REMARKS. ALL OTHER SIGNS SHALL UTILIZE FABRICATION LETTER TYPE L-1 OR L-2 UNLESS OTHERWISE NOTED IN THE REMARKS.
4) ALL BLACK SHEETING SHALL BE NON-REFLECTIVE.
5) SIGN STRUCTURES SHALL BE INSTALLED PER THE NOTED SIGN STANDARD.
6) ALL ST'D. STP-1 STRUCTURES TO BE SINGLE POST UNLESS OTHERWISE NOTED.

PROJECT	SHEET NO.
0095-076-299	I6(2AI)

LIMITED ACCESS HIGHWAY

By Resolution of the Highway Commission dated October 4, 1956.
By Resolution of the Highway Commission dated January 18, 1973.
By Resolution of the Commonwealth Transportation Board dated April 19, 2022

PROJECT MANAGER: Rimpal Shah, P.E. (703) 259-2362 (NOVA District) _____
SURVEYED BY, DATE: H&B Surveying and Mapping, LLC (804) 330-3781, 03/09/2021
DESIGN BY: Whitman, Requardt, & Associates, LLP (804) 212-8700 _____.
SUBSURFACE UTILITY BY, DATE: Accutark, Inc. (804) 550-1740, 07/07/2021

AFC PLANS

SIGN SCHEDULE
PROPOSED SIGNS AND EXISTING SIGNS TO BE RELOCATED

COMMONWEALTH OF VIRGINIA
JEFFREY D. CHENG
Lic. No. 051900
PROFESSIONAL ENGINEER

Jeffrey D Cheng
2022.07.20 16:09:55 -04'00'

Whitman Requardt & Associates
Baltimore, Maryland
TRAFFIC ENGINEER

REVISED	STATE	STATE ROUTE	STATE PROJECT	SHEET NO.
	VA.	95	0095-076-299,C-501	16(2A2)

DESIGN FEATURES RELATING TO CONSTRUCTION OR TO REGULATION AND CONTROL OF TRAFFIC MAY BE SUBJECT TO CHANGE AS DEEMED NECESSARY BY THE DEPARTMENT

TEXT NO.	SIGN ASSEMBLY NO(s).	TEXT	SIGN ASSEMBLY COMPONENTS: MUTCD ST'D.	PANEL SIZE: W	PANEL SIZE: H	QTY.	SIGN PANEL AREA (s.f.): per ASSEMBLY	SIGN PANEL AREA (s.f.): ALL ASSEMBLIES	PROP. SIGN STRUCTURE ST'D.	REMARKS
51	805	EXIT 40 MPH	W13-2	36"	48"	1	12	12	SSP-VA-B	
14	802	LEFT / EXPRESS LANES / Flex ONLY / EXPRESS FULL COLOR DMS	E1-5aP	6'-0"	2'-6"	1	15	15	OSS-1	SEE SIGN FIGURE DETAIL SHEET 16(2B1) O/H LOCATION 7
			SPECIAL	20'-0"	14'-0"	1	280	280		
15	803A	LEFT / EXPRESS EXIT / 2000 Opitz Blvd	E1-5aP	6'-0"	2'-6"	1	15	15	OSS-1	SEE SIGN FIGURE DETAIL SHEET 16(2B4) O/H LOCATION 5
			SPECIAL	20'-0"	12'-0"	1	240	240		
16	803B	EXPRESS LANES / 95 NORTH	SPECIAL	18'-0"	12'-0"	1	216	216	OSS-1	SEE SIGN FIGURE DETAIL SHEET 16(2B4) O/H LOCATION 5
17	804	EXPRESS EXIT	SPECIAL	5'-0"	6'-0"	1	30	30	SEE REMARKS	SEE SIGN FIGURE DETAIL SHEET 16(2B5) BARRIER MOUNT SEE DETAIL ON SHEET 16(2D2)
47	806		W3-3	48"	48"	1	16	16	SEE REMARKS	BAND SIGN TO O/H LOCATION 7
18	901	LEFT / EXPRESS LANES / 2 AXLE VEHICLES OR BUSES ONLY / HOV 3+ WITH Flex / NO TOLL	E1-5aP	5'-0"	2'-6"	1	12.5	12.5	SSP-VIA-AL	SEE SIGN FIGURE DETAIL SHEET 16(2B1)
			SPECIAL	12'-0"	12'-6"	1	150	150		

TEXT NO.	SIGN ASSEMBLY NO(s).	TEXT	SIGN ASSEMBLY COMPONENTS: MUTCD ST'D.	PANEL SIZE: W	PANEL SIZE: H	QTY.	SIGN PANEL AREA (s.f.): per ASSEMBLY	SIGN PANEL AREA (s.f.): ALL ASSEMBLIES	PROP. SIGN STRUCTURE ST'D.	REMARKS
19	902	Flex EXPRESS ONLY / EXPRESS FULL COLOR DMS / 1/4 MILE	SPECIAL	20'-0"	15'-0"	1	300	300	OSS-1	SEE SIGN FIGURE DETAIL SHEET 16(2B5) O/H LOCATION 8
48	903	H	D9-2	30"	30"	1	6.25	6.25	SEE REMARKS	STRUCTURE MOUNT (SEE NOTE 7)
			M6-1R	30"	21"	1	4.375	4.375		
49	905	EAST 2000	M3-2	36"	18"	1	4.5	4.5	SEE REMARKS	STRUCTURE MOUNT (SEE NOTE 7
			M1-V2c	36"	36"	1	9	9		
			M6-1R	30"	21"	1	4.375	4.375		
50	904	WEST 2000	M3-4	36"	18"	1	4.5	4.5	SEE REMARKS	STRUCTURE MOUNT (SEE NOTE 7)
			M1-V2c	36"	36"	1	9	9		
			M5-1L	30"	21"	1	4.375	4.375		
20	1001	LEFT / Flex ONLY / EXPRESS LANES ENTRANCE / 1 MILE	E1-5aP	6'-0"	2'-6"	1	15	15	OSS-1	SEE SIGN FIGURE DETAIL SHEET 16(2B1) CANTILEVER LOCATION 9
			SPECIAL	16'-0"	13'-6"	1	216	216		
21	1002	Commuter Information / 800-745-RIDE / COMMUTER CONNECTIONS	SPECIAL	13'-0"	8'-0"	1	104	104	SSP-VIA-T	SEE SIGN FIGURE DETAIL SHEET 16(2B5)
22	1401,1602	95 SOUTH / EXPRESS LANES / 2 AXLE VEHICLES OR BUSES ONLY / HOV 3+ WITH Flex / NO TOLL	SPECIAL	5'-0"	9'-6"	2	47.5	95	STP-2 (1) 4 INCH SQUARE TUBE SIGN POST	SEE SIGN FIGURE DETAIL SHEET 16(2B5)

NOTES:

1) ALL SIGNS SHALL BE ORIENTED AS SHOWN ON THE PLANS.
2) SIGN COLOR COMBINATIONS SHALL BE IN ACCORDANCE WITH THE FHWA SHS BOOK AND THE 2011 VIRGINIA SHS BOOK OR AS NOTED IN THE PLANS.
3) ALL POSITIVE CONTRAST GUIDE AND SPECIFIC SERVICE SIGNS SHALL UTILIZE FABRICATION LETTER TYPE L-3 OR L-4 UNLESS OTHERWISE NOTED IN THE REMARKS. ALL OTHER SIGNS SHALL UTILIZE FABRICATION LETTER TYPE L-1 OR L-2 UNLESS OTHERWISE NOTED IN THE REMARKS.
4) ALL BLACK SHEETING SHALL BE NON-REFLECTIVE.
5) SIGN STRUCTURES SHALL BE INSTALLED PER THE NOTED SIGN STANDARD.
6) ALL ST'D. STP-1 STRUCTURES TO BE SINGLE POST UNLESS OTHERWISE NOTED.
7) SEE STRUCTURAL SHEET NOS. 61a, 69, AND 122 FOR BRIDGE MOUNTED SIGN LOCATION AND SIGN STRUCTURE SUPPORT DETAILS.

	PROJECT	SHEET NO.
	0095-076-299	16(2A2)

LIMITED ACCESS HIGHWAY

By Resolution of the Highway Commission dated October 4, 1956.
By Resolution of the Highway Commission dated January 18, 1973.
By Resolution of the Commonwealth Transportation Board dated April 19, 2022

PROJECT MANAGER: Rimpal Shah, P.E. (703) 259-2362 (NOVA District)
SURVEYED BY, DATE: H&B Surveying and Mapping, LLC (804) 330-3781, 03/09/2021
DESIGN BY: Whitman, Requardt, & Associates, LLP (804) 212-8700
SUBSURFACE UTILITY BY, DATE: Accutark, Inc. (804) 550-7140, 07/07/2021

AFC PLANS

SIGN SCHEDULE
PROPOSED SIGNS AND EXISTING SIGNS TO BE RELOCATED

COMMONWEALTH OF VIRGINIA
JEFFREY D. CHENG
Lic. No. 051900
PROFESSIONAL ENGINEER

Jeffrey D Cheng
2022.07.20 16:10:19 -04'00'

Whitman Requardt & Associates
Baltimore, Maryland
TRAFFIC ENGINEER

REVISED	STATE	STATE ROUTE	STATE PROJECT	SHEET NO.
	VA.	95	0095-076-299,C-501	16(2A3)

DESIGN FEATURES RELATING TO CONSTRUCTION OR TO REGULATION AND CONTROL OF TRAFFIC MAY BE SUBJECT TO CHANGE AS DEEMED NECESSARY BY THE DEPARTMENT

TEXT NO.	SIGN ASSEMBLY NO(s).	TEXT	SIGN ASSEMBLY COMPONENTS: MUTCD ST'D.	PANEL SIZE: W	PANEL SIZE: H	QTY.	SIGN PANEL AREA (s.f.): per ASSEMBLY	SIGN PANEL AREA (s.f.): ALL ASSEMBLIES	PROP. SIGN STRUCTURE ST'D.	REMARKS
23	1402,1601		SPECIAL	5'-0"	9'-6"	2	47.5	95	STP-2 (1) 4 INCH SQUARE TUBE SIGN POST	SEE SIGN FIGURE DETAIL SHEET 16(2B7)
24	1403		SPECIAL	5'-0"	9'-6"	1	47.5	47.5	STP-2 (1) 4 INCH SQUARE TUBE SIGN POST	SEE SIGN FIGURE DETAIL SHEET 16(2B6)
25	1404		SPECIAL	13'-6"	16'-8"	1	225	225	OSS-1	SEE SIGN FIGURE DETAIL SHEET 16(2B6) BUTTERLY STRUCTURE LOCATION 10
26	1405		M3-3 M1-1 M6-3	36" 48" 30"	18" 48" 21"	1 1 1	4.5 16 4.375	4.5 16 4.375	STP-1 (1) 2 1/2 INCH 10 GA. WITH 2 3/16 INCH 10 GA. INNER POST	
27	1501		SPECIAL	10'-6"	10'-0"	1	105	105	SEE REMARKS	GM LOCATION 1
28	1502		SPECIAL	3'-6"	9'-0"	1	31.5	31.5	SEE REMARKS	SEE SIGN FIGURE DETAIL SHEET 16(2B6) STRUCTURE MOUNT (SEE NOTE 7)
29	1503		SPECIAL	120"	48"	1	40	40	STP-1 (2) 2 1/2 INCH 10 GA. WITH 2 3/16 INCH 10 GA. INNER POST	SEE SIGN FIGURE DETAIL SHEET 16(2B8)

TEXT NO.	SIGN ASSEMBLY NO(s).	TEXT	SIGN ASSEMBLY COMPONENTS: MUTCD ST'D.	PANEL SIZE: W	PANEL SIZE: H	QTY.	SIGN PANEL AREA (s.f.): per ASSEMBLY	SIGN PANEL AREA (s.f.): ALL ASSEMBLIES	PROP. SIGN STRUCTURE ST'D.	REMARKS
30	1506		W8-5	36"	36"	1	9	9	STP-1 (1) 2 INCH 14 GA.	
31	1505		SPECIAL	13'-6"	16'-8"	1	225	225	OSS-1	SEE SIGN FIGURE DETAIL SHEET 16(2B7) BUTTERFLY STRUCTURE LOCATION 11
33	1507		SPECIAL	108"	36"	1	27	27	STP-1 (2) 2 1/2 INCH 10 GA. WITH 2 3/16 INCH 10 GA. INNER POST	SEE SIGN FIGURE DETAIL SHEET 16(2B8)
34	1508	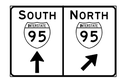	SPECIAL	12'-0"	8'-0"	1	96	96	STP-2 (3) 4 INCH SQUARE TUBE SIGN	SEE SIGN FIGURE DETAIL SHEET 16(2B8)
36	1702, 2002,2102		SPECIAL	3'-6"	9'-0"	3	31.5	94.5	STP-2 (1) 4 INCH SQUARE TUBE SIGN	SEE SIGN FIGURE DETAIL SHEET 16(2B9)
37	1703,1801, 2101		SPECIAL	3'-6"	9'-0"	3	31.5	94.5	STP-2 (1) 4 INCH SQUARE TUBE SIGN	SEE SIGN FIGURE DETAIL SHEET 16(2B9)
38	1504, 1701, 2001		SPECIAL	3'-6"	9'-0"	3	31.5	94.5	STP-2 (1) 4 INCH SQUARE TUBE SIGN	SEE SIGN FIGURE DETAIL SHEET 16(2B9) SIGN ASSEMBLY 1504 IS STRUCTURE MOUNT (SEE NOTE 7)

NOTES:

1) ALL SIGNS SHALL BE ORIENTED AS SHOWN ON THE PLANS.
2) SIGN COLOR COMBINATIONS SHALL BE IN ACCORDANCE WITH THE FHWA SHS BOOK AND THE 2011 VIRGINIA SHS BOOK OR AS NOTED IN THE PLANS.
3) ALL POSITIVE CONTRAST GUIDE AND SPECIFIC SERVICE SIGNS SHALL UTILIZE FABRICATION LETTER TYPE L-3 OR L-4 UNLESS OTHERWISE NOTED IN THE REMARKS. ALL OTHER SIGNS SHALL UTILIZE FABRICATION LETTER TYPE L-1 OR L-2 UNLESS OTHERWISE NOTED IN THE REMARKS.
4) ALL BLACK SHEETING SHALL BE NON-REFLECTIVE.
5) SIGN STRUCTURES SHALL BE INSTALLED PER THE NOTED SIGN STANDARD.
6) ALL ST'D. STP-1 STRUCTURES TO BE SINGLE POST UNLESS OTHERWISE NOTED.
7) SEE STRUCTURAL SHEET NOS. 61a, 69, AND 122 FOR BRIDGE MOUNTED SIGN LOCATION AND SIGN STRUCTURE SUPPORT DETAILS.

PROJECT	SHEET NO.
0095-076-299	16(2A3)

LIMITED ACCESS HIGHWAY

By Resolution of the Highway Commission dated October 4, 1956.
By Resolution of the Highway Commission dated January 18, 1973.
By Resolution of the Commonwealth Transportation Board dated April 19, 2022

PROJECT MANAGER: Rimpal Shah, P.E. (703) 259-2362 (NOVA District) _____
SURVEYED BY, DATE: H&B Surveying and Mapping, LLC (804) 330-3781, 03/09/2021
DESIGN BY: Whitman, Requardt, & Associates, LLP (804) 212-8700 _____.
SUBSURFACE UTILITY BY, DATE: Accutrack, Inc. (804) 550-7740, 07/07/2021

AFC PLANS

SIGN SCHEDULE
PROPOSED SIGNS AND EXISTING SIGNS TO BE RELOCATED

COMMONWEALTH OF VIRGINIA
JEFFREY D. CHENG
Lic. No. 051900
PROFESSIONAL ENGINEER

Jeffrey D Cheng
2022.07.20 16:10:44 -04'00'

Whitman Requardt & Associates
Baltimore, Maryland
TRAFFIC ENGINEER

REVISED	STATE	STATE ROUTE	STATE PROJECT	SHEET NO.
	VA.	95	0095-076-299,C-501	16(2A4)

DESIGN FEATURES RELATING TO CONSTRUCTION OR TO REGULATION AND CONTROL OF TRAFFIC MAY BE SUBJECT TO CHANGE AS DEEMED NECESSARY BY THE DEPARTMENT

TEXT NO.	SIGN ASSEMBLY NO(s).	TEXT	SIGN ASSEMBLY COMPONENTS: MUTCD ST'D.	PANEL SIZE: W	PANEL SIZE: H	QTY.	SIGN PANEL AREA (s.f.): per ASSEMBLY	SIGN PANEL AREA (s.f.): ALL ASSEMBLIES	PROP. SIGN STRUCTURE ST'D.	REMARKS
39	402B		SPECIAL	7'-0"	7'-0"	1	49	49	OSS-1	SEE SIGN FIGURE DETAIL SHEET 16(2B9) O/H LOCATION 2A
40	402C		SPECIAL	17'-0"	7'-0"	1	119	119	OSS-1	SEE SIGN FIGURE DETAIL SHEET 16(2B10) O/H LOCATION 2A
41	302	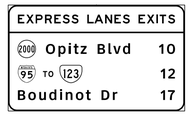	SPECIAL	20'-0"	12'-0"	1	240	240	SEE REMARKS	SEE SIGN FIGURE DETAIL SHEET 16(2B8). INSTALL ON EX.OSS-1
42	906		D10-V1	108"	42"	1	31.5	31.5	STP-1 (2) 2 1/2 INCH 10 GA.	SEE SIGN FIGURE DETAIL SHEET 16(2B7)
43	1406		R4-7 R6-1	24" 54"	30" 18"	1 1	5 6.75	5 6.75	STP-1 (1) 2 1/2 INCH 12 GA.	PROVIDE SQUARE SIGN POST ANCHOR BASE MOUNTED DIRECTLY TO CURB.
44	1509, 1510, 1603		R4-7	24"	30"	3	5	15	STP-1 (1) 2 INCH 14 GA.	PROVIDE SQUARE SIGN POST ANCHOR BASE MOUNTED DIRECTLY TO CURB OR CONCRETE BARRIER.
45	907		EX.	10'-0'	12'-0"	1	120	120	SSP-VIA-ZZ	RELOCATE EXISTING SIGN PANEL

TEXT NO.	SIGN ASSEMBLY NO(s).	TEXT	SIGN ASSEMBLY COMPONENTS: MUTCD ST'D.	PANEL SIZE: W	PANEL SIZE: H	QTY.	SIGN PANEL AREA (s.f.): per ASSEMBLY	SIGN PANEL AREA (s.f.): ALL ASSEMBLIES	PROP. SIGN STRUCTURE ST'D.	REMARKS
46	908		EX.	36"	24"	1	6	6	STP-1 (1) 2 INCH 14 GA.	RELOCATE EXISTING SIGN PANEL
5	1511		W13-3	24"	30"	1	5	5	SEE REMARKS	BAND SIGN TO PRPOSED LIGHT POLE PROVIDE 14'-0" OF CLEARANCE FROM BOTTOM OF SIGN TO TOP OF ROADWAY.

NOTES:

1) ALL SIGNS SHALL BE ORIENTED AS SHOWN ON THE PLANS.
2) SIGN COLOR COMBINATIONS SHALL BE IN ACCORDANCE WITH THE FHWA SHS BOOK AND THE 2011 VIRGINIA SHS BOOK OR AS NOTED IN THE PLANS.
3) ALL POSITIVE CONTRAST GUIDE AND SPECIFIC SERVICE SIGNS SHALL UTILIZE FABRICATION LETTER TYPE L-3 OR L-4 UNLESS OTHERWISE NOTED IN THE REMARKS. ALL OTHER SIGNS SHALL UTILIZE FABRICATION LETTER TYPE L-1 OR L-2 UNLESS OTHERWISE NOTED IN THE REMARKS.
4) ALL BLACK SHEETING SHALL BE NON-REFLECTIVE.
5) SIGN STRUCTURES SHALL BE INSTALLED PER THE NOTED SIGN STANDARD.
6) ALL ST'D. STP-1 STRUCTURES TO BE SINGLE POST UNLESS OTHERWISE NOTED.

PROJECT	SHEET NO.
0095-076-299	16(2A4)

LIMITED ACCESS HIGHWAY

By Resolution of the Highway Commission dated October 4, 1956.
By Resolution of the Highway Commission dated January 18, 1973.
By Resolution of the Commonwealth Transportation Board dated April 19, 2022

PROJECT MANAGER Rimpal Shah, P.E. (703) 259-2362 (NOVA District) _____
SURVEYED BY, DATE H&B Surveying and Mapping, LLC (804) 330-3781, 03/09/2021
DESIGN BY Whitman, Requardt, & Associates, LLP (804) 212-8700 _____
SUBSURFACE UTILITY BY, DATE Accumark, Inc. (804) 550-7740, 07/07/2021

COMMONWEALTH OF VIRGINIA
JEFFREY D. CHENG
Lic. No. 051900
PROFESSIONAL ENGINEER

Jeffrey D Cheng
2022.07.20 16:11:04 -04'00'

Whitman, Requardt & Associates
Baltimore, Maryland
TRAFFIC ENGINEER

REVISED	STATE	STATE ROUTE	STATE PROJECT	SHEET NO.
	VA.	95	0095-076-299,C-501	16(2BII)

DESIGN FEATURES RELATING TO CONSTRUCTION OR TO REGULATION AND CONTROL OF TRAFFIC MAY BE SUBJECT TO CHANGE AS DEEMED NECESSARY BY THE DEPARTMENT

SPD-2

SIGN DETAIL
1:100

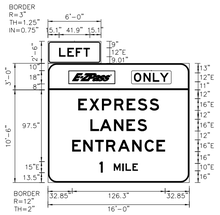

SIGN NUMBER	Text No. 20
WIDTH x HGHT.	16'-0" x 13'-6" and 6'-0" x 2'-6"
BORDER WIDTH	2" and 1.25"
CORNER RADIUS	12" and 3"
MOUNTING	Overhead
BACKGROUND	TYPE: Reflective
	COLOR: Yellow/Purple/Green
LEGEND/BORDER	TYPE: Reflective
	COLOR: Black/White/White

SYMBOL	ROT	X	Y	WID	HT
	0	28	8	63	18

Panel Style: Guide Sign.ssl
Dimensions are in inches.tenths
Letter locations are panel edge to lower left corner

LETTER POSITIONS (X)

L	E	F	T																	LENGTH	SERIES/SIZE
15.1	26.4	37.7	48.1																	47.8	E 12
O	N	L	Y																		E
116.8	129.8	142.4	152.1																	47.3	12
E	X	P	R	E	S	S															E
43.1	56.1	73.2	96.1	107	122	138.1														159.8	16
L	A	N	E	S																	E
57.6	70.4	89.7	106.6	121.6																76.8	16
E	N	T	R	A	N	C	E														E
32.9	47.9	64	79	95.1	114.4	133.3	147.3													126.3	16
1	M	I	L	E																	E
69.9	89.4	101.1	113.4	114.8																52.3	12,10

SPD-2

SIGN DETAIL
1:100

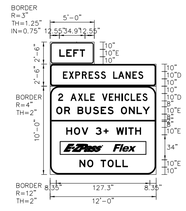

SIGN NUMBER	Text No. 18
WIDTH x HGHT.	12'-0" x 12'-6" and 5'-0" x 2'-6"
BORDER WIDTH	2" and 1.25"
CORNER RADIUS	12" and 3"
MOUNTING	Ground
BACKGROUND	TYPE: Reflective
	COLOR: Yellow/Green/White
LEGEND/BORDER	TYPE: Reflective
	COLOR: Black/White/Black

SYMBOL	ROT	X	Y	WID	HT
	0	82.1	31	31.9	10.3
	0	13.5	27	11.7	18

Panel Style: Guide Sign.ssl
Dimensions are in inches.tenths
Letter locations are panel edge to lower left corner

LETTER POSITIONS (X)

L	E	F	T																	LENGTH	SERIES/SIZE
12.6	22	31.4	40.1																	34.3	E 10
E	X	P	R	E	S	S		L	A	N	E	S									D
17.5	25.5	34.1	43.2	52.4	65.3	69	75.7	85.7	92.5	102.7	111.8	119.8								108	10
2		A	X	L	E		V	E	H	I	C	L	E	S							D
10.9	17.6	27.6	37.9	46.5	54.5	65.6	70.6	79.9	87.9	97	101	109.6	117.6	125.5						121.4	10
O	R		S	U	S	E	S		O	N	L	Y									E
8.4	19.2	27.2	37.2	47.7	58.3	69.8	79.2	86.2	96.2	107	117.6	126.6								127.3	10
H	O	V		3			W	I	T	H											E
21.9	32.5	42.8	51.9	61.9	69.8	79.8	89.8	102.4	108.2	115.6										110.7	10
N	O		T	O	L	L															E
38.8	50.4	58.7	68.7	79.1	88.9	98.3														69.9	10

SPD-2

SIGN DETAIL
1:100

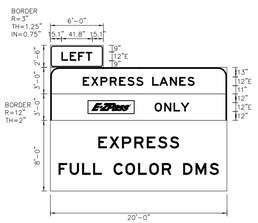

SIGN NUMBER	Text No. 14
WIDTH x HGHT.	20'-0" x 14'-0" and 6'-0" x 2'-6"
BORDER WIDTH	2" and 1.25"
CORNER RADIUS	12" and 3"
MOUNTING	Overhead
BACKGROUND	TYPE: Reflective
	COLOR: Yellow/Green/White
LEGEND/BORDER	TYPE: Reflective
	COLOR: Black/White/Black

SYMBOL	ROT	X	Y	WID	HT
	0	59	9	63	18

Panel Style: Guide Sign.ssl
Dimensions are in inches.tenths
Letter locations are panel edge to lower left corner

LETTER POSITIONS (X)

L	E	F	T																	LENGTH	SERIES/SIZE
15.1	26.4	37.7	48.1																	47.8	E 12
E	X	P	R	E	S	S	L	A	N	E	S										E
44	55.3	68.1	80.8	93.4	104.7	116.8	128.4	138.4	148	162.5	173.1	186.4								162	12
O	N	L	Y																		E
141.7	154.8	167.4	177																	47.3	12

SPD-2

SIGN DETAIL
1:100

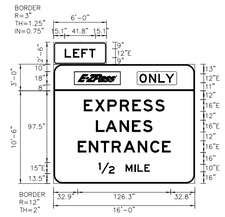

SIGN NUMBER	Text No. 13
WIDTH x HGHT.	16'-0" x 13'-6" and 6'-0" x 2'-6"
BORDER WIDTH	2" and 1.25"
CORNER RADIUS	12" and 3"
MOUNTING	Overhead
BACKGROUND	TYPE: Reflective
	COLOR: Yellow/Purple/Green
LEGEND/BORDER	TYPE: Reflective
	COLOR: Black/White/White

SYMBOL	ROT	X	Y	WID	HT
	0	28	8	63	18

Panel Style: Guide Sign.ssl
Dimensions are in inches.tenths
Letter locations are panel edge to lower left corner

LETTER POSITIONS (X)

L	E	F	T																	LENGTH	SERIES/SIZE
15.1	26.4	37.7	48.1																	47.8	E 12
O	N	L	Y																		E
116.8	129.8	142.4	152.1																	47.3	12
E	X	P	R	E	S	S															E
41.1	56.1	73.2	96.1	107	122	138.1														159.8	16
L	A	N	E	S																	E
57.6	70.4	89.7	106.6	121.6																76.8	16
E	N	T	R	A	N	C	E														E
32.9	47.9	64	79	95.1	114.4	133.3	147.3													126.3	16
1	M	I	L	E																	E
69	88	109.7	114	123.4																88.8	10,10

AFC PLANS

PROJECT	SHEET NO.
0095-076-299	16(2BII)

LIMITED ACCESS HIGHWAY

By Resolution of the Highway Commission dated October 4, 1956.
By Resolution of the Highway Commission dated January 18, 1973.
By Resolution of the Commonwealth Transportation Board dated April 19, 2022

PROJECT MANAGER Rimpal Shah, P.E. (703) 259-2362 (NOVA District) _____
SURVEYED BY, DATE H&B Surveying and Mapping, LLC (804) 330-3781, 03/09/2021
DESIGN BY Whitman, Requardt, & Associates, LLP (804) 212-8700 _____
SUBSURFACE UTILITY BY, DATE Accumark, Inc. (804) 550-7740, 07/07/2021

COMMONWEALTH OF VIRGINIA
JEFFREY D. CHENG
Lic. No. 051900
PROFESSIONAL ENGINEER

Jeffrey D Cheng
2022.07.20 16:11:25 -04'00'

Whitman, Requardt & Associates
Baltimore, Maryland
TRAFFIC ENGINEER

REVISED	STATE	STATE ROUTE	STATE PROJECT	SHEET NO.
	VA.	95	0095-076-299,C-501	16(2B2)

DESIGN FEATURES RELATING TO CONSTRUCTION OR TO REGULATION AND CONTROL OF TRAFFIC MAY BE SUBJECT TO CHANGE AS DEEMED NECESSARY BY THE DEPARTMENT

SPD-2

SIGN DETAIL
1:100

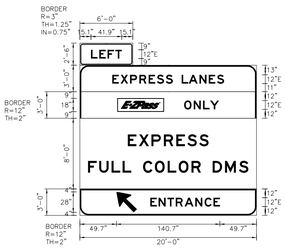

SIGN NUMBER	Text No. 35
WIDTH x HGHT.	20'-0" x 17'-0" and 6'-0" x 2'-6
BORDER WIDTH	2" and 1.25"
CORNER RADIUS	12" and 3"
MOUNTING	Overhead
BACKGROUND	TYPE: Reflective
	COLOR: YellowGreenWhiteGreen
LEGEND/BORDER	TYPE: Reflective
	COLOR: BlackWhiteBlackWhite

SYMBOL	ROT	X	Y	WID	HT
	0	51	9	63	18

Panel Style: Guide Sign.ssl
Dimensions are in inches.tenths
Letter locations are panel edge to lower left corner

LETTER POSITIONS (X)

L	E	F	T																LENGTH	SERIES/SIZE
10.1	28.4	37.7	48.1																47.9	E 12
E	X	P	R	E	S	S		L	A	N	E	S								E
44	53.3	68.1	85.8	93.4	104.7	116.8	126.4	138.4	148	162.5	175.1	186.4							152	10
O	N	L	Y																	E
140.7	154.7	167.4	177																47.3	10
E	N	T	R	A	N	C	E													E
18.7	108.9	119	130.3	142.3	156.8	168.5	181.5												94.7	12

SPD-2

SIGN DETAIL
1:50

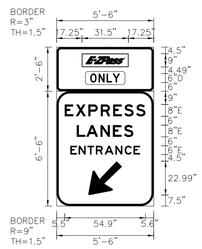

SIGN NUMBER	Text No. 6
WIDTH x HGHT.	5'-6" x 9'-0"
BORDER WIDTH	1.5"
CORNER RADIUS	3" and 9"
MOUNTING	Ground
BACKGROUND	TYPE: Reflective
	COLOR: PurpleGreen
LEGEND/BORDER	TYPE: Reflective
	COLOR: WhiteWhite

SYMBOL	ROT	X	Y	WID	HT
	0	17.2	16.5	31.5	9
ARMS	225	21.5	7.5	19.8	29.8

Panel Style: Guide Sign.ssl
Dimensions are in inches.tenths
Letter locations are panel edge to lower left corner

LETTER POSITIONS (X)

O	N	L	Y																LENGTH	SERIES/SIZE
22.9	39.5	54	58.1																20.2	O 6
E	X	P	R	E	S	S														E
5.5	10	21.6	30	38.4	48	54													54.9	8
L	A	N	E	S																E
13.7	20.1	29.8	38.2	45.8															38.4	8
E	N	T	R	A	N	C	E													E
9.3	15	21	26.7	32.7	39.8	46.2	52.3												47.3	6

SPD-2

SIGN DETAIL
1:50

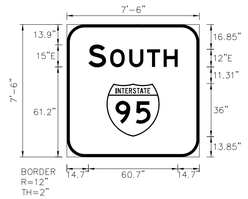

SIGN NUMBER	Text No. 9
WIDTH x HGHT.	7'-6" x 7'-6"
BORDER WIDTH	2"
CORNER RADIUS	12"
MOUNTING	Overhead
BACKGROUND	TYPE: Reflective
	COLOR: Green
LEGEND/BORDER	TYPE: Reflective
	COLOR: White

SYMBOL	ROT	X	Y	WID	HT
95	0	27	10.8	36	36

Panel Style: south.ssl
Dimensions are in inches.tenths
Letter locations are panel edge to lower left corner

LETTER POSITIONS (X)

S	O	U	T	H															LENGTH	SERIES/SIZE
14.7	29.4	42.4	54.5	65.8															60.7	E 15.12

SPD-2

SIGN DETAIL
1:100

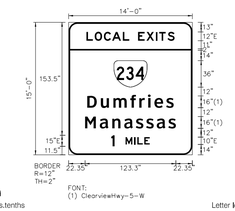

FONT:
(1) ClearviewHwy-5-W

SIGN NUMBER	Text No. 8
WIDTH x HGHT.	14'-0" x 15'-0"
BORDER WIDTH	2"
CORNER RADIUS	12"
MOUNTING	Overhead
BACKGROUND	TYPE: Reflective
	COLOR: Green
LEGEND/BORDER	TYPE: Reflective
	COLOR: White

SYMBOL	ROT	X	Y	WID	HT
	0	61.3	90	45	36

Panel Style: Guide Sign.ssl
Dimensions are in inches.tenths
Letter locations are panel edge to lower left corner

LETTER POSITIONS (X)

L	O	C	A	L		E	X	I	T	S									LENGTH	SERIES/SIZE
24.1	35.4	47.8	59.1	73.5	82.3	94.3	105.6	118.5	129	134.3									116.7	E 12
2	3	4																		C
65.4	78.3	91.3																	36.3	18
D	u	m	f	r	i	e	s													ClarviewHwy-5-M
25.3	43.8	60.8	83.7	96	107.7	116.5	132.5												117.4	19.5
M	a	n	a	s	s	a	s													ClarviewHwy-5-M
22.3	42.3	59.3	75.5	91.2	105.3	119.7	135.4												123.3	19.5
1	M	I	L	E																E
57.9	77.3	89.1	99.4	102.8															53.2	15.10

AFC PLANS

	PROJECT	SHEET NO.
	0095-076-299	16(2B2)

LIMITED ACCESS HIGHWAY

By Resolution of the Highway Commission dated October 4, 1956.
By Resolution of the Highway Commission dated January 18, 1973.
By Resolution of the Commonwealth Transportation Board dated April 19, 2022

PROJECT MANAGER Rimpal Shah, P.E. (703) 259-2362 (NOVA District) _____
SURVEYED BY, DATE H&B Surveying and Mapping, LLC (804) 330-3781, 03/09/2021
DESIGN BY Whitman, Requardt, & Associates, LLP (804) 212-8700 _____
SUBSURFACE UTILITY BY, DATE Accumark, Inc. (804) 550-7740, 07/07/2021

COMMONWEALTH OF VIRGINIA
JEFFREY D. CHENG
Lic. No. 051900
PROFESSIONAL ENGINEER

Jeffrey D Cheng
2022.07.20 16:11:47 -04'00'

Whitman, Requardt & Associates
Baltimore, Maryland
TRAFFIC ENGINEER

REVISED	STATE	STATE ROUTE	STATE PROJECT	SHEET NO.
	VA.	95	0095-076-299,C-501	16(2B3)

DESIGN FEATURES RELATING TO CONSTRUCTION OR TO REGULATION AND CONTROL OF TRAFFIC MAY BE SUBJECT TO CHANGE AS DEEMED NECESSARY BY THE DEPARTMENT

SPD-2

SIGN DETAIL
1:100

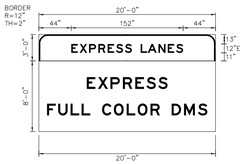

SIGN NUMBER	Text No. 3
WIDTH x HGHT.	20'-0" x 11'-0"
BORDER WIDTH	2"
CORNER RADIUS	12"
MOUNTING	Overhead
BACKGROUND	TYPE: Reflective
	COLOR: Green
LEGEND/BORDER	TYPE: Reflective
	COLOR: White

SYMBOL	ROT	X	Y	WID	HT

Panel Style: Guide Sign.ssl
Dimensions are in inches.tenths
Letter locations are panel edge to lower left corner

LETTER POSITIONS (X)

E	X	P	R	E	S	S		L	A	N	E	S												LENGTH	SERIES/SIZE
44	55.3	68.1	80.8	93.4	104.7	116.8	128.4	138.4	148	162.3	173.1	186.4												192	E 12

SPD-2

SIGN DETAIL
1:100

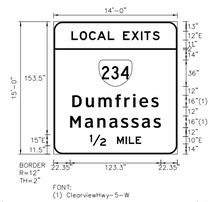

SIGN NUMBER	Text No. 2
WIDTH x HGHT.	14'-0" x 15'-0"
BORDER WIDTH	2"
CORNER RADIUS	12"
MOUNTING	Overhead
BACKGROUND	TYPE: Reflective
	COLOR: Green
LEGEND/BORDER	TYPE: Reflective
	COLOR: White

SYMBOL	ROT	X	Y	WID	HT
	0	81.3	92	43.2	36

Panel Style: Guide Sign.ssl
Dimensions are in inches.tenths
Letter locations are panel edge to lower left corner

LETTER POSITIONS (X)

L	O	C	A	L		E	X	I	T	S														LENGTH	SERIES/SIZE
24.1	36.4	47.8	59.1	73.5	82.3	94.3	105.6	116.5	133	134.3														193.7	E 12
D	o	n	'	r	i	e	s																		Dumfries Hwy-5-W
25.3	42.8	60.8	83.7	96	107.7	116.5	132.5																	197.4	1893
M	a	n	a	s	s	a	s																		Dumfries Hwy-5-W
22.3	42.3	59.5	75.3	89.2	105.3	118.7	130.4																	133.3	1893
12	M	I	L	E																					E
46.1	86.1	97.9	102.2	113.6																				159.8	10.10

SIGN DETAIL
1:50

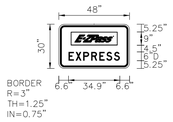

SIGN NUMBER	Text No. 1
WIDTH x HGHT.	4'-0" x 2'-6"
BORDER WIDTH	1.25"
CORNER RADIUS	3"
MOUNTING	Ground
BACKGROUND	TYPE: Reflective
	COLOR: Purple
LEGEND/BORDER	TYPE: Reflective
	COLOR: White

SYMBOL	ROT	X	Y	WID	HT
	0	8.2	13.8	31.5	9

Panel Style: Guide Sign.ssl
Dimensions are in inches.tenths
Letter locations are panel edge to lower left corner

LETTER POSITIONS (X)

E	X	P	R	E	S	S																		LENGTH	SERIES/SIZE
6.6	11.3	16.5	22	27.5	32.2	37.4																		34.9	D 6

SPD-2

SIGN DETAIL
1:100

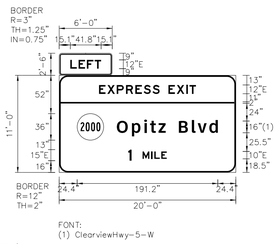

SIGN NUMBER	Text No. 4
WIDTH x HGHT.	20'-0" x 11'-0" and 6'-0" x 2'-6"
BORDER WIDTH	2" and 1.25"
CORNER RADIUS	12" and 3"
MOUNTING	Overhead
BACKGROUND	TYPE: Reflective
	COLOR: YellowGreen
LEGEND/BORDER	TYPE: Reflective
	COLOR: BlackWhite

SYMBOL	ROT	X	Y	WID	HT
	0	24.4	44	36	36

Panel Style: Guide Sign.ssl
Dimensions are in inches.tenths
Letter locations are panel edge to lower left corner

LETTER POSITIONS (X)

L	E	F	T																					LENGTH	SERIES/SIZE
15.1	26.4	37.7	48.1																					41.9	E 12
E	X	P	R	E	S	S		E	X	I	T														E
54.1	65.4	76.2	90.9	103.5	114.8	126.9	136.4	148.4	159.7	172.5	177.1													138.8	12
O	p	i	t	z		B	l	v	d																Opitz Blvd
78.4	98.9	115.6	125.5	135	144.8	162.7	180.3	198.3	204															137.2	1893
1	M	I	L	E																					E
80.9	110.3	125.1	130.4	138.8																				52.2	10.10

AFC PLANS

PROJECT	SHEET NO.
0095-076-299	16(2B3)

LIMITED ACCESS HIGHWAY

By Resolution of the Highway Commission dated October 4, 1956.
By Resolution of the Highway Commission dated January 18, 1973.
By Resolution of the Commonwealth Transportation Board dated April 19, 2022

PROJECT MANAGER Rimpal Shah, P.E. (703) 259-2362 (NOVA District) _____
SURVEYED BY, DATE H&B Surveying and Mapping, LLC (804) 330-3781, 03/09/2021
DESIGN BY Whitman, Requardt, & Associates, LLP (804) 212-8700 _____
SUBSURFACE UTILITY BY, DATE Accumark, Inc. (804) 550-7740, 07/07/2021

COMMONWEALTH OF VIRGINIA
JEFFREY D. CHENG
Lic. No. 051900
PROFESSIONAL ENGINEER

Jeffrey D Cheng
2022.07.20 16:12:09 -04'00'

Whitman, Requardt & Associates
Baltimore, Maryland
TRAFFIC ENGINEER

REVISED	STATE	STATE ROUTE	STATE PROJECT	SHEET NO.
	VA.	95	0095-076-299,C-501	16(2B4)

DESIGN FEATURES RELATING TO CONSTRUCTION OR TO REGULATION AND CONTROL OF TRAFFIC MAY BE SUBJECT TO CHANGE AS DEEMED NECESSARY BY THE DEPARTMENT

SPD-2

SIGN DETAIL
1:100

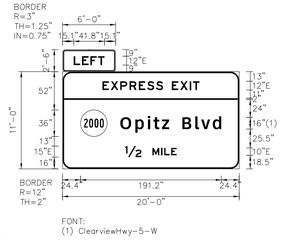

SIGN NUMBER	Text No. 11	
WIDTH x HGHT.	20'-0" x 11'-0" and 6'-0" x 2'-6"	
BORDER WIDTH	2" and 1.25"	
CORNER RADIUS	12" and 3"	
MOUNTING	Overhead	
BACKGROUND	TYPE:	Reflective
	COLOR:	Yellow/Green
LEGEND/BORDER	TYPE:	Reflective
	COLOR:	Black/White

SYMBOL	ROT	X	Y	WID	HT
	0	24.4	44	36	36

Panel Style: Guide Sign.ssl
Dimensions are in inches.tenths
Letter locations are panel edge to lower left corner

LETTER POSITIONS (X)

L	E	F	T						E	H	I	T												LENGTH	SERIES/SIZE
15.1	28.4	37.7	48.1																					47.8	E 12
E	X	P	R	E	S	S			E	X	I	T													E
54.1	65.4	78.2	96.9	103.5	114.3	125.9	136.4	148.4	159.7	172.6	177.7													179.8	12
O	p	i	t	z		B	l	v	d																Clarendon-5-R
78.4	96.9	115.6	123.5	135	144.9	162.7	180.3	198.3	204															137.2	16.10
12	W	I	L	E																					E
85.1	122.1	133.9	138.2	147.6																				69.8	15.10

SPD-2

SIGN DETAIL
1:100

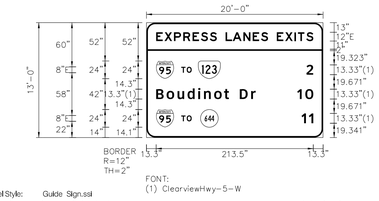

SIGN NUMBER	Text No. 12	
WIDTH x HGHT.	20'-0" x 13'-0"	
BORDER WIDTH	2"	
CORNER RADIUS	12"	
MOUNTING	Overhead	
BACKGROUND	TYPE:	Reflective
	COLOR:	Green
LEGEND/BORDER	TYPE:	Reflective
	COLOR:	White

SYMBOL	ROT	X	Y	WID	HT
M_1	0	13.3	80	24	24
M2A1	0	70.4	80	30	24
M_1	0	13.3	14	24	24
"	0	73.5	14	24	24

Panel Style: Guide Sign.ssl
Dimensions are in inches.tenths
Letter locations are panel edge to lower left corner

LETTER POSITIONS (X)

E	X	P	R	E	S	S		L	A	N	E	S		E	X	I	T	S			LENGTH	SERIES/SIZE
13.3	24.6	37.4	50	62.7	74	86	95.6	107.6	117.2	130.7	144.4	156.6	165.2	177.2	188.8	201.3	215.9	227.2			233.5	E 12
T	O																					E
47.3	54.8																				141	8
2																						Clarendon-5-M
217.4																					9.2	13.3
B	o	u	d	i	n	o	t		D	r												Clarendon-5-M
13.3	27.4	42.2	55.9	71.3	78.2	92	103.5	117.1	126.9	142.3											135.2	13.3/10.8
1	0																					Clarendon-5-M
215	25.9																				21.8	13.3
T	O																					E
47.3	54.8																				141	8
1	1																					Clarendon-5-M
210.7	220.8																				16	13.3

SPD-2

SIGN DETAIL
1:100

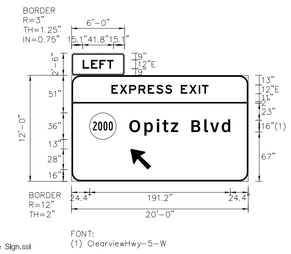

SIGN NUMBER	Text, No. 15	
WIDTH x HGHT.	20'-0" x 12'-0" and 6'-0" x 2'-6"	
BORDER WIDTH	2" and 1.25"	
CORNER RADIUS	12" and 3"	
MOUNTING	Overhead	
BACKGROUND	TYPE:	Reflective
	COLOR:	Yellow/Green
LEGEND/BORDER	TYPE:	Reflective
	COLOR:	Black/White

SYMBOL	ROT	X	Y	WID	HT
	0	24.4	57	36	36
ARR3	135	80	98	22.9	36

Panel Style: Guide Sign.ssl
Dimensions are in inches.tenths
Letter locations are panel edge to lower left corner

LETTER POSITIONS (X)

L	E	F	T						E	H	I	T												LENGTH	SERIES/SIZE
15.1	28.4	37.7	48.1																					47.8	E 12
E	X	P	R	E	S	S			E	X	I	T													E
54.1	65.4	78.2	96.9	103.5	114.3	125.9	136.4	148.4	159.7	172.5	177.7													179.8	12
O	p	i	t	z		B	l	v	d																Clarendon-5-R
78.4	96.9	115.6	123.5	135	144.9	162.7	180.3	198.3	204															137.2	16.10

SPD-2

SIGN DETAIL
1:100

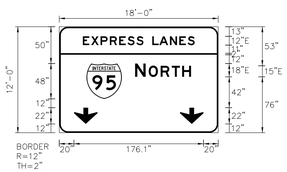

SIGN NUMBER	Text No. 16	
WIDTH x HGHT.	18'-0" x 12'-0"	
BORDER WIDTH	2"	
CORNER RADIUS	12"	
MOUNTING	Overhead	
BACKGROUND	TYPE:	Reflective
	COLOR:	Green
LEGEND/BORDER	TYPE:	Reflective
	COLOR:	White

SYMBOL	ROT	X	Y	WID	HT
M_1	0	97	46	48	48
ARDIN	0	30	12	30.1	22
ARDIN	0	164	12	30.1	22

Panel Style: Guide Sign.ssl
Dimensions are in inches.tenths
Letter locations are panel edge to lower left corner

LETTER POSITIONS (X)

E	X	P	R	E	S	S		L	A	N	E	S									LENGTH	SERIES/SIZE
32	43.3	56.1	68.8	81.4	92.7	104.8	114.4	125.4	136	150.5	163.1	174.4									152	E 12
N	O	R	T	H																		E
103	121.6	137.8	152.9	167																	74	16.15

AFC PLANS

PROJECT	SHEET NO.
0095-076-299	16(2B4)

Cell Revised 12/1/12

LIMITED ACCESS HIGHWAY

By Resolution of the Highway Commission dated October 4, 1956.
By Resolution of the Highway Commission dated January 18, 1973.
By Resolution of the Commonwealth Transportation Board dated April 19, 2022

PROJECT MANAGER Rimpal Shah, P.E. (703) 259-2362 (NOVA District) _____
SURVEYED BY, DATE H&B Surveying and Mapping, LLC (804) 330-3781, 03/09/2021
DESIGN BY Whitman, Requardt, & Associates, LLP (804) 212-8700 _____
SUBSURFACE UTILITY BY, DATE Accutark, Inc. (804) 550-7740, 07/07/2021

COMMONWEALTH OF VIRGINIA
JEFFREY D. CHENG
Lic. No. 051900
PROFESSIONAL ENGINEER

Jeffrey D Cheng
2022.07.20 16:12:30 -04'00'

Whitman, Requardt & Associates
Baltimore, Maryland
TRAFFIC ENGINEER

REVISED	STATE	STATE ROUTE	STATE PROJECT	SHEET NO.
	VA.	95	0095-076-299,C-501	16(2B5)

DESIGN FEATURES RELATING TO CONSTRUCTION OR TO REGULATION AND CONTROL OF TRAFFIC MAY BE SUBJECT TO CHANGE AS DEEMED NECESSARY BY THE DEPARTMENT

SPD-2

SIGN DETAIL
1:50

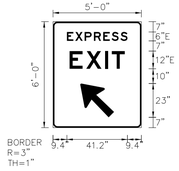

SIGN NUMBER	Text No. 17	
WIDTH x HGHT.	5'-0" x 6'-0"	
BORDER WIDTH	1"	
CORNER RADIUS	3"	
MOUNTING	Ground	
BACKGROUND	TYPE:	Reflective
	COLOR:	Green
LEGEND/BORDER	TYPE:	Reflective
	COLOR:	White

SYMBOL	ROT	X	Y	WID	HT
ARRO	135	18.5	7	18.8	28.8

Panel Style: Guide Sign.ssl
Dimensions are in inches.tenths

Letter locations are panel edge to lower left corner

LETTER POSITIONS (X)

																						LENGTH	SERIES/SIZE
E	X	P	R	E	S	S																	E
9.4	15.1	21.5	27.8	34.1	39.8	45.8																47.2	6
E	X	I	T																				E
11.3	22.8	30.4	38.9																			37.5	12

SPD-2

SIGN DETAIL
1:100

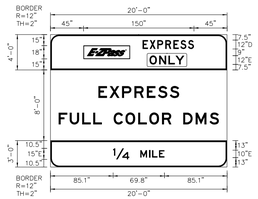

SIGN NUMBER	Text No. 19	
WIDTH x HGHT.	20'-0" x 15'-0"	
BORDER WIDTH	2"	
CORNER RADIUS	12"	
MOUNTING	Overhead	
BACKGROUND	TYPE:	Reflective
	COLOR:	Purple/Green
LEGEND/BORDER	TYPE:	Reflective
	COLOR:	White/White

SYMBOL	ROT	X	Y	WID	HT
	270	49.9	18.7	106	53.3
	270	49.9	18.7	106	53.3
	0	45	15	63	18
	0	45	15	63	18

Panel Style: Guide Sign.ssl
Dimensions are in inches.tenths

Letter locations are panel edge to lower left corner

LETTER POSITIONS (X)

																						LENGTH	SERIES/SIZE
E	X	P	R	E	S	S																	D
125.3	134.8	141.2	156.1	167	176.6	187																189.3	12
O	N	L	Y																				E
134.7	147.7	160.3	170																			173	12
N	M	I	L	E																			E
181	201	220.9	238.2	247.8																		259.8	15.10

SPD-2

SIGN DETAIL
1:50

SIGN NUMBER	Text No. 21	
WIDTH x HGHT.	13'-0" x 8'-0"	
BORDER WIDTH	2"	
CORNER RADIUS	12"	
MOUNTING	Ground	
BACKGROUND	TYPE:	Reflective
	COLOR:	Blue
LEGEND/BORDER	TYPE:	Reflective
	COLOR:	White

SYMBOL	ROT	X	Y	WID	HT
	0	20.9	16.9	26.8	26.8

Panel Style: Guide Sign.ssl
Dimensions are in inches.tenths

Letter locations are panel edge to lower left corner

LETTER POSITIONS (X)

																						LENGTH	SERIES/SIZE
C	o	m	m	u	t	e	r																E
67.5	76	83.7	95.3	106.8	114.2	120	127.6															133.8	96
I	n	f	o	r	m	a	t	i	o	n													E
63.3	67.9	75.4	80.4	88.1	93.9	104.8	112.1	118.7	122.6	130.3												72	96
8	0	0	-	7	4	5	-	8	1	0	E												E
20.6	30.7	41	51.9	62	70.7	81.9	92.5	102.8	113.2	117.3	128											114.7	10
C	O	M	M	U	T	E	R		C	O	N	N	E	C	T	I	O	N	S				D
10.5	17.4	24.9	33	41	47.9	54.3	60.7	66.1	74.1	81	88.5	95.8	103.3	109.5	115.9	122.2	125.4	132.9	140.2			105.1	8

SPD-2

SIGN DETAIL
1:50

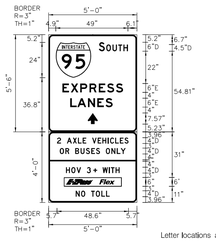

SIGN NUMBER	Text No. 22	
WIDTH x HGHT.	5'-0" x 9'-6"	
BORDER WIDTH	1"	
CORNER RADIUS	3"	
MOUNTING	Ground	
BACKGROUND	TYPE:	Reflective
	COLOR:	Green/White
LEGEND/BORDER	TYPE:	Reflective
	COLOR:	White/Black

SYMBOL	ROT	X	Y	WID	HT
M_1	0	4.9	36.8	24	24
	0	34.4	12.3	10.7	3.4
	0	10.5	11	39	6
	0	10.5	11	39	6
	0	10.5	11	39	6

Panel Style: Guide Sign.ssl
Dimensions are in inches.tenths

Letter locations are panel edge to lower left corner

LETTER POSITIONS (X)

																						LENGTH	SERIES/SIZE
S	O	U	T	H																			D
34.2	39.2	43.4	47.3	52.9																		55.7	6.4.5
E	X	P	R	E	S	S																	E
9.4	15.1	21.5	27.8	34.1	39.8	45.8																43.2	6
L	A	N	E	S																			E
14.7	19.5	26.8	33.1	38.7																		38.8	6
2		A	X	L	E		V	E	H	I	C	L	E	S									D
5.7	8.4	12.4	16.5	20	23.2	25.6	29.6	33.4	36.5	40.2	41.8	45.2	48.4	51.6								48.6	4
O	R		B	U	S	E	S		O	N	L	Y											D
7.6	11.4	14.1	18.1	21.7	25.4	29	32.2	34.9	38.9	42.7	46.3	49										44.8	6
H	O	V		S			W	I	T	H													D
11.8	15.5	19	22	26	28.7	32.7	36.7	41	42.4	45.5												36.4	4
N	O		T	O	L	L																	D
18.4	22.1	24.9	28.9	32.1	35.9	38.1																23.1	4

AFC PLANS

	PROJECT	SHEET NO.
	0095-076-299	16(2B5)

LIMITED ACCESS HIGHWAY

By Resolution of the Highway Commission dated October 4, 1956.
By Resolution of the Highway Commission dated January 18, 1973.
By Resolution of the Commonwealth Transportation Board dated April 19, 2022

PROJECT MANAGER Rimpal Shah, P.E. (703) 259-2362 (NOVA District) _____
SURVEYED BY, DATE H&B Surveying and Mapping, LLC (804) 330-3781, 03/09/2021
DESIGN BY Whitman, Requardt, & Associates, LLP (804) 212-8700 _____
SUBSURFACE UTILITY BY, DATE Accumark, Inc. (804) 550-7740, 07/07/2021

COMMONWEALTH OF VIRGINIA
JEFFREY D. CHENG
Lic. No. 051900
PROFESSIONAL ENGINEER

Jeffrey D Cheng
2022.07.20 16:12:55 -04'00'

Whitman, Requardt & Associates
Baltimore, Maryland
TRAFFIC ENGINEER

REVISED	STATE	STATE ROUTE	STATE PROJECT	SHEET NO.
	VA.	95	0095-076-299,C-501	I6(2B6)

DESIGN FEATURES RELATING TO CONSTRUCTION OR TO REGULATION AND CONTROL OF TRAFFIC MAY BE SUBJECT TO CHANGE AS DEEMED NECESSARY BY THE DEPARTMENT

SIGN DETAIL
1:50

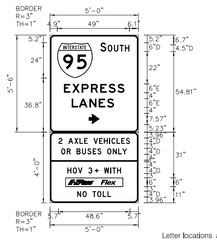

SIGN NUMBER	Text No. 24
WIDTH x HGHT.	5'-0" x 9'-6"
BORDER WIDTH	1"
CORNER RADIUS	3"
MOUNTING	Ground
BACKGROUND	TYPE: Reflective
	COLOR: Green/White
LEGEND/BORDER	TYPE: Reflective
	COLOR: White/Black

SYMBOL	ROT	X	Y	WID	HT
M_1	0	4.9	36.8	24	24
	0	54.4	12.3	10.8	3.4
	0	10.5	11	39	6
	0	10.5	11	39	6
	0	10.5	11	39	6

Panel Style: Guide Sign.ssl
Dimensions are in inches.tenths
Letter locations are panel edge to lower left corner

LETTER POSITIONS (X)

S	O	U	T	H															LENGTH	SERIES/SIZE
34.1	39.2	43.4	47.3	50.9															19.8	D 6.45
E	X	P	R	E	S	S														E
8.4	15.1	21.5	27.8	34.1	39.8	45.8													47.2	6
L	A	N	E	S																E
14.7	19.5	26.8	33.1	38.7															28.8	6
2		A	X	L	E		V	E	H	I	C	L	E	S						D
5.7	8.4	12.4	16.5	20	23.2	25.6	29.8	33.4	36.5	40.2	41.8	45.2	48.4	51.6					48.5	4
O	R		B	U	S	E	S		O	N	L	Y								D
7.6	11.4	14.3	18.1	21.7	25.4	29	33.2	34.9	38.9	42.7	46.3	49							44.8	4
H	O	V		3			W	I	T	H										D
11.8	15.5	19	22	26	28.7	32.7	36.7	41	42.3	45.5									36.4	4
N	O		T	O	L	L														D
10.4	22.1	24.3	28.9	32.1	35.9	39													23.1	4

SPD-2

SIGN DETAIL
1:100

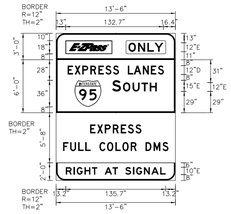

SIGN NUMBER	Text No. 25
WIDTH x HGHT.	13'-6" x 16'-8"
BORDER WIDTH	2"
CORNER RADIUS	12"
MOUNTING	Overhead
BACKGROUND	TYPE: Reflective
	COLOR: Purple/Green/Yellow
LEGEND/BORDER	TYPE: Reflective
	COLOR: White/White/Black

SYMBOL	ROT	X	Y	WID	HT
	0	10	8	62	18
M_1	0	25.2	8	36	36

Panel Style: Guide Sign.ssl
Dimensions are in inches.tenths
Letter locations are panel edge to lower left corner

LETTER POSITIONS (X)

O	N	L	Y																LENGTH	SERIES/SIZE
38.4	77.4	124	133.7																47.3	E 12
E	X	P	R	E	S	S		L	A	N	E	S								D
15.6	25.2	35.6	45.3	57.4	67	77.3	85.4	97.4	106.5	117.8	128.8	138.2							132.7	12
S	O	U	T	H																E
76.1	90.9	103.9	115.9	127.2															82.7	15.12
R	I	G	H	T		A	T		S	I	G	N	A	L						E
13.2	23.7	28	38.5	48.6	55.9	65.9	70.6	84	94	104.5	108.8	118.3	129.4	141.4					136.6	10

SPD-2

SIGN DETAIL
1:100

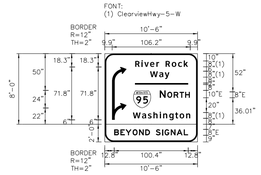

SIGN NUMBER	Text No. 27
WIDTH x HGHT.	10'-6" x 10'-0"
BORDER WIDTH	2"
CORNER RADIUS	12"
MOUNTING	Ground
BACKGROUND	TYPE: Reflective
	COLOR: Green/Yellow
LEGEND/BORDER	TYPE: Reflective
	COLOR: White/Black

SYMBOL	ROT	X	Y	WID	HT
M_1	0	28.7	22	24	24
	0	9.9	6	19.7	11.8
	0	9.9	6	19.7	11.8

Panel Style: Guide Sign.ssl
Dimensions are in inches.tenths
Letter locations are panel edge to lower left corner

LETTER POSITIONS (X)

R	I	V	E	R		R	O	C	K										LENGTH	SERIES/SIZE
41.3	48.9	53.8	61.5	70.1	73.8	82.6	91	99.6	107.3										71.6	Clarview Hwy-5-W 98.5
W	A	Y																		Clarview Hwy-5-W
61.5	74	81.5																	26.2	98.5
N	O	R	T	H																E
74.7	85	93.6	101.7	109.2															48.9	10.8
W	A	S	H	I	N	G	T	O	N											Clarview Hwy-5-W
38.1	52.6	58.4	66.1	74.8	79.3	87.6	95.8	101.7	110.6										79	98.5
B	E	Y	O	N	D		S	I	G	N	A	L								E
12.8	21.2	28.2	37.8	46.5	54.9	61.3	69.3	77.8	81.2	89.6	97.7	107.3							100.4	8

SPD-2

SIGN DETAIL
1:50

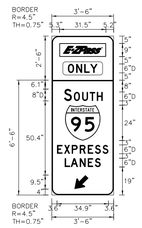

SIGN NUMBER	Text No. 28
WIDTH x HGHT.	3'-6" x 9'-0"
BORDER WIDTH	0.75"
CORNER RADIUS	4.5"
MOUNTING	Ground
BACKGROUND	TYPE: Reflective
	COLOR: Purple/Green
LEGEND/BORDER	TYPE: Reflective
	COLOR: White/White

SYMBOL	ROT	X	Y	WID	HT
	0	5.2	16	31.5	9
M_1	0	9	37	24	24
ARP	315	15.4	4	8	12

Panel Style: Guide Sign.ssl
Dimensions are in inches.tenths
Letter locations are panel edge to lower left corner

LETTER POSITIONS (X)

O	N	L	Y																LENGTH	SERIES/SIZE
10.9	16.5	22	28.1																20.2	D 6
S	O	U	T	H																D
8.2	14.9	20.6	25.8	31.5															26.3	8.8
E	X	P	R	E	S	S														D
3.6	8.3	13.5	19	24.4	29.2	34.4													34.9	6
L	A	N	E	S																D
8.8	12.8	19	24.4	29.2															24.5	6

AFC PLANS

	PROJECT	SHEET NO.
	0095-076-299	I6(2B6)

LIMITED ACCESS HIGHWAY

By Resolution of the Highway Commission dated October 4, 1956.
By Resolution of the Highway Commission dated January 18, 1973.
By Resolution of the Commonwealth Transportation Board dated April 19, 2022

PROJECT MANAGER Rimpal Shah, P.E. (703) 259-2362 (NOVA District)
SURVEYED BY, DATE H&B Surveying and Mapping, LLC (804) 330-3781, 03/09/2021
DESIGN BY Whitman, Requardt, & Associates, LLP (804) 212-8700
SUBSURFACE UTILITY BY, DATE Accumark, Inc. (804) 550-7740, 07/07/2021

REVISED	STATE	STATE ROUTE	STATE PROJECT	SHEET NO.
	VA.	95	0095-076-299,C-501	16(2B7)

COMMONWEALTH OF VIRGINIA
JEFFREY D. CHENG
Lic. No. 051900
PROFESSIONAL ENGINEER

Jeffrey D Cheng
2022.07.20 16:13:17 -04'00'

Whitman, Requardt & Associates
Baltimore, Maryland
TRAFFIC ENGINEER

DESIGN FEATURES RELATING TO CONSTRUCTION OR TO REGULATION AND CONTROL OF TRAFFIC MAY BE SUBJECT TO CHANGE AS DEEMED NECESSARY BY THE DEPARTMENT

SIGN DETAIL
1:50

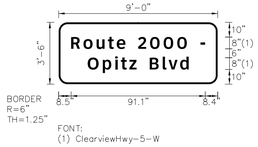

SIGN NUMBER	Text No. 42
WIDTH x HGHT.	9'-0" x 3'-6"
BORDER WIDTH	1.25"
CORNER RADIUS	6"
MOUNTING	Ground
BACKGROUND	TYPE: Reflective
	COLOR: Green
LEGEND/BORDER	TYPE: Reflective
	COLOR: White

SYMBOL	ROT	X	Y	WID	HT

Panel Style: Guide Sign.ssl
Dimensions are in inches.tenths
Letter locations are panel edge to lower left corner

LETTER POSITIONS (X)

R	o	u	t	e		2	0	0	0		-										LENGTH	SERIES/SIZE
8.5	16.8	25.7	33.4	39.5	48.4	55.9	62.1	71.2	80.3	87.7	98.4										97.1	Clearview Hwy-5-W
O	p	i	t	z		B	l	v	d												68.8	Clearview Hwy-5-W
19.7	30	38.3	42.3	48	52.9	61.9	70.7	74.7	82.5													

SIGN DETAIL
1:25

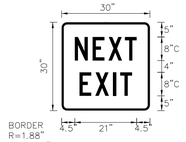

SIGN NUMBER	Text No. 32
WIDTH x HGHT.	2'-6" x 2'-6"
BORDER WIDTH	0.75"
CORNER RADIUS	1.88"
MOUNTING	Structure Tower
BACKGROUND	TYPE: Reflective
	COLOR: Blue
LEGEND/BORDER	TYPE: Reflective
	COLOR: White

SYMBOL	ROT	X	Y	WID	HT

Panel Style: Guide Sign.ssl
Dimensions are in inches.tenths
Letter locations are panel edge to lower left corner

LETTER POSITIONS (X)

N	E	X	T																		LENGTH	SERIES/SIZE
4.5	10.5	15.9	21.5																		21	C B
E	X	I	T																			C
6.1	11.4	17.5	19.9																		17.9	B

SIGN DETAIL
1:50

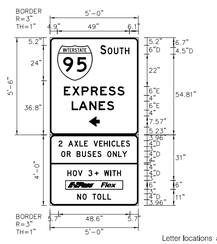

SIGN NUMBER	Text No. 23
WIDTH x HGHT.	5'-0" x 9'-6"
BORDER WIDTH	1"
CORNER RADIUS	3"
MOUNTING	Ground
BACKGROUND	TYPE: Reflective
	COLOR: Green\White
LEGEND/BORDER	TYPE: Reflective
	COLOR: White\Black

SYMBOL	ROT	X	Y	WID	HT
M_1	0	4.9	36.8	24	24
	0	34.4	12.3	10.7	3.4
	0	10.5	11	39	6
	0	10.5	11	39	6
	0	10.5	11	39	6

Panel Style: Guide Sign.ssl
Dimensions are in inches.tenths
Letter locations are panel edge to lower left corner

LETTER POSITIONS (X)

S	O	U	T	H																	LENGTH	SERIES/SIZE
34.2	39.2	43.4	47.3	50.9																	19.8	D 6.4.5
E	X	P	R	E	S	S																E
8.4	15.1	21.5	27.8	34.1	38.8	43.8															47.2	6
L	A	N	E	S																		E
14.7	19.5	26.8	33.1	38.7																	28.8	6
2		A	X	L	E		V	E	H	I	C	L	E	S								D
5.7	8.4	12.4	16.5	20	23.2	25.6	28.6	33.4	36.5	40.2	41.8	45.2	48.4	51.6							48.6	4
O	R		B	U	S	E	S		O	N	L	Y										D
7.6	11.4	14.1	18.1	21.7	25.4	29	32.2	34.9	38.9	42.7	46.3	49									44.8	4
H	O	V		3			W	I	T	H												D
11.8	15.5	19	22	25	28.7	32.7	36.7	41	42.4	45.5											38.4	4
N	O		T	O	L	L																D
18.4	22.1	24.3	28.8	32.1	35.9	38.1															23.1	4

SPD-2

SIGN DETAIL
1:100

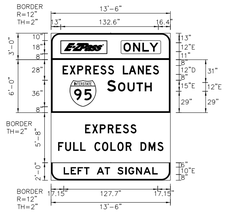

SIGN NUMBER	Text No. 31
WIDTH x HGHT.	13'-6" x 16'-8"
BORDER WIDTH	2"
CORNER RADIUS	12"
MOUNTING	Overhead
BACKGROUND	TYPE: Reflective
	COLOR: Purple\Green\Yellow
LEGEND/BORDER	TYPE: Reflective
	COLOR: White\White\Black

SYMBOL	ROT	X	Y	WID	HT
	0	0	0	93	91
M_1	0	25.2	0	36	36

Panel Style: Guide Sign.ssl
Dimensions are in inches.tenths
Letter locations are panel edge to lower left corner

LETTER POSITIONS (X)

O	N	L	Y																		LENGTH	SERIES/SIZE
38.4	111.4	124	130.7																		47.3	E 12
E	X	P	R	E	S	S		L	A	N	E	S										D
15.6	25.2	35.6	46.5	57.4	67	77.3	85.4	97.4	105.5	117.8	128.8	138.3									138.7	12
S	O	U	T	H																		E
76.1	90.9	103.9	115.9	127.2																	49.7	15.12
L	E	F	T			A	T		S	I	G	N	A	L								E
17.2	28.8	36	44.7	52	62	72.7	80.1	90.1	100.8	104.9	115.4	125.5	137.5								137.7	10

AFC PLANS

	PROJECT	SHEET NO.
	0095-076-299	16(2B7)

LIMITED ACCESS HIGHWAY

By Resolution of the Highway Commission dated October 4, 1956.
By Resolution of the Highway Commission dated January 18, 1973.
By Resolution of the Commonwealth Transportation Board dated April 19, 2022

PROJECT MANAGER Rimpal Shah, P.E. (703) 259-2362 (NOVA District)
SURVEYED BY, DATE H&B Surveying and Mapping, LLC (804) 330-3781, 03/09/2021
DESIGN BY Whitman, Requardt, & Associates, LLP (804) 212-8700
SUBSURFACE UTILITY BY, DATE Accumark, Inc. (804) 550-7740, 07/07/2021

COMMONWEALTH OF VIRGINIA
JEFFREY D. CHENG
Lic. No. 051900
PROFESSIONAL ENGINEER

Jeffrey D Cheng
2022.07.20 16:13:40 -04'00'

Whitman, Requardt & Associates
Baltimore, Maryland
TRAFFIC ENGINEER

REVISED	STATE	STATE ROUTE	STATE PROJECT	SHEET NO.
	VA.	95	0095-076-299,C-501	I6(2B8)

DESIGN FEATURES RELATING TO CONSTRUCTION OR TO REGULATION AND CONTROL OF TRAFFIC MAY BE SUBJECT TO CHANGE AS DEEMED NECESSARY BY THE DEPARTMENT

SPD-2

SIGN DETAIL
1:50

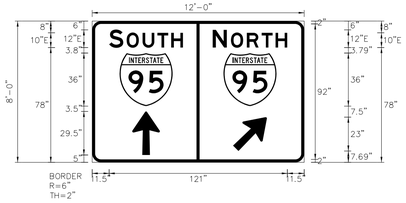

Panel Style: Guide Sign.ssl
Dimensions are in inches.tenths

Letter locations are panel edge to lower left corner

SIGN NUMBER	Text No. 34
WIDTH x HGHT.	12'-0" x 8'-0"
BORDER WIDTH	2"
CORNER RADIUS	6"
MOUNTING	Ground
BACKGROUND	TYPE: Reflective
	COLOR: Green
LEGEND/BORDER	TYPE: Reflective
	COLOR: White

SYMBOL	ROT	X	Y	WID	HT
M_1	0	18.6	38.2	36	36
M_1	0	89.2	38.2	36	36
ARMS	45	19.7	17	19.8	29.8
ARMS	90	27.2	5	19.8	29.8

LETTER POSITIONS (X)

S	O	U	T	H																		LENGTH	SERIES:SIZE
11.5	23.4	34.2	44.3	53.7																		53.1	E 10
N	O	R	T	H																			E
18.9	34.3	115.1	115.1	124.5																		32.7	10

SIGN DETAIL
1:50

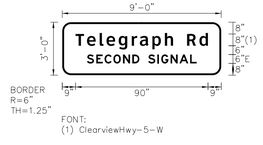

Panel Style: Guide Sign.ssl
Dimensions are in inches.tenths

Letter locations are panel edge to lower left corner

SIGN NUMBER	Text No. 33
WIDTH x HGHT.	9'-0" x 3'-0"
BORDER WIDTH	1.25"
CORNER RADIUS	6"
MOUNTING	Ground
BACKGROUND	TYPE: Reflective
	COLOR: Green
LEGEND/BORDER	TYPE: Reflective
	COLOR: White

SYMBOL	ROT	X	Y	WID	HT

LETTER POSITIONS (X)

T	e	l	e	g	r	a	p	h		R	d											LENGTH	SERIES:SIZE
9	16.8	25.4	30.1	38.4	47.2	52.7	61.2	69.8	75.3	84.3	93.2											90	ClearviewHwy-5-W 86.5
S	E	C	O	N	D		S	I	G	N	A	L											E
16.8	23.1	28.7	34.8	41.3	47.6	52.4	58.4	64.7	67.3	73.6	79.6	86.9										74.5	6

SPD-2

SIGN DETAIL
1:50

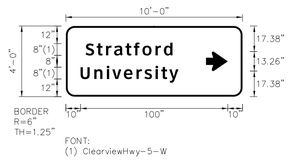

Panel Style: Guide Sign.ssl
Dimensions are in inches.tenths

Letter locations are panel edge to lower left corner

SIGN NUMBER	Text No. 29
WIDTH x HGHT.	10'-0" x 4'-0"
BORDER WIDTH	1.25"
CORNER RADIUS	6"
MOUNTING	Ground
BACKGROUND	TYPE: Reflective
	COLOR: Green
LEGEND/BORDER	TYPE: Reflective
	COLOR: White

SYMBOL	ROT	X	Y	WID	HT
	0	10.4	17.4	19.6	13.3

LETTER POSITIONS (X)

S	t	r	a	t	f	o	r	d														LENGTH	SERIES:SIZE
10.4	21	27.3	32.8	40.5	46.2	52	60.9	66.6														59	ClearviewHwy-5-W 98.5
U	n	i	v	e	r	s	i	t	y														ClearviewHwy-5-W
10	15.3	27.8	31.5	39.4	48	53.4	60.9	64.8	70.2													88.5	98.5

SPD-2

SIGN DETAIL
1:100

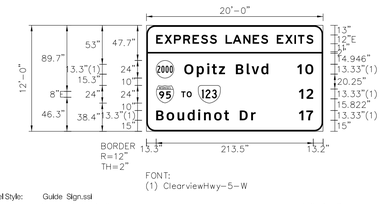

Panel Style: Guide Sign.ssl
Dimensions are in inches.tenths

Letter locations are panel edge to lower left corner

SIGN NUMBER	Text No. 41
WIDTH x HGHT.	20'-0" x 12'-0"
BORDER WIDTH	2"
CORNER RADIUS	12"
MOUNTING	Overhead
BACKGROUND	TYPE: Reflective
	COLOR: Green
LEGEND/BORDER	TYPE: Reflective
	COLOR: White

SYMBOL	ROT	X	Y	WID	HT
M2CX	0	13.3	72.3	24	24
M_1	0	13.3	38.3	24	24
M2A3	0	70.4	38.3	30	24

LETTER POSITIONS (X)

E	X	P	R	E	S	S		L	A	N	E	S		E	X	I	T	S				LENGTH	SERIES:SIZE
13.3	24.6	37.4	50	62.7	74	86	95.6	107.6	117.2	129.7	144.4	155.6	165.2	177.2	188.5	201.3	218.9	217.2				213.5	E 12
O	p	i	t	z		B	l	v	d														ClearviewHwy-5-W
51.4	68.5	82.4	88.9	98.6	106.7	121.6	136.3	142.9	156													114.3	13.3/10.8
1	0																						ClearviewHwy-5-W
205	219.9																					21.8	13.3
T	O																						E
47.3	54.8																					14.2	8
1	2																						ClearviewHwy-5-W
207.2	217.5																					19.5	13.3
B	o	u	d	i	n	o	t		D	r													ClearviewHwy-5-W
13.3	27.4	42.2	55.9	71.3	79.2	92	105.5	112.1	126.9	142.3												135.2	13.3/10.8
1	7																						ClearviewHwy-5-W
207.2	217.3																					19.4	13.3

AFC PLANS

	PROJECT	SHEET NO.
	0095-076-299	I6(2B8)

7/20/2022 4589300101I6(02B9).dgn
2:49:52 PM Plotted By: sswearman

LIMITED ACCESS HIGHWAY

By Resolution of the Highway Commission dated October 4, 1956.
By Resolution of the Highway Commission dated January 18, 1973.
By Resolution of the Commonwealth Transportation Board dated April 19, 2022

PROJECT MANAGER Rimpal Shah, P.E. (703) 259-2362 (NOVA District) _____
SURVEYED BY, DATE H&B Surveying and Mapping, LLC (804) 330-3781, 03/09/2021
DESIGN BY Whitman, Requardt, & Associates, LLP (804) 212-8700 _____
SUBSURFACE UTILITY BY, DATE Accumark, Inc. (804) 550-7740, 07/07/2021

COMMONWEALTH OF VIRGINIA
JEFFREY D. CHENG
Lic. No. 051900
PROFESSIONAL ENGINEER

Jeffrey D Cheng
2022.07.20 16:14:00 -04'00'

Whitman, Requardt & Associates
Baltimore, Maryland
TRAFFIC ENGINEER

REVISED	STATE	STATE ROUTE	STATE PROJECT	SHEET NO.
	VA.	95	0095-076-299,C-501	16(2B9)

DESIGN FEATURES RELATING TO CONSTRUCTION OR TO REGULATION AND CONTROL OF TRAFFIC MAY BE SUBJECT TO CHANGE AS DEEMED NECESSARY BY THE DEPARTMENT

SIGN DETAIL
1:50

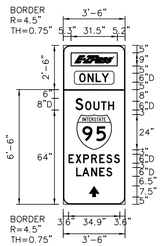

SIGN NUMBER	Text No. 36	
WIDTH x HGHT.	3'-6" x 9'-0"	
BORDER WIDTH	0.75"	
CORNER RADIUS	4.5"	
MOUNTING	Ground	
BACKGROUND	TYPE:	Reflective
	COLOR:	Purple/Green
LEGEND/BORDER	TYPE:	Reflective
	COLOR:	White/White

SYMBOL	ROT	X	Y	WID	HT
	0	5.2	18	31.5	9
M_1	0	9	37	24	24
	0	17.6	4.9	6.8	7.6

Panel Style: Guide Sign.ssl
Dimensions are in inches.tenths
Letter locations are panel edge to lower left corner

LETTER POSITIONS (X)

O	N	L	Y																	LENGTH	SERIES/SIZE
10.9	16.5	22	28.1																	20.2	D 6
S	O	U	T	H																	D
8.2	14.9	20.5	25.7	30.5																26.3	8.8
E	X	P	R	E	S	S															D
3.6	8.3	13.5	19	24.4	29.2	34.4														34.9	6
L	A	N	E	S																	D
8.8	12.8	18.9	24.4	29.2																24.5	6

SIGN DETAIL
1:50

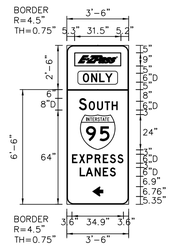

SIGN NUMBER	Text No. 37	
WIDTH x HGHT.	3'-6" x 9'-0"	
BORDER WIDTH	0.75"	
CORNER RADIUS	4.5"	
MOUNTING	Ground	
BACKGROUND	TYPE:	Reflective
	COLOR:	Purple/Green
LEGEND/BORDER	TYPE:	Reflective
	COLOR:	White/White

SYMBOL	ROT	X	Y	WID	HT
	0	5.2	18	31.5	9
M_1	0	9	37	24	24
	90	17.2	5.4	6.8	7.6

Panel Style: Guide Sign.ssl
Dimensions are in inches.tenths
Letter locations are panel edge to lower left corner

LETTER POSITIONS (X)

O	N	L	Y																	LENGTH	SERIES/SIZE
10.9	16.5	22	28.1																	20.2	D 6
S	O	U	T	H																	D
8.2	14.9	20.5	25.7	30.5																26.3	8.8
E	X	P	R	E	S	S															D
3.6	8.3	13.5	19	24.4	29.2	34.4														34.9	6
L	A	N	E	S																	D
8.8	12.8	18.9	24.4	29.2																24.5	6

SIGN DETAIL
1:50

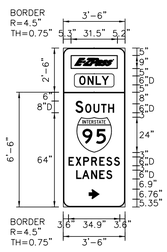

SIGN NUMBER	Text No. 38	
WIDTH x HGHT.	3'-6" x 9'-0"	
BORDER WIDTH	0.75"	
CORNER RADIUS	4.5"	
MOUNTING	Ground	
BACKGROUND	TYPE:	Reflective
	COLOR:	Purple/Green
LEGEND/BORDER	TYPE:	Reflective
	COLOR:	White/White

SYMBOL	ROT	X	Y	WID	HT
	0	5.2	18	31.5	9
M_1	0	9	37	24	24
	270	17.2	5.4	6.8	7.6

Panel Style: Guide Sign.ssl
Dimensions are in inches.tenths
Letter locations are panel edge to lower left corner

LETTER POSITIONS (X)

O	N	L	Y																	LENGTH	SERIES/SIZE
10.9	16.5	22	28.1																	20.2	D 6
S	O	U	T	H																	D
8.2	14.9	20.5	25.7	30.5																26.3	8.8
E	X	P	R	E	S	S															D
3.6	8.3	13.5	19	24.4	29.2	34.4														34.9	6
L	A	N	E	S																	D
8.8	12.8	18.9	24.4	29.2																24.5	6

SPD-2

SIGN DETAIL
1:50

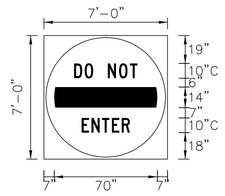

SIGN NUMBER	Text No. 39	
WIDTH x HGHT.	7'-0" x 7'-0"	
BORDER WIDTH	N/A	
CORNER RADIUS	N/A	
MOUNTING	Overhead	
BACKGROUND	TYPE:	Reflective
	COLOR:	White
LEGEND/BORDER	TYPE:	Reflective
	COLOR:	Red

SYMBOL	ROT	X	Y	WID	HT

Panel Style: Guide Sign.ssl
Dimensions are in inches.tenths
Letter locations are panel edge to lower left corner

LETTER POSITIONS (X)

D	O		N	O	T															LENGTH	SERIES/SIZE
35.5	37.7	32.4	43.4	51	56.5															43	C 10
E	N	T	E	R																	C
25.8	32.3	39.5	46.2	52.9																33.3	10

AFC PLANS

	PROJECT	SHEET NO.
	0095-076-299	16(2B9)

Cell Revised 12/1/12

LIMITED ACCESS HIGHWAY

By Resolution of the Highway Commission dated October 4, 1956.
By Resolution of the Highway Commission dated January 18, 1973.
By Resolution of the Commonwealth Transportation Board dated April 19, 2022

PROJECT MANAGER: Rimpal Shah, P.E. (703) 259-2362 (NOVA District) _____
SURVEYED BY, DATE: H&B Surveying and Mapping, LLC (804) 330-3781, 03/09/2021
DESIGN BY: Whitman, Requardt, & Associates, LLP (804) 212-8700 _____.
SUBSURFACE UTILITY BY, DATE: Accumark, Inc. (804) 550-7740, 07/07/2021

SPD-2

SIGN DETAIL
1:100

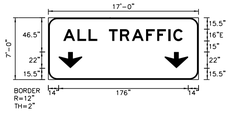

SIGN NUMBER	Text No. 40
WIDTH x HGHT.	17'-0" x 7'-0"
BORDER WIDTH	2"
CORNER RADIUS	12"
MOUNTING	Overhead
BACKGROUND	TYPE: Reflective
	COLOR: White
LEGEND/BORDER	TYPE: Reflective
	COLOR: Black

SYMBOL	ROT	X	Y	WID	HT
ARDWN	0	14	15.5	32.1	22
ARDWN	0	158	15.5	32.1	22

Panel Style: Guide Sign.ssl
Dimensions are in inches.tenths

Letter locations are panel edge to lower left corner

LETTER POSITIONS (X)

A	L	L		T	R	A	F	F	I	C										LENGTH	SERIES/SIZE
20.3	39.6	54.8	66.4	82.4	97.4	113.3	132.8	147.9	162.9	178.7										192.3	E 16

Jeffrey D Cheng
2022.07.20 16:14:26 -04'00'

Whitman, Requardt & Associates
Baltimore, Maryland
TRAFFIC ENGINEER

REVISED	STATE	STATE ROUTE	STATE PROJECT	SHEET NO.
	VA.	95	0095-076-299,C-501	16(2BI01)

DESIGN FEATURES RELATING TO CONSTRUCTION OR TO REGULATION AND CONTROL OF TRAFFIC MAY BE SUBJECT TO CHANGE AS DEEMED NECESSARY BY THE DEPARTMENT

AFC PLANS

	PROJECT	SHEET NO.
	0095-076-299	16(2BI01)

7/18/2022 4589300101I6(02C1).dgn
1:53:51 PM Plotted By: sswearman

LIMITED ACCESS HIGHWAY By Resolution of the Highway Commission dated October 4, 1956.
By Resolution of the Highway Commission dated January 18, 1973.
By Resolution of the Commonwealth Transportation Board dated April 19, 2022

PROJECT MANAGER Rimpal Shah, P.E. (703) 259-2362 (NOVA District) _____
SURVEYED BY, DATE H&B Surveying and Mapping, LLC (804) 330-3781, 03/09/2021
DESIGN BY Whitman, Requardt, & Associates, LLP (804) 212-8700 _____.
SUBSURFACE UTILITY BY, DATE Accutark, Inc. (804) 550-7740, 07/07/2021

COMMONWEALTH OF VIRGINIA
JEFFREY D. CHENG
Lic. No. 051900
PROFESSIONAL ENGINEER

Jeffrey D Cheng
2022.07.20 16:14:51 -04'00'

Whitman, Requardt & Associates
Baltimore, Maryland
TRAFFIC ENGINEER

REVISED	STATE	STATE ROUTE	STATE PROJECT	SHEET NO.
	VA.	95	0095-076-299,C-501	I6(2C1)

DESIGN FEATURES RELATING TO CONSTRUCTION OR TO REGULATION AND CONTROL OF TRAFFIC MAY BE SUBJECT TO CHANGE AS DEEMED NECESSARY BY THE DEPARTMENT

OH STRUCTURE LOCATION 1
STA.658+70', I-95 XPL CONST. ℄

1A - LOOKING NORTH

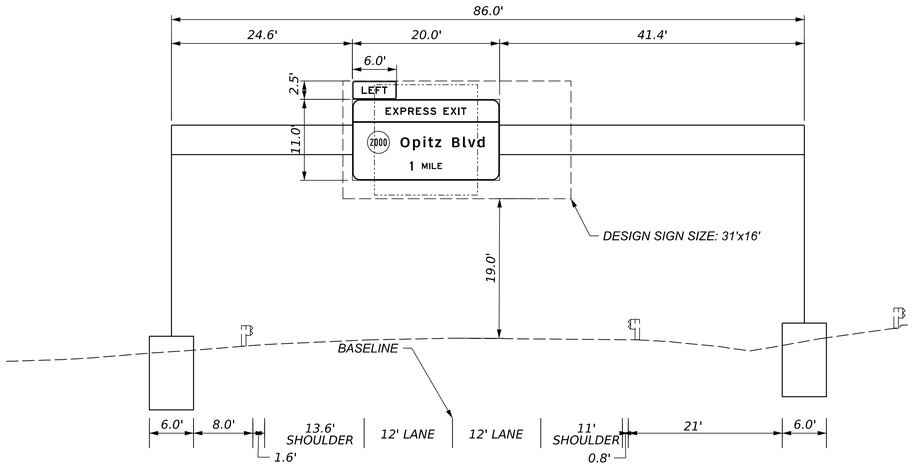

1B - LOOKING SOUTH

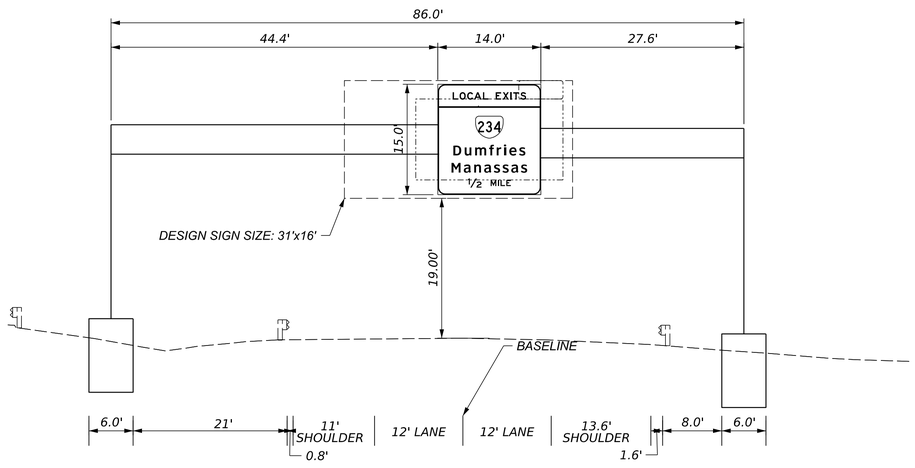

OH STRUCTURE LOCATION 2
STA.667+00', I-95 XPL CONST. ℄

2A - LOOKING NORTH

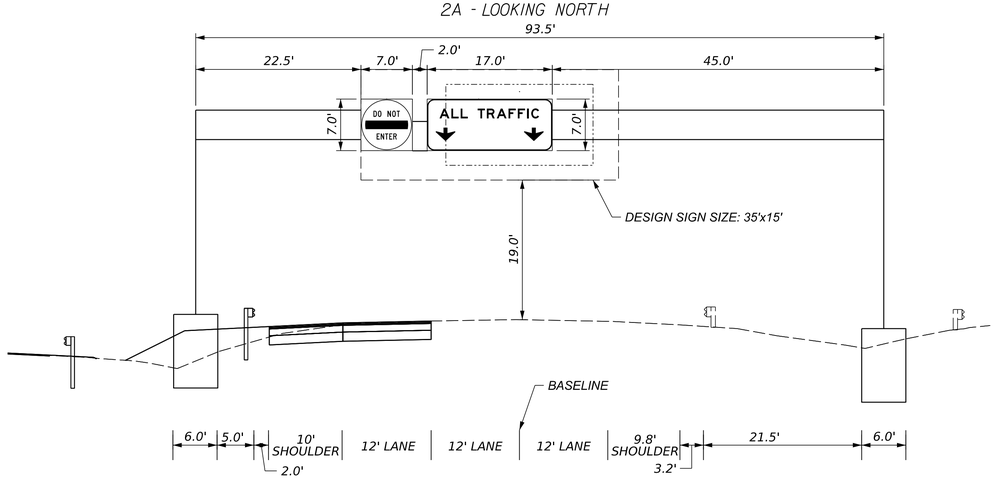

2B - LOOKING SOUTH

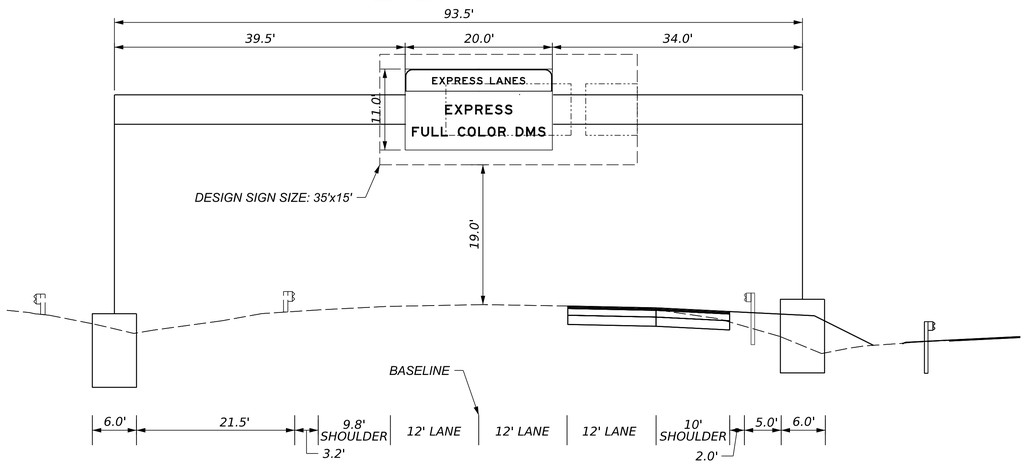

SIGN STRUCTURE GENERAL NOTES:

1. ALL DIMENSIONS ARE APPROXIMATE AND SHALL BE FIELD VERIFIED PRIOR TO FABRICATION.
2. ALL NEW FULL SPAN SIGN STRUCTURES AND FOUNDATIONS SHALL BE DESIGNED TO ACCOMMODATE AN ADDITIONAL STATIC SIGN LOAD OF AT LEAST 200 SQUARE FEET FOR FUTURE USE. ALL CANTILEVER AND BUTTERFLY SIGN STRUCTURES AND FOUNDATIONS SHALL BE DESIGNED TO ACCOMMODATE AN ADDITIONAL STATIC SIGN LOAD OF AT LEAST 50 SQUARE FEET OR A 25% INCREASE IN THE SIGN PANEL AREA SHOWN ON THE PLANS, WHICHEVER IS GREATER, FOR FUTURE USE. DESIGN SIGN SIZES SHOWN.
3. CONCEPTUAL FOUNDATION CONFIGURATIONS ARE SHOWN ON THE PLANS. ACTUAL FOUNDATION CONFIGURATIONS AND DIMENSIONS SHALL BE DETERMINED BY THE CONTRACTOR DURING THE FOUNDATION DESIGN PROCESS. IN SOME FOUNDATION LOCATIONS THERE ARE CONTROLLING FEATURES OR DIMENSIONS SHOWN ON THE PLANS (E.G. A FOUNDATION LOCATED WITHIN CONCRETE TRAFFIC BARRIER). THE CONTRACTOR SHALL ACCOUNT FOR THESE CONTROLLING FEATURES AND DIMENSIONS DURING THE FOUNDATION DESIGN PROCESS, AS APPLICABLE.

AFC PLANS

	PROJECT	SHEET NO.
	0095-076-299	I6(2C1)

Cell Revised 12/11/12

7/18/2022 4589300101(02C2).dgn
4:47:15 PM Plotted By: sswearman

LIMITED ACCESS HIGHWAY

By Resolution of the Highway Commission dated October 4, 1956.
By Resolution of the Highway Commission dated January 18, 1973.
By Resolution of the Commonwealth Transportation Board dated April 19, 2022

PROJECT MANAGER: Rimpal Shah, P.E. (703) 259-2362 (NOVA District)
SURVEYED BY, DATE: H&B Surveying and Mapping, LLC (804) 330-3781, 03/09/2021
DESIGN BY: Whitman, Requardt & Associates, LLP (804) 212-8700
SUBSURFACE UTILITY BY, DATE: Accutrak, Inc. (804) 550-7740, 07/07/2021

COMMONWEALTH OF VIRGINIA
JEFFREY D. CHENG
Lic. No. 051900
PROFESSIONAL ENGINEER

Jeffrey D Cheng
2022.07.20 16:15:11 -04'00'

Whitman, Requardt & Associates
Baltimore, Maryland
TRAFFIC ENGINEER

REVISED	STATE	STATE ROUTE	STATE PROJECT	SHEET NO.
	VA.	95	0095-076-299,C-501	16(2C2)

DESIGN FEATURES RELATING TO CONSTRUCTION OR TO REGULATION AND CONTROL OF TRAFFIC MAY BE SUBJECT TO CHANGE AS DEEMED NECESSARY BY THE DEPARTMENT

OH STRUCTURE LOCATION 3
STA. 686+35', I-95 XPL CONST. ℄

3A - LOOKING NORTH

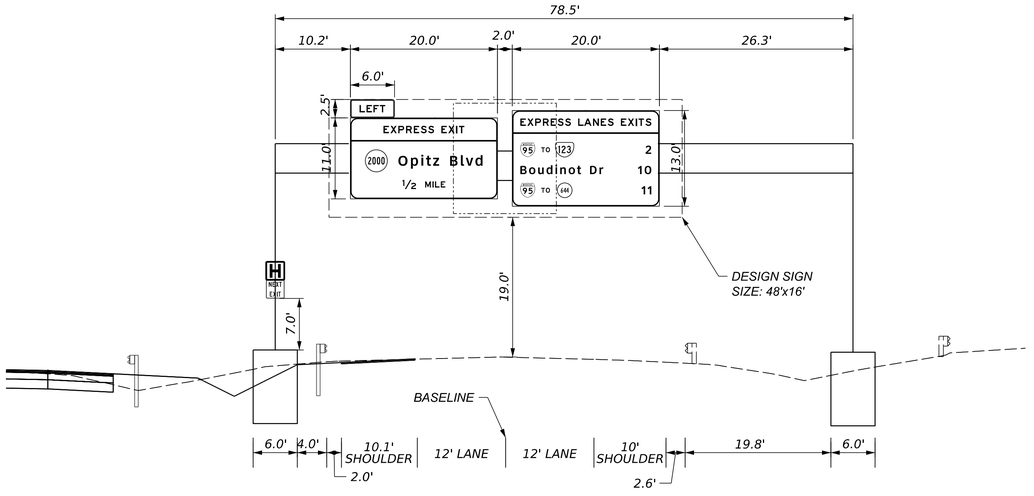

3B - LOOKING SOUTH

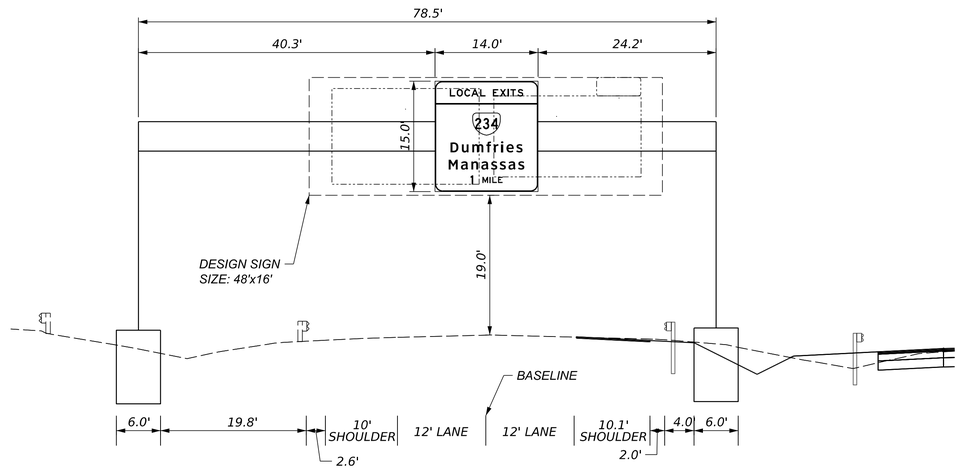

OH STRUCTURE LOCATION 4
STA. 42+75', RAMP DBSR CONST. ℄
LOOKING SOUTH

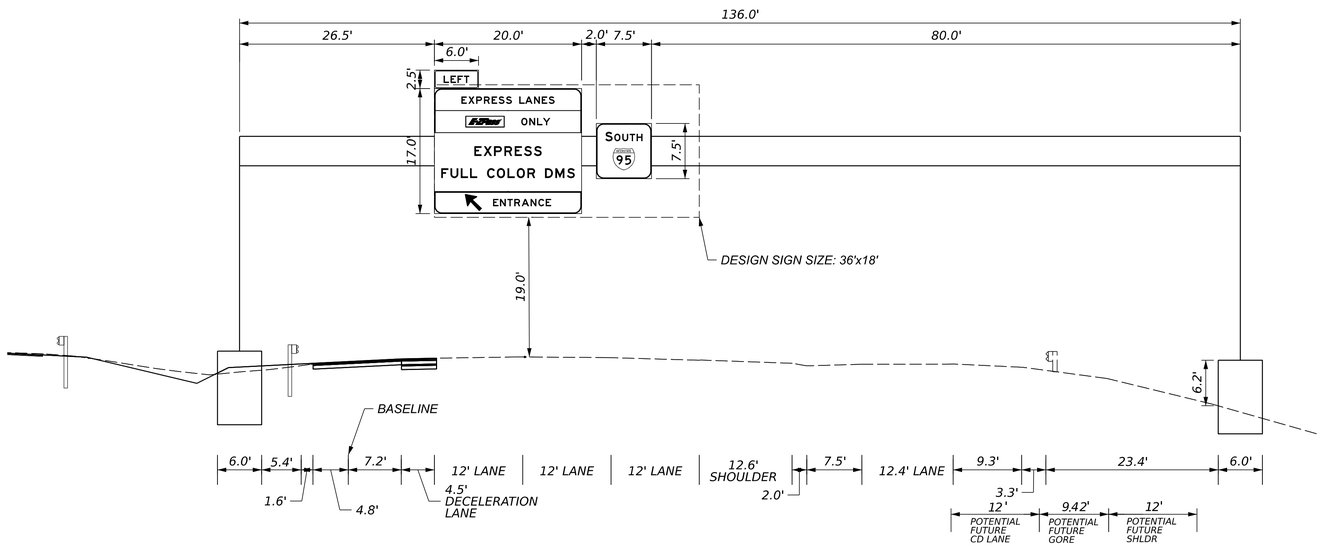

OH STRUCTURE LOCATION 5
STA. 714+35', I-95 XPL CONST. ℄
LOOKING NORTH

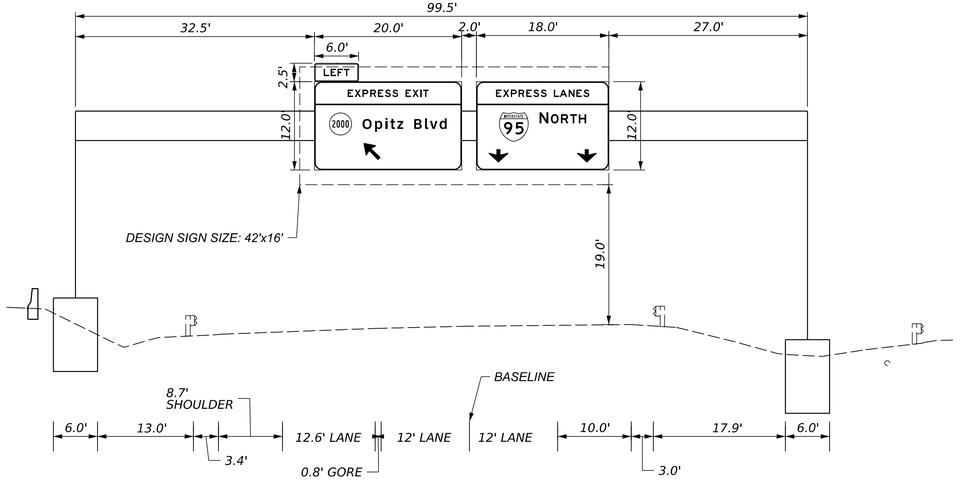

AFC PLANS

PROJECT	SHEET NO.
0095-076-299	16(2C2)

Cell Revised 12/11/12

LIMITED ACCESS HIGHWAY

By Resolution of the Highway Commission dated October 4, 1956.
By Resolution of the Highway Commission dated January 18, 1973.
By Resolution of the Commonwealth Transportation Board dated April 19, 2022

PROJECT MANAGER: Rimpal Shah, P.E. (703) 259-2362 (NOVA District)
SURVEYED BY, DATE: H&B Surveying and Mapping, LLC (804) 330-3781, 03/09/2021
DESIGN BY: Whitman, Requardt, & Associates, LLP (804) 212-8700
SUBSURFACE UTILITY BY, DATE: Accumark, Inc. (804) 550-7740, 07/07/2021

COMMONWEALTH OF VIRGINIA
JEFFREY D. CHENG
Lic. No. 051900
PROFESSIONAL ENGINEER

Jeffrey D Cheng
2022.07.20 16:15:34 -04'00'

Whitman, Requardt & Associates
Baltimore, Maryland
TRAFFIC ENGINEER

REVISED	STATE	STATE ROUTE	STATE PROJECT	SHEET NO.
	VA.	95	0095-076-299,C-501	16(2C3)

DESIGN FEATURES RELATING TO CONSTRUCTION OR TO REGULATION AND CONTROL OF TRAFFIC MAY BE SUBJECT TO CHANGE AS DEEMED NECESSARY BY THE DEPARTMENT

OH STRUCTURE LOCATION 6
STA. 714+67', I-95 XPL CONST. ℄
LOOKING SOUTH

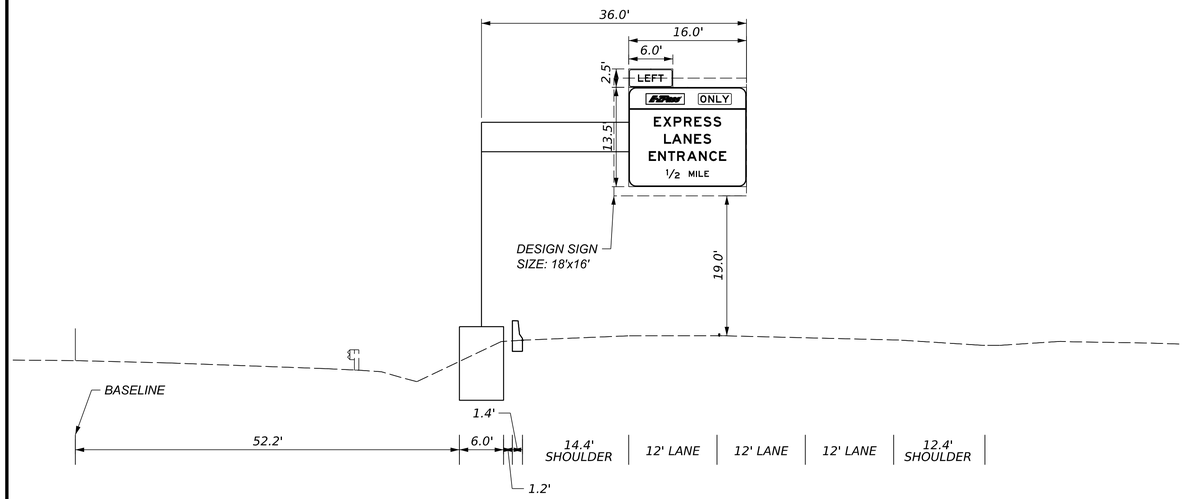

OH STRUCTURE LOCATION 7
STA. 19+50', RAMP OBTR CONST. ℄
LOOKING SOUTH

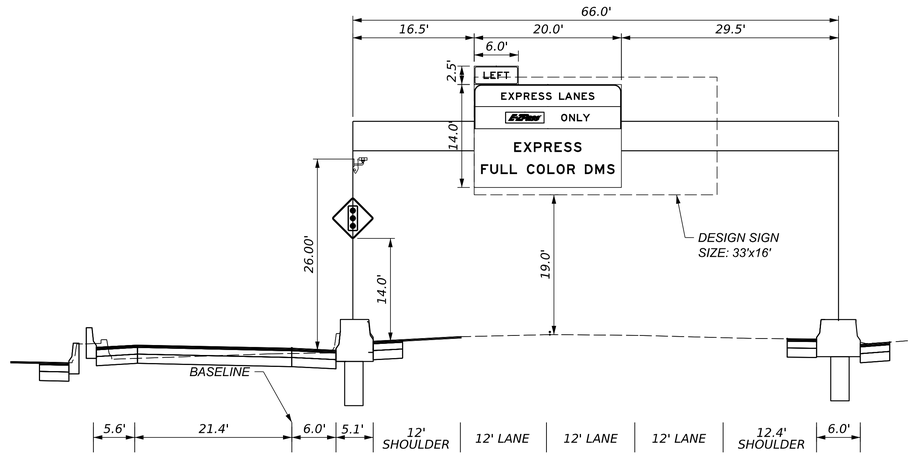

OH STRUCTURE LOCATION 8
STA. 729+51', I-95 XPL CONST. ℄
LOOKING NORTH

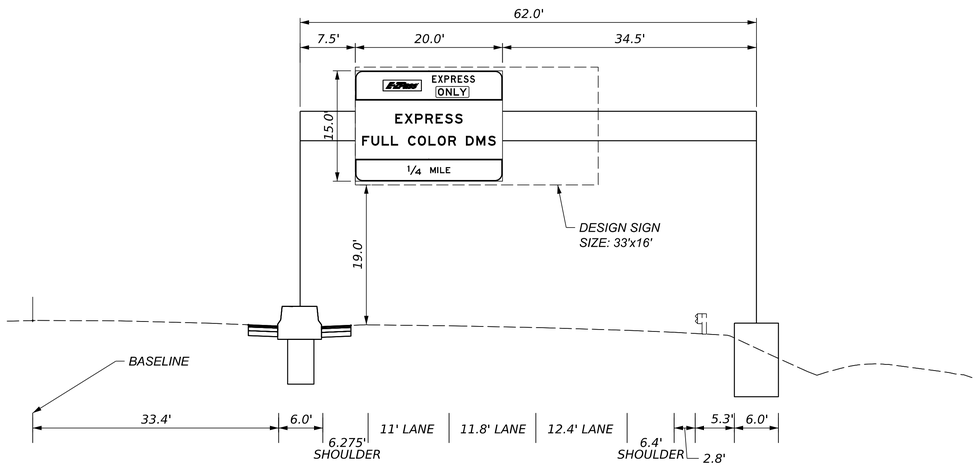

OH STRUCTURE LOCATION 9
STA. 743+06', I-95 XPL CONST. ℄
LOOKING SOUTH

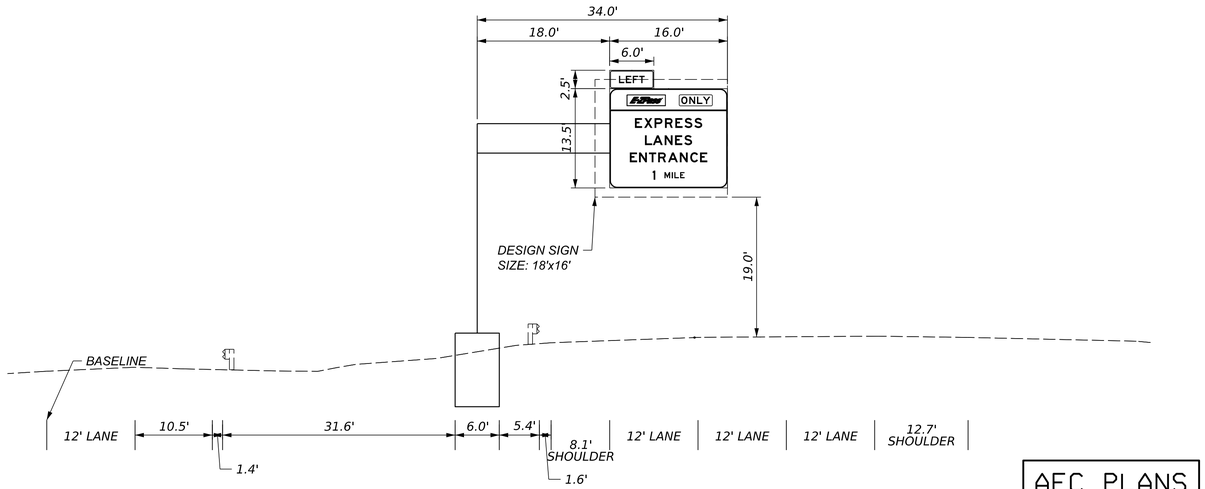

AFC PLANS

PROJECT	SHEET NO.
0095-076-299	16(2C3)

7/19/2022 4589300101I6(02C4).dgn
11:41:12 AM Plotted By: pconstantino

LIMITED ACCESS HIGHWAY

By Resolution of the Highway Commission dated October 4, 1956.
By Resolution of the Highway Commission dated January 18, 1973.
By Resolution of the Commonwealth Transportation Board dated April 19, 2022

PROJECT MANAGER: Rimpal Shah, P.E. (703) 259-2362 (NOVA District) _____
SURVEYED BY, DATE: H&B Surveying and Mapping, LLC (804) 330-3781, 03/09/2021
DESIGN BY: Whitman, Requardt & Associates, LLP (804) 212-8700 _____
SUBSURFACE UTILITY BY, DATE: Accumark, Inc. (804) 550-7740, 07/07/2021

NOTES:
1. THE FOUNDATION DESIGN SHALL ACCOMMODATE ITS CONDUITS THAT MUST PASS THORUGH THE BARRIER FOR THE ROADWAY GATES AND FOR THE DMS POWER AND COMMUNICATIONS. REFER TO ITS PLANS FOR DETAILS.
2. PROPOSED BUTTERFLY STRUCTURE SHALL BE DESIGNED AND INSTALLED SO THAT THE SIGN PANEL IS PERPENDICULAR TO OPITZ BLVD.
3. CONTRACTOR SHALL INSTALL 1/4" FIBER JOINT SEALER ON ALL SIDES WHERE SIGN STRUCTURE FOUNDATION INTERSECTS WITH THE CONCRETE MEDIAN BARRIER CAP.
4. THE EDGE OF THE GM LOCATION 1 FOUNDATION SHALL BE LOCATED 1 FOOT FROM THE EDGE OF THE RETAINING WALL AND THE FOUNDATION SHALL BE CENTERED LONGITUDINALLY BETWEEN THE RETAINING WALL PILES.

COMMONWEALTH OF VIRGINIA
JEFFREY D. CHENG
Lic. No. 051900
PROFESSIONAL ENGINEER

Jeffrey D Cheng
2022.07.20 16:15:54 -04'00'

Whitman, Requardt & Associates
Baltimore, Maryland
TRAFFIC ENGINEER

REVISED	STATE	STATE ROUTE	STATE PROJECT	SHEET NO.
	VA.	95	0095-076-299,C-501	16(2C4)

DESIGN FEATURES RELATING TO CONSTRUCTION OR TO REGULATION AND CONTROL OF TRAFFIC MAY BE SUBJECT TO CHANGE AS DEEMED NECESSARY BY THE DEPARTMENT

BUTTERFLY STRUCTURE LOCATION 10
STA. 62+77', OPITZ BLVD CONST. ℄
LOOKING EAST

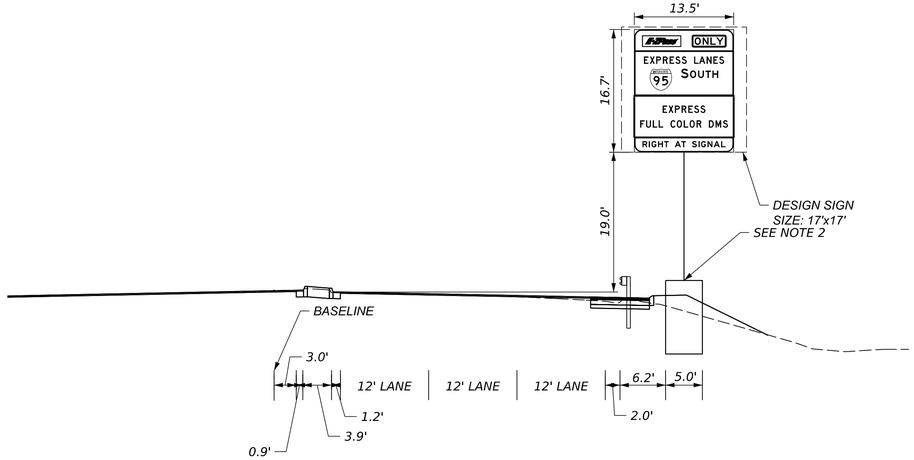

BUTTERFLY STRUCTURE LOCATION 11
STA. 70+77', OPITZ BLVD CONST. ℄
LOOKING WEST

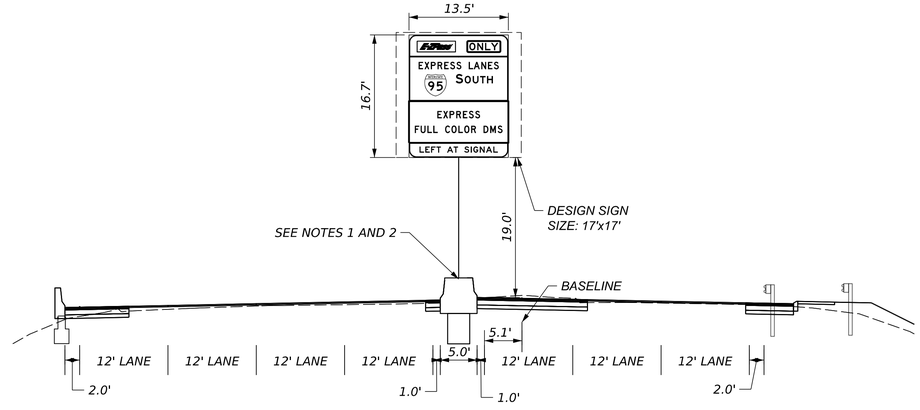

OH STRUCTURE LOCATION 12
STA. 678+20', I-95 XPL CONST. ℄
LOOKING NORTH

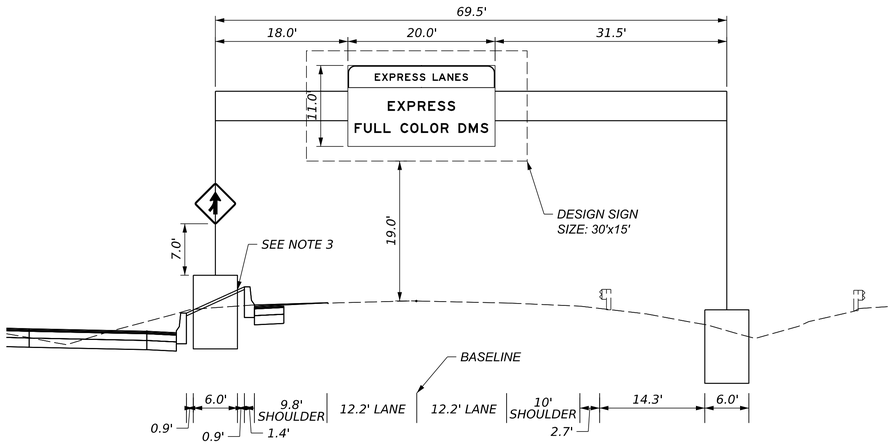

GM LOCATION 1
STA. 64+92', OPITZ BLVD CONST. ℄
LOOKING EAST

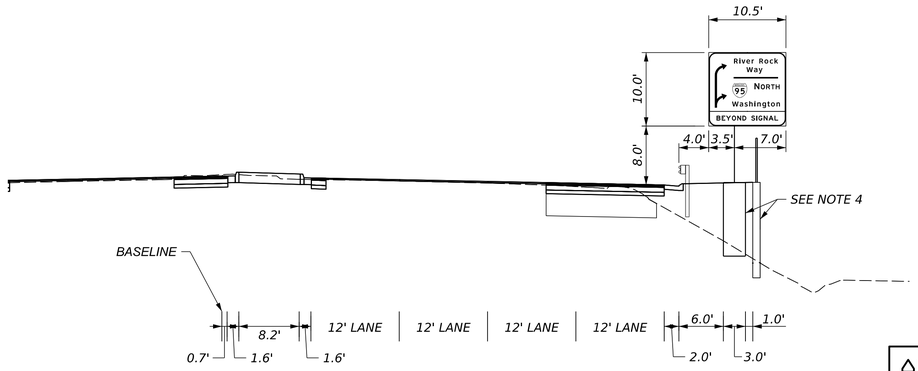

AFC PLANS

PROJECT	SHEET NO.
0095-076-299	16(2C4)

LIMITED ACCESS HIGHWAY

By Resolution of the Highway Commission dated October 4, 1956.
By Resolution of the Highway Commission dated January 18, 1973.
By Resolution of the Commonwealth Transportation Board dated April 19, 2022

PROJECT MANAGER Rimpal Shah, P.E. (703) 259-2362 (NOVA District) _____
SURVEYED BY, DATE H&B Surveying and Mapping, LLC (804) 330-3781, 03/09/2021
DESIGN BY Whitman, Requardt, & Associates, LLP (804) 212-8700 _____.
SUBSURFACE UTILITY BY, DATE Accumark, Inc. (804) 550-7740, 07/07/2021

COMMONWEALTH OF VIRGINIA
JEFFREY D. CHENG
Lic. No. 051900
PROFESSIONAL ENGINEER

Jeffrey D Cheng
2022.07.20 16:16:12 -04'00'

Whitman, Requardt & Associates
Baltimore, Maryland
TRAFFIC ENGINEER

REVISED	STATE	STATE		SHEET NO.
		ROUTE	PROJECT	
	VA.	95	0095-076-299,C-501	16(2D11)

DESIGN FEATURES RELATING TO CONSTRUCTION OR TO REGULATION AND CONTROL OF TRAFFIC MAY BE SUBJECT TO CHANGE AS DEEMED NECESSARY BY THE DEPARTMENT

GENERAL NOTES

1. Unless otherwise specified, the Contractor shall have the option of re-furbishing framing members on existing sign panels or furnishing new sign panels with corresponding sign message for mounting on new breakaway post.

2. Unless otherwise approved by the Engineer, existing traffic signs which are to be removed shall remain in place until the new sign structure and critical sign message are in place.

3. Existing lights shall be relocated or adjusted to conform with the new sign location(s). All costs for relocation or adjustment of existing lights shall be included in price bid for replacement of sign.

4. Salvaged materials shall be properly stored as directed by the Engineer and be delivered during the Departments normal work hours and days. The Contractor shall notify the Engineer at least five days prior to the proposed delivery date.

5. All sign panels, framing members, and miscellaneous hardware shall be salvaged by the Contractor for the Department and delivered intact to the Bristol Sign Shop, 870 Bonham Road Bristol, Virginia 24201

6. Any delineators or mile posts which will be disturbed by installation of proposed guardrail shall be reset back of proposed guardrail as directed by the Engineer. The cost of which shall be included in the price bid per lin. ft. of guardrail.

7. Relocated sign panels, as designated on the plans, shall be provided with back panel. The size of the back panel shall be determined by the contractor according to the type ZEE bar and the following formula:
For Panel with "A" zee bar - Area of backing = (b-Eflange width + 2")) (d + 1")
For Panel with "B" zee bar - Area of backing = (b - Eflange width + 2")) (d+2")
For sign details see Sheet

8. Definition of Symbols:

A
B

A. The top section indicates the type of structure. (SEE DEFINITION OF TYPES)
B. The bottom section indicates the measurement & payment item. (SEE MEASUREMENT & PAYMENT ITEMS)

EXAMPLE :

DP - 1
L

O/H Double Pole 50-75 L.F.
REMOVE AND DISPOSE OF O/H SIGN STRUCTURE, TYPE ( )

SP - 3
Q

Sign Panel 201-300 S.F.
RELOCATE EXISTING SIGN PANEL, TYPE ( )

9. All educational panels are to be removed.

10. Unless otherwise indicated on the plans, all breakaway sign structures shall be located within 25 feet of the signs current field location or as directed by the Engineer.

11. Delineators are to be spaced at one tenth of a mile intervals between milepost markers , unless otherwise indicated.

NOTES FOR SAFETY IMPROVEMENT ITEMS

MEASUREMENT & PAYMENT ITEMS

A. RELOCATE EXISTING SIGN STRUCTURE, TYPE ( ),
will be measured in units of each and paid for at the contract unit price per each, which price shall be full compensation for dismantling and removing existing sign and support(s), backfilling resulting holes, installing existing sign and support(s) in the new location with special backfill material, furnishing new miscellaneous nuts , bolts, and washers, and for all materials, labor, tools, equipment and incidentals necessary to complete the work.

B. REPLACE WITH SIGN TYPE ( ) ON O/H STRUCTURE - SALVAGE,
will be measured in units of each per sign type and paid for at the contract unit price per each , which price shall be full compensation for dismantling, removal, and salvage of existing sign panels and framing members, for furnishing and mounting new sign panels, sign message and framing members, and for all materials, labor, tools, equipment and incidentals necessary to complete the work.

C. REPLACE WITH SIGN TYPE ( ) ON O/H STRUCTURE - DISPOSAL,
will be measured in units of each per sign type and paid for at the contract unit price per each , which price shall be full compensation for dismantling, removal, and disposal of existing sign panels and framing members, for furnishing and mounting new sign panels, sign message and framing members, and for all materials, labor, tools, equipment and incidentals necessary to complete the work.

D. RELOCATE EXISTING SIGN TYPE ( ) AND LIGHTS TO O/H STRUCTURE,
will be measured in units of each and paid for at the contract unit price per each, which price shall be full compensation for relocation of sign panel and lighting system, furnishing and installing additional buried cable and boxes, and for all materials, labor, tools, equipment and incidentals necessary to complete the work.

E. RELOCATE EXISTING SIGN TYPE ( ) TO O/H STRUCTURE,
will be measured in units of each and paid for at the contract unit price per each, which price shall be full compensation for relocation of sign panel , and for all materials, labor, tools, equipment and incidentals necessary to complete

F. MODIFY EXISTING SIGN MESSAGE, TYPE ( ),
will be measured in units of each and paid for at the contract unit price per each, which price shall be full compensation for drilling new holes, plugging of unused holes with compatible material, relocation of sign message, and for all materials, labor, tools, equipment and incidentals necessary to complete the work.

G. REMOVE AND DISPOSE OF SIGN STRUCTURE, TYPE ( ),
will be measured in units of each and paid for at the contract unit price per each, which price shall be full compensation for removal and disposal of sign panels , posts and foundations to at least two feet below existing ground line, backfilling and restoration (topsoiling and seeding), and for all materials, labor, tools, equipment and incidentals necessary to complete the work.

H. REMOVE AND SALVAGE SIGN STRUCTURE, TYPE ( ),
will be measured in units of each and paid for at the contract unit price per each, which price shall be full compensation for removal and salvage of sign panels , posts and foundations to at least two feet below existing ground line, backfilling and restoration (topsoiling and seeding), and for all materials, labor, tools, equipment and incidentals necessary to complete the work.

I. MODIFY EXISTING O/H STRUCTURE, LOCATION NO. ( ),
will be measured in units of each and paid for at the contract unit price per each, which price shall be full compensation for furnishing, installing and/or relocating sign panels, framing members, supports, light fixtures and supports electrical conduit, boxes, and conductors, and for all materials, labor, tools, equipment and incidentals necessary to

J. REMOVE AND DISPOSE OF O/H STRUCTURE AND LIGHTS, TYPE ( ),
will be measured in units of each and paid for at the contract unit price per each, which price shall be full compensation for removal and disposal of sign panels, lighting systems, supports, and concrete foundations to at least two feet below existing ground line, backfilling and restoration (topsoiling and seeding), and for all materials, labor, tools, equipment and incidentals necessary to complete the work.

k. REMOVE AND SALVAGE O/H STRUCTURE AND LIGHTS, TYPE ( ),
will be measured in units of each and paid for at the contract unit price per each, which price shall be full compensation for removal and salvage of sign panels, lighting systems, supports, and concrete foundations to at least two feet below existing ground line, backfilling and restoration (topsoiling and seeding), and for all materials, labor, tools, equipment and incidentals necessary to complete the work.

L. REMOVE AND DISPOSE OF O/H SIGN STRUCTURE, TYPE ( ),
will be measured in units of each and paid for at the contract unit price per each, which price shall be full compensation for removal and disposal of sign panels, supports, and concrete foundations to at least two feet below existing ground line, backfilling and restoration (topsoiling and seeding), and for all materials, labor, tools, equipment and incidentals necessary to complete the work.

M. REMOVE AND SALVAGE O/H SIGN STRUCTURE, TYPE ( ),
will be measured in units of each and paid for at the contract unit price per each, which price shall be full compensation for removal and salvage of sign panels, supports, and concrete foundations to at least two feet below existing ground line, backfilling and restoration (topsoiling and seeding), and for all materials, labor, tools, equipment and incidentals necessary to complete the work.

N. REWIRE EXISTING O/H STRUCTURE, TYPE ( ),
will be measured in units of each and paid for at the contract unit price per each, which price shall be full compensation for removing existing conductor wiring, furnishing and installing all conductors, connections and ground assemblies, and for all materials, labor, tools, equipment and incidentals necessary to complete the work.

O. REPLACE AND DISPOSE OF LIGHTS ON O/H STRUCTURE, TYPE ( ),
will be measured in units of each and paid for at the contract unit price per each, which price shall be full compensation for removal and disposal of existing lighting system, for furnishing and installing new lighting system with supports, for rewiring the structure, and for all materials, labor, tools, equipment and incidentals necessary to complete the work.

P. REPLACE AND SALVAGE LIGHTS ON O/H STRUCTURE, TYPE ( ),
will be measured in units of each and paid for at the contract unit price per each, which price shall be full compensation for removal and salvage of existing lighting system, for furnishing and installing new lighting system with supports, and for all materials, labor, tools, equipment and incidentals necessary to complete the work.

Q. RELOCATE EXISTING SIGN PANEL, TYPE ( ),
will be measured in units of each and paid for at the contract unit price per each, which price shall be full compensation for removing existing panel, refurbishing framing members, furnishing and installing necessary back panels, erecting existing sign panel to new breakaway posts, and for all materials, labor, tools, equipment and incidentals necessary to complete the work.

R. REMOVE AND SALVAGE SIGN TYPE ( ), FROM O/H STRUCTURE,
will be measured in units of each and paid for at the contract unit price per each, which price shall be full compensation for dismantling, removal and salvage of existing sign panels and framing members, and for all materials, labor, tools, equipment and incidentals necessary to complete the work.

S. REMOVE AND DISPOSE OF DELINEATORS
will be measured in units of each and paid for at the contract unit price per each, which price shall be full compensa-

T. REMOVE EXISTING CONCRETE FOUNDATION , AND POLE,
will be measured in units of each and paid for at the contract unit price per each, which price shall be full compensation for all necessary excavation,demolition and removal of concrete to at least two feet below existing ground line, disposal of waste materials, backfilling with suitable materials, compaction and restoration (grading, topsoiling and seeding), and for all materials, labor, tools, equipment and incidentals necessary to complete the work.

DEFINITION OF TYPES

TYPE	DESCRIPTION	SIZE
DP-1	O/H Double Pole	50 - 75 L.F.
DP-2	O/H Double Pole	76 - 101 L.F.
DP-3	O/H Double Pole	102 - 127 L.F.
DP-4	O/H Double Pole	128 - 153 L.F.
DP-5	O/H Double Pole	154 - 179 L.F.
DP-6	O/H Double Pole	180 - 205 L.F.
DC-1	O/H Double Pole & Cantilever	75 - 100 L.F.
DC-2	O/H Double Pole & Cantilever	101 - 126 L.F.
DC-3	O/H Double Pole & Cantilever	127 - 152 L.F.
DC-4	O/H Double Pole & Cantilever	153 - 178 L.F.
DC-5	O/H Double Pole & Cantilever	179 - 204 L.F.
DC-6	O/H Double Pole & Cantilever	205 - 230 L.F.
CS-1	O/H Single Arm Cantilever	25 - 40 L.F.
CS-2	O/H Single Arm Cantilever	41 - 60 L.F.
CD-1	O/H Double Arm Cantilever	50 - 74 L.F.
CD-2	O/H Double Arm Cantilever	75 - 125 L.F.
CD-3	O/H Double Arm Cantilever	126 - 175 L.F.
CD-4	O/H Double Arm Cantilever	176 - 225 L.F.
BM	O/H Bridge Mount	EA.
I	Non-breakaway Single Metal Pole	EA.
II	Non-breakaway Two Metal Poles	EA.
III	Non-breakaway Three Metal Poles	EA.
V	Breakaway Single Round Metal Pole	EA.
VA	Breakaway Single Metal Pole	EA.
VIA	Breakaway Two Metal Poles	EA.
VIA3	Breakaway Three Metal Poles	EA.
VIIA	3½" Rolled Rail Steel Pole	EA.
WP-1	Single Wood Post	EA.
WP-2	Two Wood Posts	EA.
STP-1	Square Tube Post	EA.
STP-2	Two Square Tube Posts	EA.
SP-1	Sign Panel	0 - 100 S.F.
SP-2	Sign Panel	101 - 200 S.F.
SP-3	Sign Panel	201 - 300 S.F.
SP-4	Sign Panel	301 - 400 S.F.
SP-5	Sign Panel	401 - 500 S.F.
SP-6	Sign Panel	501 - 600 S.F.

AFC PLANS

	PROJECT	SHEET NO.
	0095-076-299	16(2D11)

LIMITED ACCESS HIGHWAY

By Resolution of the Highway Commission dated October 4, 1956.
By Resolution of the Highway Commission dated January 18, 1973.
By Resolution of the Commonwealth Transportation Board dated April 19, 2022

PROJECT MANAGER Rimpal Shah, P.E. (703) 259-2362 (NOVA District)
SURVEYED BY, DATE H&B Surveying and Mapping, LLC (804) 330-3781, 03/09/2021
DESIGN BY Whitman, Requardt, & Associates, LLP (804) 212-8700
SUBSURFACE UTILITY BY, DATE Accumark, Inc. (804) 550-7740, 07/07/2021

PAVEMENT MARKING AND BARRIER MOUNTED SIGN DETAILS

COMMONWEALTH OF VIRGINIA
JEFFREY D. CHENG
Lic. No. 051900
PROFESSIONAL ENGINEER

Jeffrey D Cheng
2022.07.20 16:16:32 -04'00'

Whitman, Requardt & Associates
Baltimore, Maryland
TRAFFIC ENGINEER

REVISED	STATE	STATE ROUTE	STATE PROJECT	SHEET NO.
	VA.	95	0095-076-299,C-501	16(2D2)

DESIGN FEATURES RELATING TO CONSTRUCTION OR TO REGULATION AND CONTROL OF TRAFFIC MAY BE SUBJECT TO CHANGE AS DEEMED NECESSARY BY THE DEPARTMENT

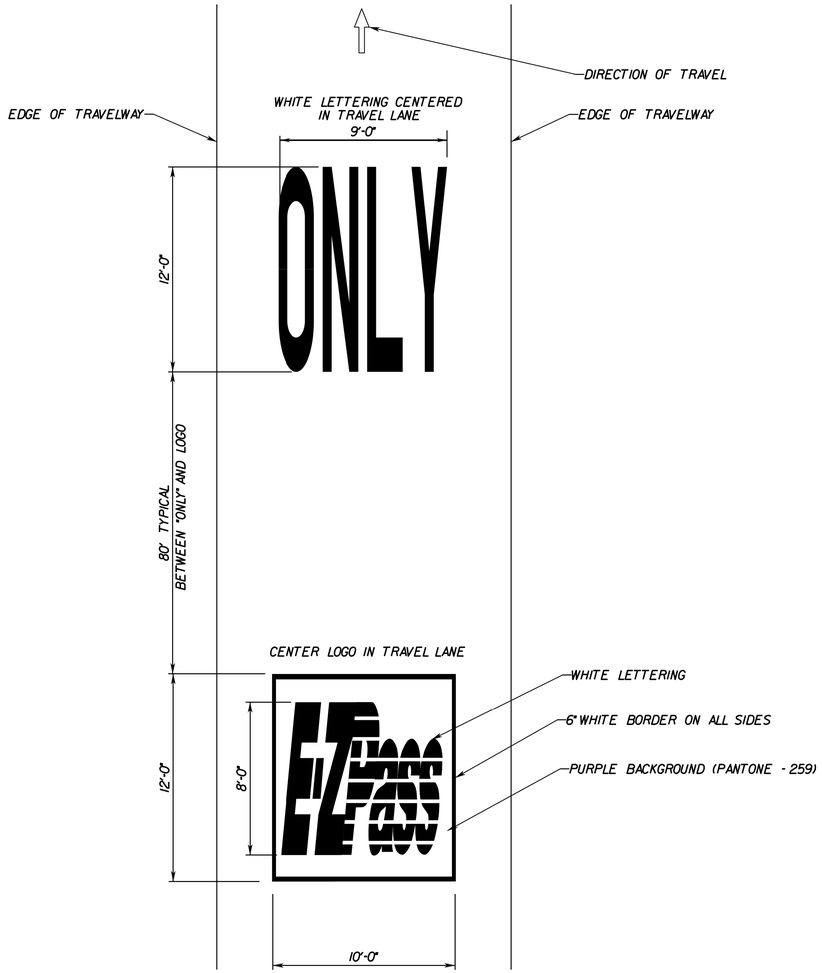

E-ZPASS LOGO

NOT TO SCALE
TYPICAL INSTALLATION
THERMOPLASTIC PAINT
SEE PLANS FOR ACTUAL LOCATION

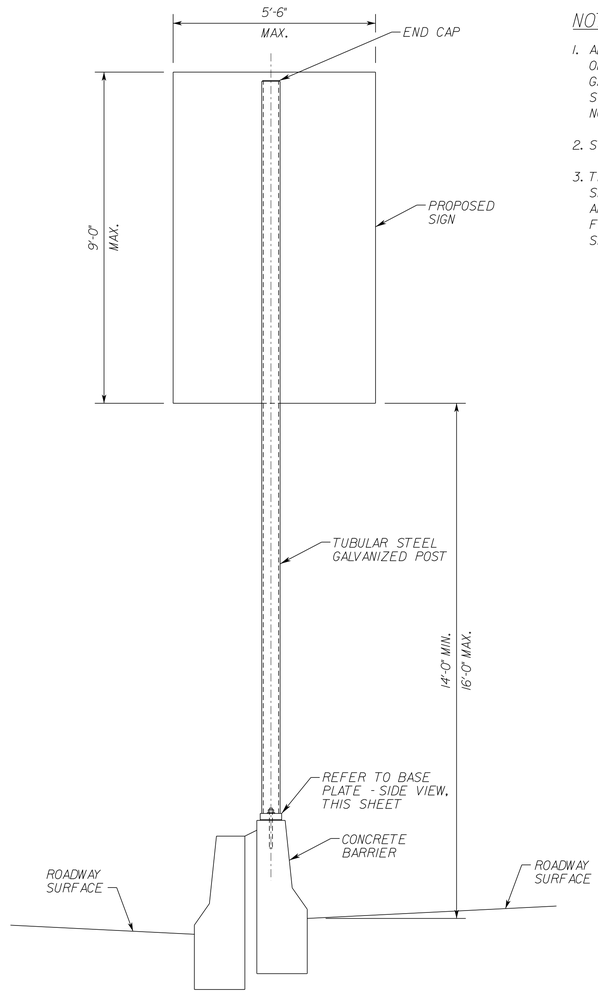

SECTION VIEW

NOTES:

1. ALL STRUCTURAL STEEL SHALL BE GALVANIZED TO MEET THE REQUIREMENTS OF ASTM A123. BOLTS, NUTS AND WASHERS SHALL BE HOT DIPPED OR MECHANICALLY GALVANIZED. THE COATING SHALL MEET THE REQUIREMENTS OF ASTM A153. STRUCTURAL STEEL TO BE GALVANIZED AFTER FABRICATION, UNLESS OTHERWISE NOTED.
2. STEEL POST SHALL CONFORM TO ASTM A-501 UNLESS OTHERWISE NOTED.
3. THE CONTRACTOR SHALL DESIGN ALL STRUCTURAL SUPPORTS FOR THE SIGNS, SIGN CONNECTIONS, AND CONNECTIONS TO THE BARRIERS. THE DETAILS SHOWN ARE SCHEMATIC. THE CONTRACTOR SHALL SUBMIT CALCULATIONS TO THE ENGINEER FOR APPROVAL. THE DETAILS FOR STRUCTURAL SUPPORTS AND CONNECTIONS SHALL BE DETAILED ON SHOP DRAWINGS STAMPED BY THE CONTRACTORS ENGINEER.

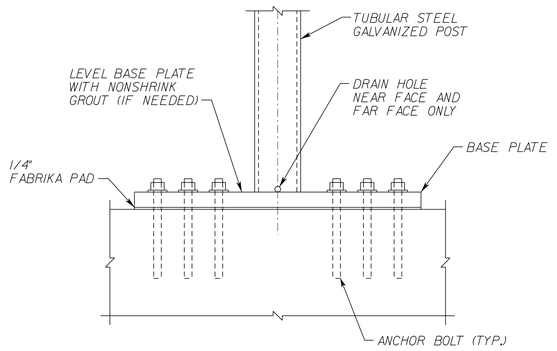

BASE PLATE - SIDE VIEW

AFC PLANS

N.T.S.	PROJECT 0095-076-299	SHEET NO. 16(2D2)

7/20/2022 4589300101601(03).dgn
4:23:35 PM Plotted By: sswearman

LIMITED ACCESS HIGHWAY By Resolution of the Highway Commission dated October 4, 1956
By Resolution of the Highway Commission dated January 18, 1973
By Resolution of the Commonwealth Transportation Board dated April 19, 2022

PROJECT MANAGER _____
SURVEYED BY, DATE _____
DESIGN BY _____
SUBSURFACE UTILITY BY, DATE _____

COMMONWEALTH OF VIRGINIA
JEFFREY D. CHENG
Lic. No. 051900
PROFESSIONAL ENGINEER

Jeffrey D Cheng
2022.07.20 16:25:59 -04'00'

Whitman, Requardt & Associates
Baltimore, Maryland
TRAFFIC ENGINEER

REVISED	STATE	STATE ROUTE	STATE PROJECT	SHEET NO.
	VA.	95	0095-076-299,C-501	16(3)

DESIGN FEATURES RELATING TO CONSTRUCTION OR TO REGULATION AND CONTROL OF TRAFFIC MAY BE SUBJECT TO CHANGE AS DEEMED NECESSARY BY THE DEPARTMENT

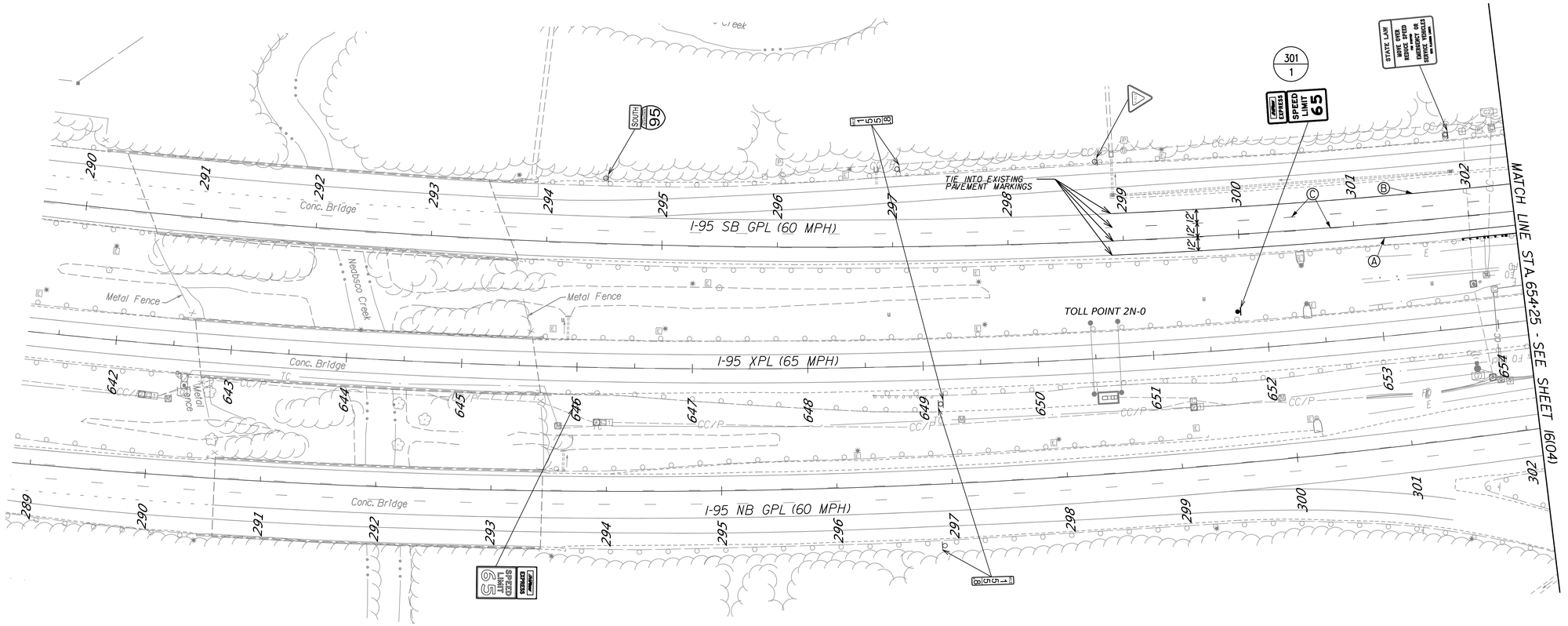

NOTES:
1. REMOVE EXISTING SIGN PANEL FROM EXISTING SUPPORTS ON EXISTING OVERHEAD STRUCTURE AND INSTALL PROPOSED SIGN PANEL ON EXISTING SUPPORTS.

EXISTING O/H SIGN STRUCTURE LOCATED AT MILE MARKER 146.39

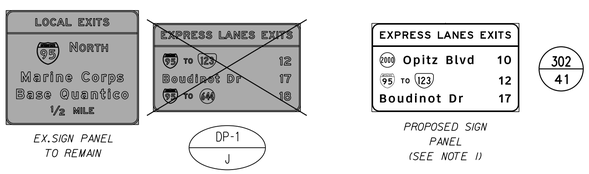

EX. SIGN PANEL TO REMAIN

PROPOSED SIGN PANEL (SEE NOTE 1)

PAVEMENT MARKING LEGEND

- (A) TYPE B, CLASS VI, YELLOW PAVEMENT LINE MARKING, 6" WIDTH
- (B) TYPE B, CLASS VI, WHITE PAVEMENT LINE MARKING, 6" WIDTH
- (C) TYPE B, CLASS VI, WHITE PAVEMENT LINE MARKING, 6" WIDTH (10' LINE, 30' SPACE)
- (D) TYPE B, CLASS VI, WHITE PAVEMENT LINE MARKING, 6" WIDTH (3' LINE, 9' SPACE)
- (E) TYPE B, CLASS VI, WHITE PAVEMENT LINE MARKING, 12" WIDTH (3' LINE, 9' SPACE)
- (F) TYPE B, CLASS VI, WHITE PAVEMENT LINE MARKING, 12" WIDTH
- (G) TYPE B, CLASS VI, WHITE PAVEMENT LINE MARKING, 24" WIDTH
- (I) TYPE B, CLASS VI, CONTRAST WHITE PAVEMENT LINE MARKING, 6" WIDTH
- (J) TYPE B, CLASS VI, CONTRAST WHITE PAVEMENT LINE MARKING, 6" WIDTH (10' LINE, 30' SPACE)
- (D) TYPE B, CLASS VI, WHITE PAVEMENT MARKING MESSAGE (SEE SHEET 16(2D2) FOR DETAIL)

AFC PLANS

SCALE 0 50' 100'

PROJECT	SHEET NO.
0095-076-299	16(3)

7/20/2022 4589300101G(04).dgn
3:32:54 PM Plotted By: sswearman

LIMITED ACCESS HIGHWAY

By Resolution of the Highway Commission dated October 4, 1956
By Resolution of the Highway Commission dated January 18, 1973
By Resolution of the Commonwealth Transportation Board dated April 19, 2022

PROJECT MANAGER Rimpal Shah, P.E. (703) 259-2362 (NOVA District) _____
SURVEYED BY, DATE H&B Surveying and Mapping, LLC (804) 330-3781, 03/09/2021
DESIGN BY Whitman, Requardt, & Associates, LLP (804) 212-8700 _____
SUBSURFACE UTILITY BY, DATE Accumark, Inc. (804) 550-7740, 07/07/2021

COMMONWEALTH OF VIRGINIA
JEFFREY D. CHENG
Lic. No. 051900
PROFESSIONAL ENGINEER

Jeffrey D Cheng
2022.07.20 16:18:54 -04'00'

Whitman, Requardt & Associates
Baltimore, Maryland
TRAFFIC ENGINEER

REVISED	STATE	STATE ROUTE	STATE PROJECT	SHEET NO.
	VA.	95	0095-076-299,C-501	16(4)

DESIGN FEATURES RELATING TO CONSTRUCTION OR TO REGULATION AND CONTROL OF TRAFFIC MAY BE SUBJECT TO CHANGE AS DEEMED NECESSARY BY THE DEPARTMENT

OH STRUCTURE LOCATION 2B
STA.667+00', I-95 XPL CONST.B

OH STRUCTURE LOCATION 1B
STA.658+70', I-95 XPL CONST.B

DALE CITY REST AREA

MATCH LINE STA.654+25 - SEE SHEET 16(05)

MATCH LINE STA.668+25 - SEE SHEET 16(05)

I-95 SB GPL (60 MPH)

I-95 XPL (65 MPH)

I-95 NB GPL (60 MPH)

TIE INTO EXISTING PAVEMENT MARKINGS

0760050

0760237

LOCAL EXITS 234 Dumfries Manassas 1/2 MILE

401A 2

SOUTH 95

REST AREA

SOUTH CAR REST AREA NO TRUCKS

Purple Heart Trail

402A 3

VIETNAM VETERANS MEMORIAL HIGHWAY

EXPRESS LANES EXPRESS FULL COLOR DMS

EXPRESS LANES DMS

DP-1 J

401B 4

2000 Opitz Blvd 1 MILE

EXPRESS EXIT LEFT

402B 39

DO NOT ENTER

402C 40

ALL TRAFFIC

AUTHORIZED VEHICLES ONLY

OH STRUCTURE LOCATION 1A
STA.655+31', I-95 XPL CONST.B

OH STRUCTURE LOCATION 2A
STA.667+00', I-95 XPL CONST.B

PAVEMENT MARKING LEGEND

- (A) TYPE B, CLASS VI, YELLOW PAVEMENT LINE MARKING, 6" WIDTH
- (B) TYPE B, CLASS VI, WHITE PAVEMENT LINE MARKING, 6" WIDTH
- (C) TYPE B, CLASS VI, WHITE PAVEMENT LINE MARKING, 6" WIDTH (10' LINE, 30' SPACE)
- (D) TYPE B, CLASS VI, WHITE PAVEMENT LINE MARKING, 6" WIDTH (3' LINE, 9' SPACE)
- (E) TYPE B, CLASS VI, WHITE PAVEMENT LINE MARKING, 12" WIDTH (3' LINE, 9' SPACE)
- (F) TYPE B, CLASS VI, WHITE PAVEMENT LINE MARKING, 12" WIDTH
- (G) TYPE B, CLASS VI, WHITE PAVEMENT LINE MARKING, 24" WIDTH
- (I) TYPE B, CLASS VI, CONTRAST WHITE PAVEMENT LINE MARKING, 6" WIDTH
- (J) TYPE B, CLASS VI, CONTRAST WHITE PAVEMENT LINE MARKING, 6" WIDTH (10' LINE, 30' SPACE)
- (D) TYPE B, CLASS VI, WHITE PAVEMENT MARKING MESSAGE (SEE SHEET 16(2D2) FOR DETAIL)

AFC PLANS

SCALE 0 50' 100'

PROJECT	SHEET NO.
0095-076-299	16(4)

Cell Revised 12/11/12

7/20/2022 4589300101G(05).dgn
3:32:59 PM Plotted By: sswearman

LIMITED ACCESS HIGHWAY

By Resolution of the Highway Commission dated October 4, 1956.
By Resolution of the Highway Commission dated January 18, 1973.
By Resolution of the Commonwealth Transportation Board dated April 19, 2022

PROJECT MANAGER: Rimpal Shah, P.E. (703) 259-2362 (NOVA District) _____
SURVEYED BY, DATE: H&B Surveying and Mapping, LLC (804) 330-3781, 03/09/2021
DESIGN BY: Whitman, Requardt & Associates, LLP (804) 212-8700 _____
SUBSURFACE UTILITY BY, DATE: Accumark, Inc. (804) 550-7740, 07/07/2021

PAVEMENT MARKING LEGEND

- (A) TYPE B, CLASS VI, YELLOW PAVEMENT LINE MARKING, 6" WIDTH
- (B) TYPE B, CLASS VI, WHITE PAVEMENT LINE MARKING, 6" WIDTH
- (C) TYPE B, CLASS VI, WHITE PAVEMENT LINE MARKING, 6" WIDTH (10' LINE, 30' SPACE)
- (D) TYPE B, CLASS VI, WHITE PAVEMENT LINE MARKING, 6" WIDTH (3' LINE, 9' SPACE)
- (E) TYPE B, CLASS VI, WHITE PAVEMENT LINE MARKING, 12" WIDTH (3' LINE, 9' SPACE)
- (F) TYPE B, CLASS VI, WHITE PAVEMENT LINE MARKING, 12" WIDTH
- (G) TYPE B, CLASS VI, WHITE PAVEMENT LINE MARKING, 24" WIDTH
- (I) TYPE B, CLASS VI, CONTRAST WHITE PAVEMENT LINE MARKING, 6" WIDTH
- (J) TYPE B, CLASS VI, CONTRAST WHITE PAVEMENT LINE MARKING, 6" WIDTH (10' LINE, 30' SPACE)
- (O) TYPE B, CLASS VI, WHITE PAVEMENT MARKING MESSAGE (SEE SHEET 16(2D2) FOR DETAIL)

COMMONWEALTH OF VIRGINIA
JEFFREY D. CHENG
Lic. No. 051900
PROFESSIONAL ENGINEER

Jeffrey D Cheng
2022.07.20 16:19:15 -04'00'

Whitman, Requardt & Associates
Baltimore, Maryland
TRAFFIC ENGINEER

REVISED	STATE	STATE ROUTE	STATE PROJECT	SHEET NO.
	VA.	95	0095-076-299,C-501	16(5)

DESIGN FEATURES RELATING TO CONSTRUCTION OR TO REGULATION AND CONTROL OF TRAFFIC MAY BE SUBJECT TO CHANGE AS DEEMED NECESSARY BY THE DEPARTMENT

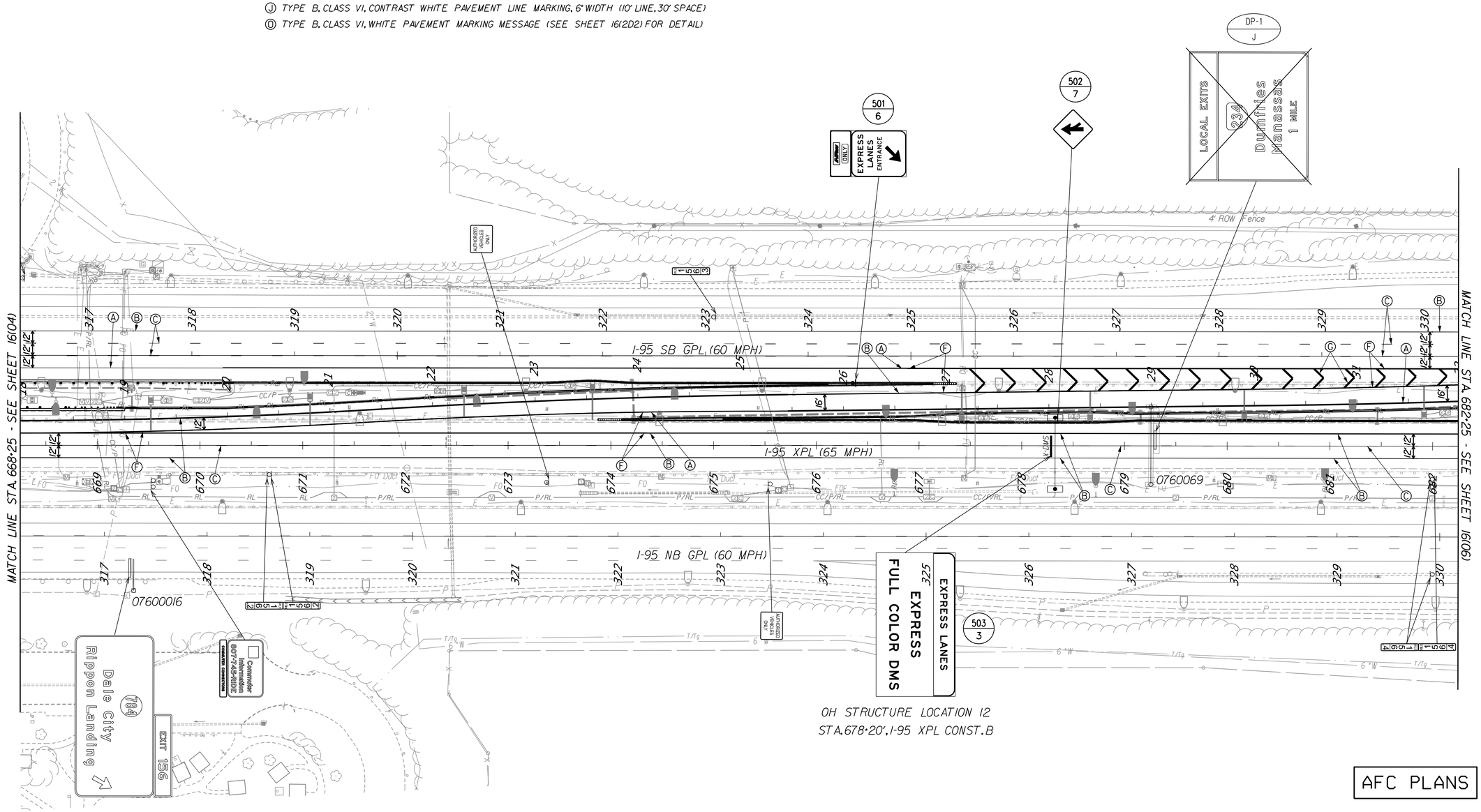

AFC PLANS

SCALE
0 50' 100'

PROJECT	SHEET NO.
0095-076-299	16(5)

Roll Revised 12/11/12

7/20/2022 4589300101G(06).dgn
3:33:01 PM Plotted By: sswearman

LIMITED ACCESS HIGHWAY

By Resolution of the Highway Commission dated October 4, 1956
By Resolution of the Highway Commission dated January 18, 1973
By Resolution of the Commonwealth Transportation Board dated April 19, 2022

PROJECT MANAGER Rimpal Shah, P.E. (703) 259-2362 (NOVA District) _____
SURVEYED BY, DATE H&B Surveying and Mapping, LLC (804) 330-3781, 03/09/2021
DESIGN BY Whitman, Requardt & Associates, LLP (804) 212-8700 _____
SUBSURFACE UTILITY BY, DATE Accumark, Inc. (804) 550-7740, 07/07/2021

COMMONWEALTH OF VIRGINIA
JEFFREY D. CHENG
Lic. No. 051900
PROFESSIONAL ENGINEER

Jeffrey D Cheng
2022.07.20 16:19:37 -04'00'
Whitman, Requardt & Associates
Baltimore, Maryland
TRAFFIC ENGINEER

REVISED	STATE	STATE ROUTE	STATE PROJECT	SHEET NO.
	VA.	95	0095-076-299,C-501	16(6)

DESIGN FEATURES RELATING TO CONSTRUCTION OR TO REGULATION AND CONTROL OF TRAFFIC MAY BE SUBJECT TO CHANGE AS DEEMED NECESSARY BY THE DEPARTMENT

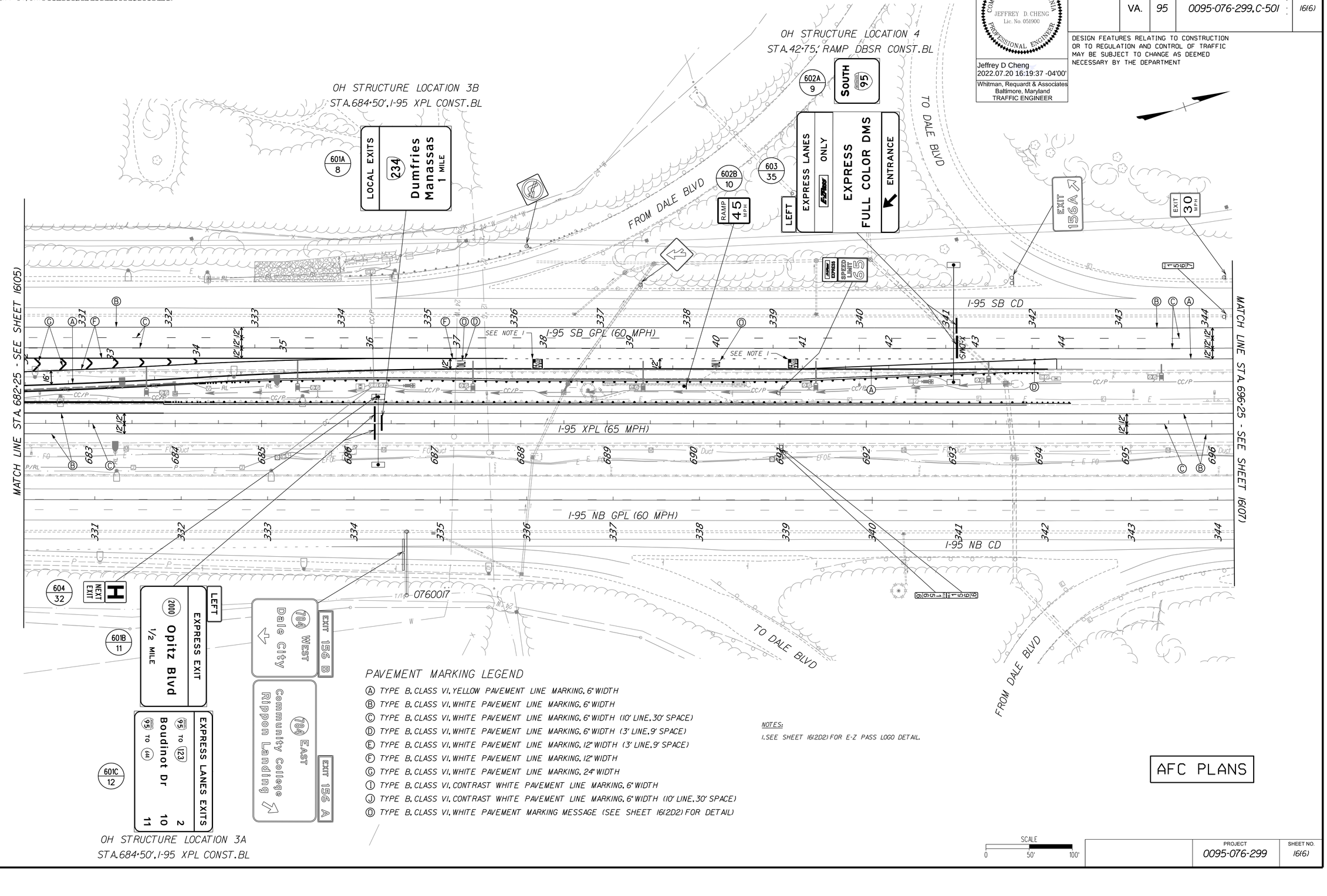

OH STRUCTURE LOCATION 3A
STA.684+50', I-95 XPL CONST.BL

PAVEMENT MARKING LEGEND

- (A) TYPE B, CLASS VI, YELLOW PAVEMENT LINE MARKING, 6" WIDTH
- (B) TYPE B, CLASS VI, WHITE PAVEMENT LINE MARKING, 6" WIDTH
- (C) TYPE B, CLASS VI, WHITE PAVEMENT LINE MARKING, 6" WIDTH (10' LINE, 30' SPACE)
- (D) TYPE B, CLASS VI, WHITE PAVEMENT LINE MARKING, 6" WIDTH (3' LINE, 9' SPACE)
- (E) TYPE B, CLASS VI, WHITE PAVEMENT LINE MARKING, 12" WIDTH (3' LINE, 9' SPACE)
- (F) TYPE B, CLASS VI, WHITE PAVEMENT LINE MARKING, 12" WIDTH
- (G) TYPE B, CLASS VI, WHITE PAVEMENT LINE MARKING, 24" WIDTH
- (I) TYPE B, CLASS VI, CONTRAST WHITE PAVEMENT LINE MARKING, 6" WIDTH
- (J) TYPE B, CLASS VI, CONTRAST WHITE PAVEMENT LINE MARKING, 6" WIDTH (10' LINE, 30' SPACE)
- (D) TYPE B, CLASS VI, WHITE PAVEMENT MARKING MESSAGE (SEE SHEET 16(2D2) FOR DETAIL)

NOTES:

1. SEE SHEET 16(2D2) FOR E-Z PASS LOGO DETAIL.

AFC PLANS

SCALE
0 50' 100'

PROJECT	SHEET NO.
0095-076-299	16(6)

Cell Revised 12/11/12

7/20/2022 4589300101G(07).dgn
3:33:07 PM Plotted By: sswearman

LIMITED ACCESS HIGHWAY By Resolution of the Highway Commission dated October 4, 1956
By Resolution of the Highway Commission dated January 18, 1973
By Resolution of the Commonwealth Transportation Board dated April 19, 2022

PROJECT MANAGER Rimpal Shah, P.E. (703) 259-2362 (NOVA District) _____
SURVEYED BY, DATE H&B Surveying and Mapping, LLC (804) 330-3781, 03/09/2021
DESIGN BY Whitman, Requardt, & Associates, LLP (804) 212-8700 _____.
SUBSURFACE UTILITY BY, DATE Accutark, Inc. (804) 550-7740, 07/07/2021

COMMONWEALTH OF VIRGINIA
JEFFREY D. CHENG
Lic. No. 051900
PROFESSIONAL ENGINEER

Jeffrey D Cheng
2022.07.20 16:19:58 -04'00'

Whitman, Requardt & Associates
Baltimore, Maryland
TRAFFIC ENGINEER

REVISED	STATE	STATE ROUTE	STATE PROJECT	SHEET NO.
	VA.	95	0095-076-299,C-501	16(7)

DESIGN FEATURES RELATING TO CONSTRUCTION OR TO REGULATION AND CONTROL OF TRAFFIC MAY BE SUBJECT TO CHANGE AS DEEMED NECESSARY BY THE DEPARTMENT

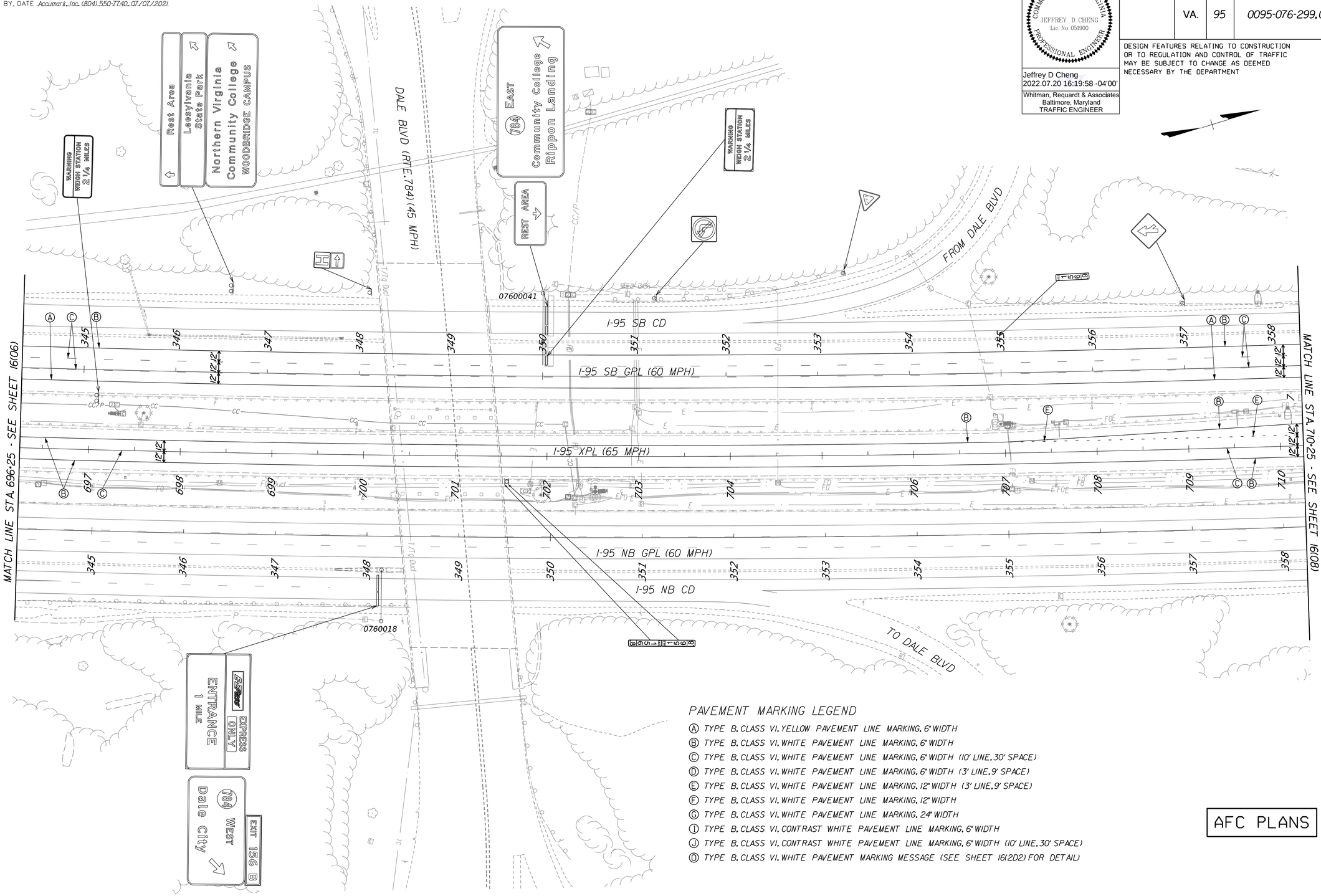

PAVEMENT MARKING LEGEND

- (A) TYPE B, CLASS VI, YELLOW PAVEMENT LINE MARKING, 6" WIDTH
- (B) TYPE B, CLASS VI, WHITE PAVEMENT LINE MARKING, 6" WIDTH
- (C) TYPE B, CLASS VI, WHITE PAVEMENT LINE MARKING, 6" WIDTH (10' LINE, 30' SPACE)
- (D) TYPE B, CLASS VI, WHITE PAVEMENT LINE MARKING, 6" WIDTH (3' LINE, 9' SPACE)
- (E) TYPE B, CLASS VI, WHITE PAVEMENT LINE MARKING, 12" WIDTH (3' LINE, 9' SPACE)
- (F) TYPE B, CLASS VI, WHITE PAVEMENT LINE MARKING, 12" WIDTH
- (G) TYPE B, CLASS VI, WHITE PAVEMENT LINE MARKING, 24" WIDTH
- (I) TYPE B, CLASS VI, CONTRAST WHITE PAVEMENT LINE MARKING, 6" WIDTH
- (J) TYPE B, CLASS VI, CONTRAST WHITE PAVEMENT LINE MARKING, 6" WIDTH (10' LINE, 30' SPACE)
- (O) TYPE B, CLASS VI, WHITE PAVEMENT MARKING MESSAGE (SEE SHEET 16(2D2) FOR DETAIL)

AFC PLANS

SCALE 0 50' 100'

PROJECT	SHEET NO.
0095-076-299	16(7)

Cell Revised 12/11/12

7/20/2022 4589300101 6(08).dgn
3:33:12 PM Plotted By: sswearman

LIMITED ACCESS HIGHWAY By Resolution of the Highway Commission dated October 4, 1956
By Resolution of the Highway Commission dated January 18, 1973
By Resolution of the Commonwealth Transportation Board dated April 19, 2022

PROJECT MANAGER Rimpal Shah, P.E. (703) 259-2362 (NOVA District)
SURVEYED BY, DATE H&B Surveying and Mapping, LLC (804) 330-3781, 03/09/2021
DESIGN BY Whitman, Requardt, & Associates, LLP (804) 272-8700
SUBSURFACE UTILITY BY, DATE Accumark, Inc. (804) 550-7740, 07/07/2021

REVISED	STATE	STATE ROUTE	STATE PROJECT	SHEET NO.
	VA.	95	0095-076-299, C-501	16(8)

COMMONWEALTH OF VIRGINIA
JEFFREY D. CHENG
Lic. No. 051900
PROFESSIONAL ENGINEER

Jeffrey D Cheng
2022.07.20 16:20:18 -04'00'
Whitman, Requardt & Associates
Baltimore, Maryland
TRAFFIC ENGINEER

DESIGN FEATURES RELATING TO CONSTRUCTION OR TO REGULATION AND CONTROL OF TRAFFIC MAY BE SUBJECT TO CHANGE AS DEEMED NECESSARY BY THE DEPARTMENT

PAVEMENT MARKING LEGEND

- Ⓐ TYPE B, CLASS VI, YELLOW PAVEMENT LINE MARKING, 6" WIDTH
- Ⓑ TYPE B, CLASS VI, WHITE PAVEMENT LINE MARKING, 6" WIDTH
- Ⓒ TYPE B, CLASS VI, WHITE PAVEMENT LINE MARKING, 6" WIDTH (10' LINE, 30' SPACE)
- Ⓓ TYPE B, CLASS VI, WHITE PAVEMENT LINE MARKING, 6" WIDTH (3' LINE, 9' SPACE)
- Ⓔ TYPE B, CLASS VI, WHITE PAVEMENT LINE MARKING, 12" WIDTH (3' LINE, 9' SPACE)
- Ⓕ TYPE B, CLASS VI, WHITE PAVEMENT LINE MARKING, 12" WIDTH
- Ⓖ TYPE B, CLASS VI, WHITE PAVEMENT LINE MARKING, 24" WIDTH
- Ⓘ TYPE B, CLASS VI, CONTRAST WHITE PAVEMENT LINE MARKING, 6" WIDTH
- Ⓙ TYPE B, CLASS VI, CONTRAST WHITE PAVEMENT LINE MARKING, 6" WIDTH (10' LINE, 30' SPACE)
- Ⓓ TYPE B, CLASS VI, WHITE PAVEMENT MARKING MESSAGE (SEE SHEET 16(2D2) FOR DETAIL)

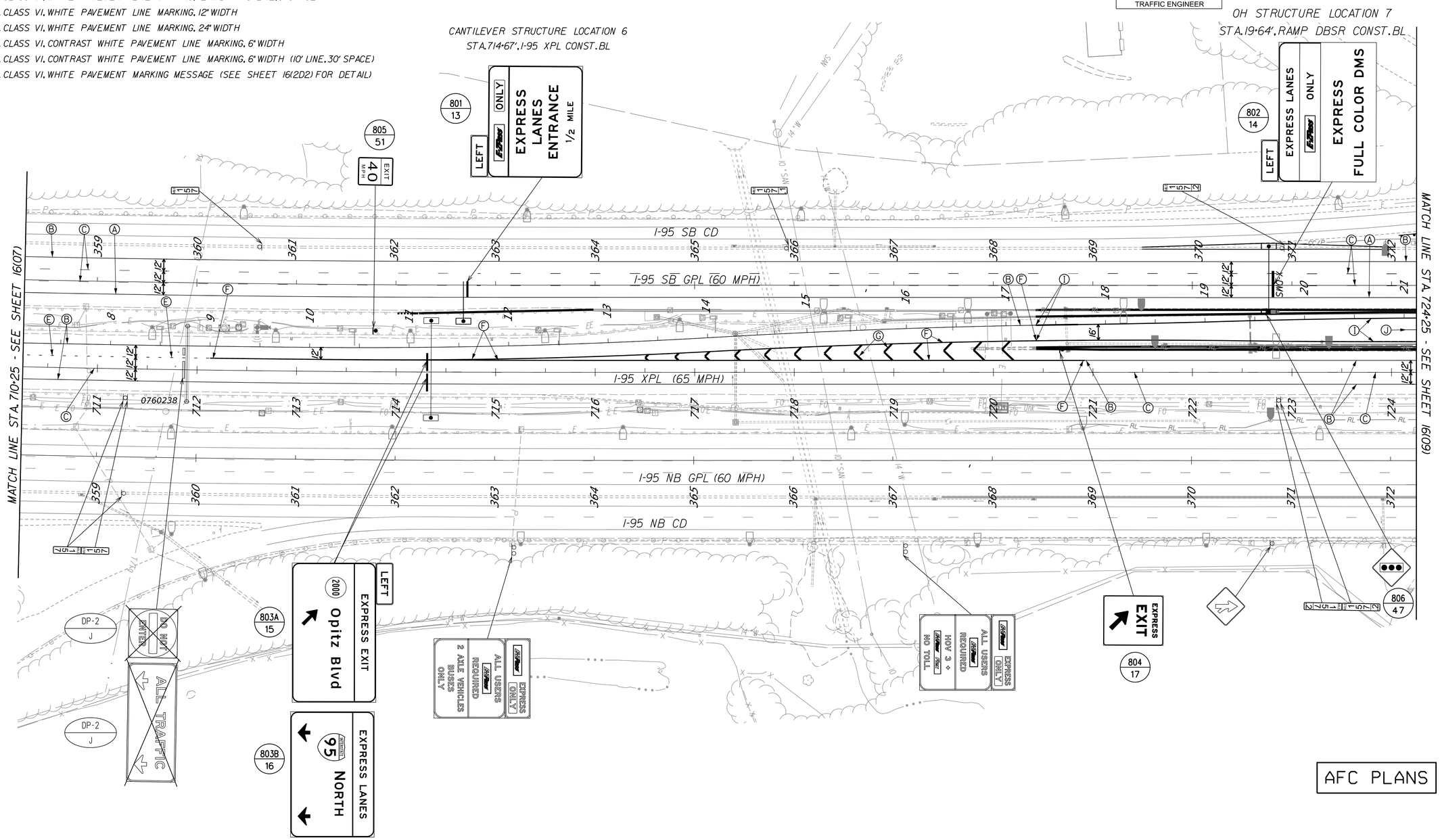

OH STRUCTURE LOCATION 5
STA.714+35', I-95 XPL CONST.BL

AFC PLANS

PROJECT	SHEET NO.
0095-076-299	16(8)

7/20/2022 4589300101G(09).dgn
3:33:15 PM Plotted By: sswearman

LIMITED ACCESS HIGHWAY By Resolution of the Highway Commission dated October 4, 1956
By Resolution of the Highway Commission dated January 18, 1973
By Resolution of the Commonwealth Transportation Board dated April 19, 2022

PROJECT MANAGER Rimpal Shah, P.E. (703) 259-2362 (NOVA District) _____
SURVEYED BY, DATE B&B Surveying and Mapping, LLC (804) 330-3781, 03/09/2021
DESIGN BY Whitman, Requardt, & Associates, LLP (804) 212-8700 _____
SUBSURFACE UTILITY BY, DATE Accumark Inc. (804) 550-7740, 07/07/2021

PAVEMENT MARKING LEGEND

- (A) TYPE B, CLASS VI, YELLOW PAVEMENT LINE MARKING, 6" WIDTH
- (B) TYPE B, CLASS VI, WHITE PAVEMENT LINE MARKING, 6" WIDTH
- (C) TYPE B, CLASS VI, WHITE PAVEMENT LINE MARKING, 6" WIDTH (10' LINE, 30' SPACE)
- (D) TYPE B, CLASS VI, WHITE PAVEMENT LINE MARKING, 6" WIDTH (3' LINE, 9' SPACE)
- (E) TYPE B, CLASS VI, WHITE PAVEMENT LINE MARKING, 12" WIDTH (3' LINE, 9' SPACE)
- (F) TYPE B, CLASS VI, WHITE PAVEMENT LINE MARKING, 12" WIDTH
- (G) TYPE B, CLASS VI, WHITE PAVEMENT LINE MARKING, 24" WIDTH
- (I) TYPE B, CLASS VI, CONTRAST WHITE PAVEMENT LINE MARKING, 6" WIDTH
- (J) TYPE B, CLASS VI, CONTRAST WHITE PAVEMENT LINE MARKING, 6" WIDTH (10' LINE, 30' SPACE)
- (O) TYPE B, CLASS VI, WHITE PAVEMENT MARKING MESSAGE (SEE SHEET 16(2D2) FOR DETAIL)

NOTES:

1. SEE SHEETS NOS. 16(14) THROUGH 16(16) FOR SIGNING AND PAVEMENT MARKING DETAILS ALONG OPITZ BLVD.

2. CONNECTION BOLTS ANCHORED INTO THE CONCRETE BARRIER SHALL BE MECHANICALLY CUT FLUSH WITH THE SURFACE AND REMOVED BY MECHANICAL DRILLING TO A DEPTH OF ONE-HALF INCH BELOW THE SURFACE. THE HOLES SHALL BE PATCHED TO MATCH THE COLOR AND TEXTURE OF THE EXISTING CONCRETE SURFACE WITH HYDRAULIC CEMENT MORTAR OR GROUT CONFORMING TO SECTION 218 OF THE ROAD AND BRIDGE SPECIFICATIONS.

COMMONWEALTH OF VIRGINIA
JEFFREY D. CHENG
Lic. No. 051900
PROFESSIONAL ENGINEER

Jeffrey D Cheng
2022.07.20 16:20:41 -04'00'
Whitman, Requardt & Associates
Baltimore, Maryland
TRAFFIC ENGINEER

REVISED	STATE	STATE ROUTE	STATE PROJECT	SHEET NO.
	VA.	95	0095-076-299,C-501	16(9)

DESIGN FEATURES RELATING TO CONSTRUCTION OR TO REGULATION AND CONTROL OF TRAFFIC MAY BE SUBJECT TO CHANGE AS DEEMED NECESSARY BY THE DEPARTMENT

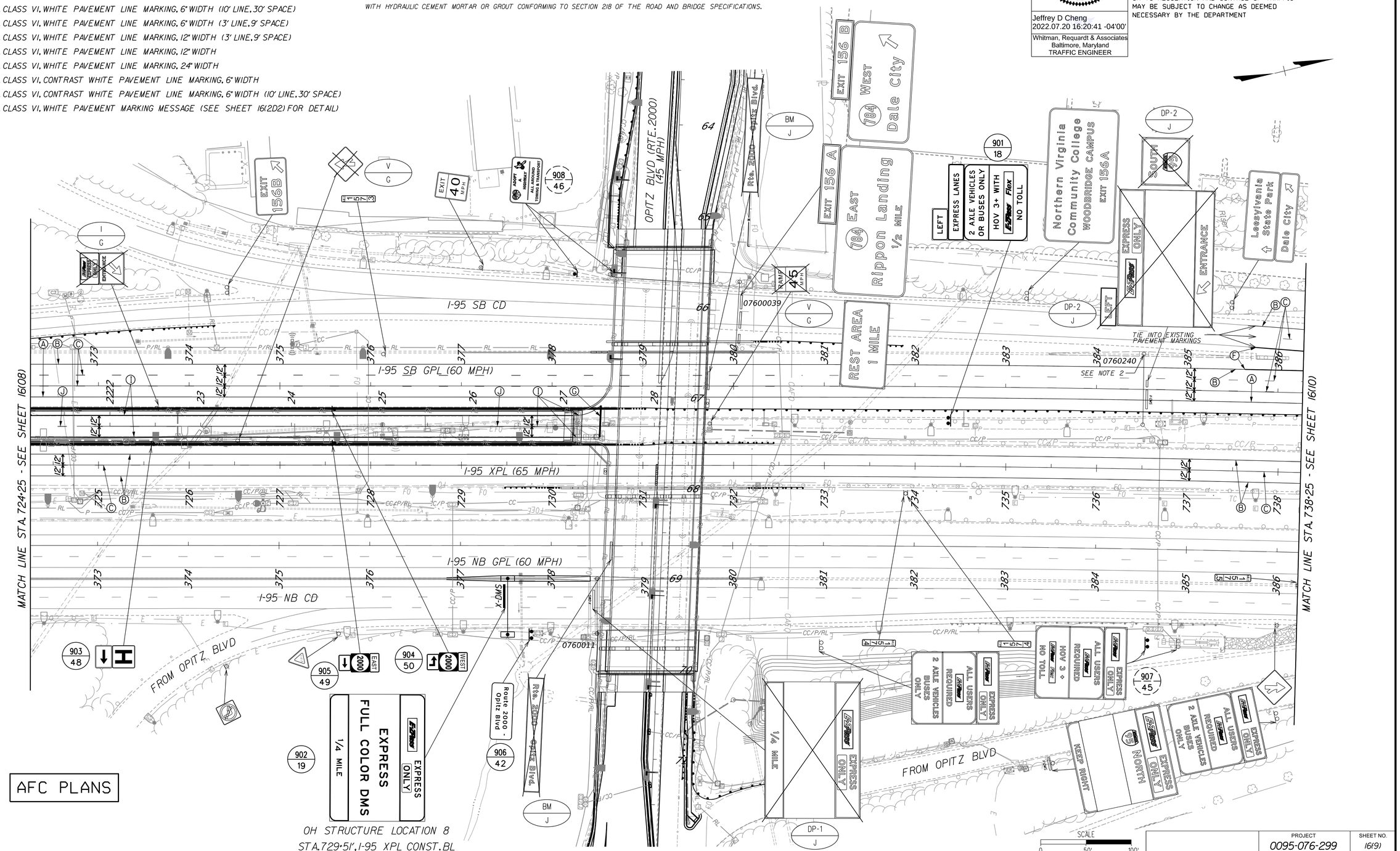

PROJECT	SHEET NO.
0095-076-299	16(9)

Cell Revised 12/11/12

7/20/2022 4589300101611O1.dgn
3:33:18 PM Plotted By: sswearman

LIMITED ACCESS HIGHWAY By Resolution of the Highway Commission dated October 4, 1956.
By Resolution of the Highway Commission dated January 18, 1973.
By Resolution of the Commonwealth Transportation Board dated April 19, 2022

PROJECT MANAGER Rimpal Shah, P.E. (703) 259-2362 (NOVA District) _____
SURVEYED BY, DATE B&B Surveying and Mapping, LLC (804) 330-3781, 03/09/2021
DESIGN BY Whitman, Requardt & Associates, LLP (804) 212-8700 _____
SUBSURFACE UTILITY BY, DATE Accumark, Inc. (804) 550-7740, 07/07/2021

COMMONWEALTH OF VIRGINIA
JEFFREY D. CHENG
Lic. No. 051900
PROFESSIONAL ENGINEER

Jeffrey D Cheng
2022.07.20 16:21:02 -04'00'

Whitman, Requardt & Associates
Baltimore, Maryland
TRAFFIC ENGINEER

REVISED	STATE	STATE ROUTE	STATE PROJECT	SHEET NO.
	VA.	95	0095-076-299,C-501	16(10)

DESIGN FEATURES RELATING TO CONSTRUCTION OR TO REGULATION AND CONTROL OF TRAFFIC MAY BE SUBJECT TO CHANGE AS DEEMED NECESSARY BY THE DEPARTMENT

PAVEMENT MARKING LEGEND

- (A) TYPE B, CLASS VI, YELLOW PAVEMENT LINE MARKING, 6" WIDTH
- (B) TYPE B, CLASS VI, WHITE PAVEMENT LINE MARKING, 6" WIDTH
- (C) TYPE B, CLASS VI, WHITE PAVEMENT LINE MARKING, 6" WIDTH (10' LINE, 30' SPACE)
- (D) TYPE B, CLASS VI, WHITE PAVEMENT LINE MARKING, 6" WIDTH (3' LINE, 9' SPACE)
- (E) TYPE B, CLASS VI, WHITE PAVEMENT LINE MARKING, 12" WIDTH (3' LINE, 9' SPACE)
- (F) TYPE B, CLASS VI, WHITE PAVEMENT LINE MARKING, 12" WIDTH
- (G) TYPE B, CLASS VI, WHITE PAVEMENT LINE MARKING, 24" WIDTH
- (I) TYPE B, CLASS VI, CONTRAST WHITE PAVEMENT LINE MARKING, 6" WIDTH
- (J) TYPE B, CLASS VI, CONTRAST WHITE PAVEMENT LINE MARKING, 6" WIDTH (10' LINE, 30' SPACE)
- (D) TYPE B, CLASS VI, WHITE PAVEMENT MARKING MESSAGE (SEE SHEET 16(2D2) FOR DETAIL)

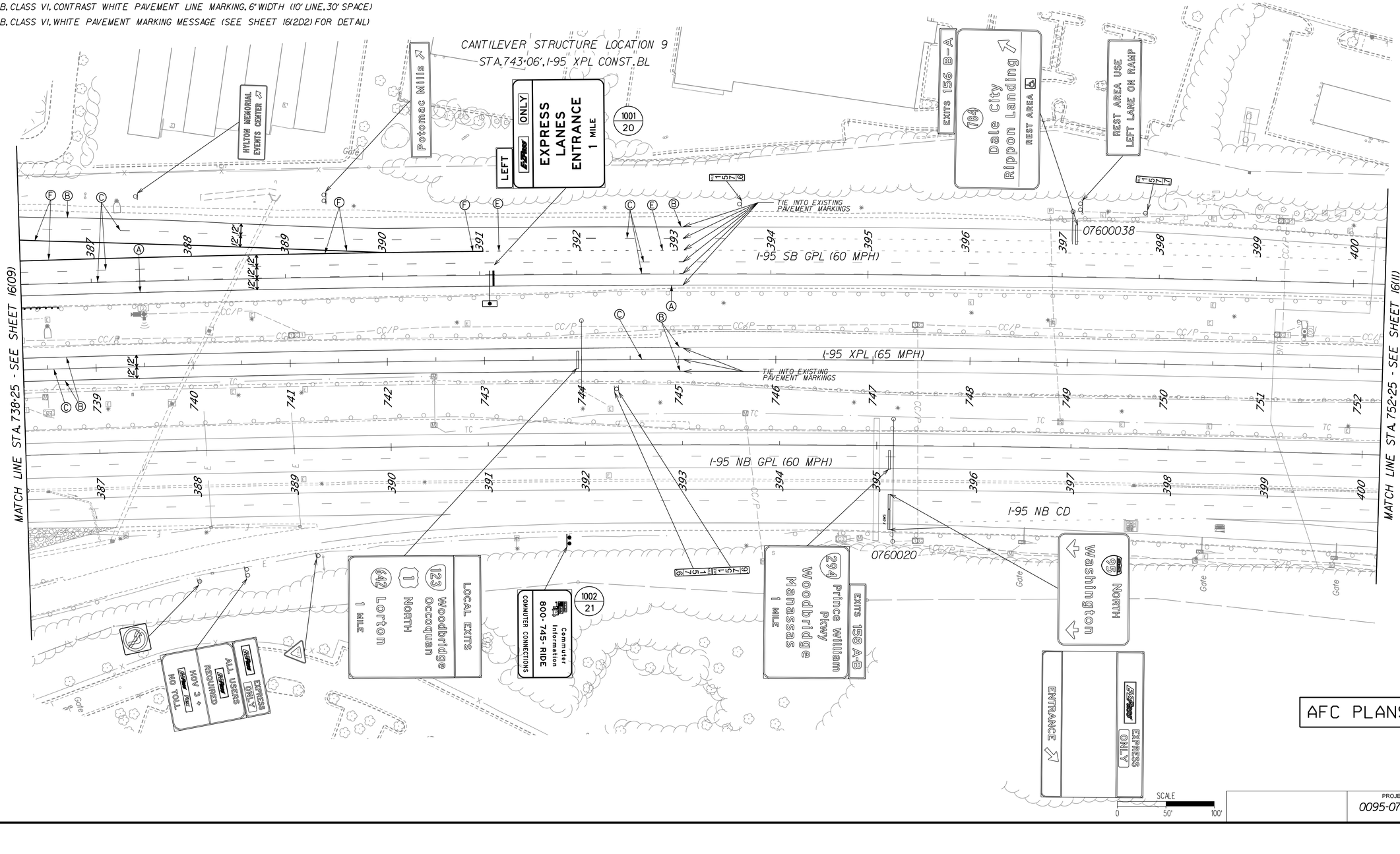

AFC PLANS

PROJECT	SHEET NO.
0095-076-299	16(10)

Civil Revised 12/11/12

7/20/2022 4589300I016(III).dgn
3:33:22 PM Plotted By: sswearman

LIMITED ACCESS HIGHWAY

By Resolution of the Highway Commission dated October 4, 1956
By Resolution of the Highway Commission dated January 18, 1973
By Resolution of the Commonwealth Transportation Board dated April 19, 2022

PROJECT MANAGER Rimpal Shah, P.E. (703) 259-2362 (NOVA District) _____
SURVEYED BY, DATE H&B Surveying and Mapping, LLC (804) 330-3781, 03/09/2021
DESIGN BY Whitman, Requardt, & Associates, LLP (804) 212-8700 _____
SUBSURFACE UTILITY BY, DATE Accumark, Inc. (804) 550-7740, 07/07/2021

COMMONWEALTH OF VIRGINIA
JEFFREY D. CHENG
Lic. No. 051900
PROFESSIONAL ENGINEER

Jeffrey D Cheng
2022.07.20 16:21:22 -04'00'

Whitman, Requardt & Associates
Baltimore, Maryland
TRAFFIC ENGINEER

REVISED	STATE	STATE ROUTE	STATE PROJECT	SHEET NO.
	VA.	95	0095-076-299,C-501	16(11)

DESIGN FEATURES RELATING TO CONSTRUCTION OR TO REGULATION AND CONTROL OF TRAFFIC MAY BE SUBJECT TO CHANGE AS DEEMED NECESSARY BY THE DEPARTMENT

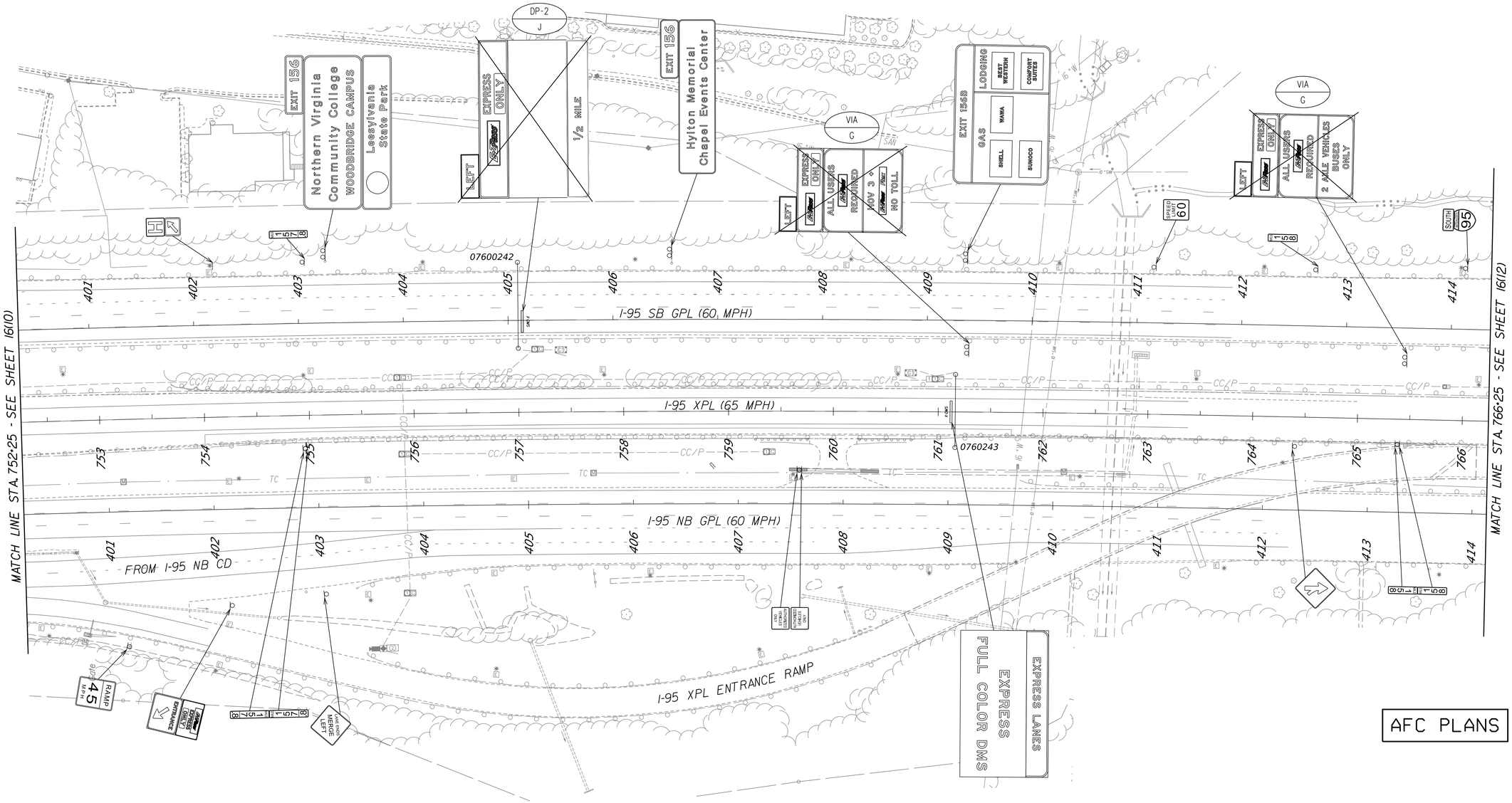

SCALE
0 50' 100'

PROJECT	SHEET NO.
0095-076-299	16(11)

Cell Revised 12/11/12

7/20/2022 4589300101612(12).dgn
3:33:26 PM Plotted By: sswearman

LIMITED ACCESS HIGHWAY

By Resolution of the Highway Commission dated October 4, 1956
By Resolution of the Highway Commission dated January 18, 1973
By Resolution of the Commonwealth Transportation Board dated April 19, 2022

PROJECT MANAGER Rimpal Shah, P.E. (703) 259-2362 (NOVA District) _____
SURVEYED BY, DATE H&B Surveying and Mapping, LLC (804) 330-3781, 03/09/2021
DESIGN BY Whitman, Requardt & Associates, LLP (804) 212-8700 _____
SUBSURFACE UTILITY BY, DATE Accumark, Inc. (804) 550-7740, 07/07/2021

COMMONWEALTH OF VIRGINIA
JEFFREY D. CHENG
Lic. No. 051900
PROFESSIONAL ENGINEER

Jeffrey D Cheng
2022.07.20 16:21:42 -04'00'

Whitman, Requardt & Associates
Baltimore, Maryland
TRAFFIC ENGINEER

REVISED	STATE	STATE ROUTE	STATE PROJECT	SHEET NO.
	VA.	95	0095-076-299,C-501	16(12)

DESIGN FEATURES RELATING TO CONSTRUCTION OR TO REGULATION AND CONTROL OF TRAFFIC MAY BE SUBJECT TO CHANGE AS DEEMED NECESSARY BY THE DEPARTMENT

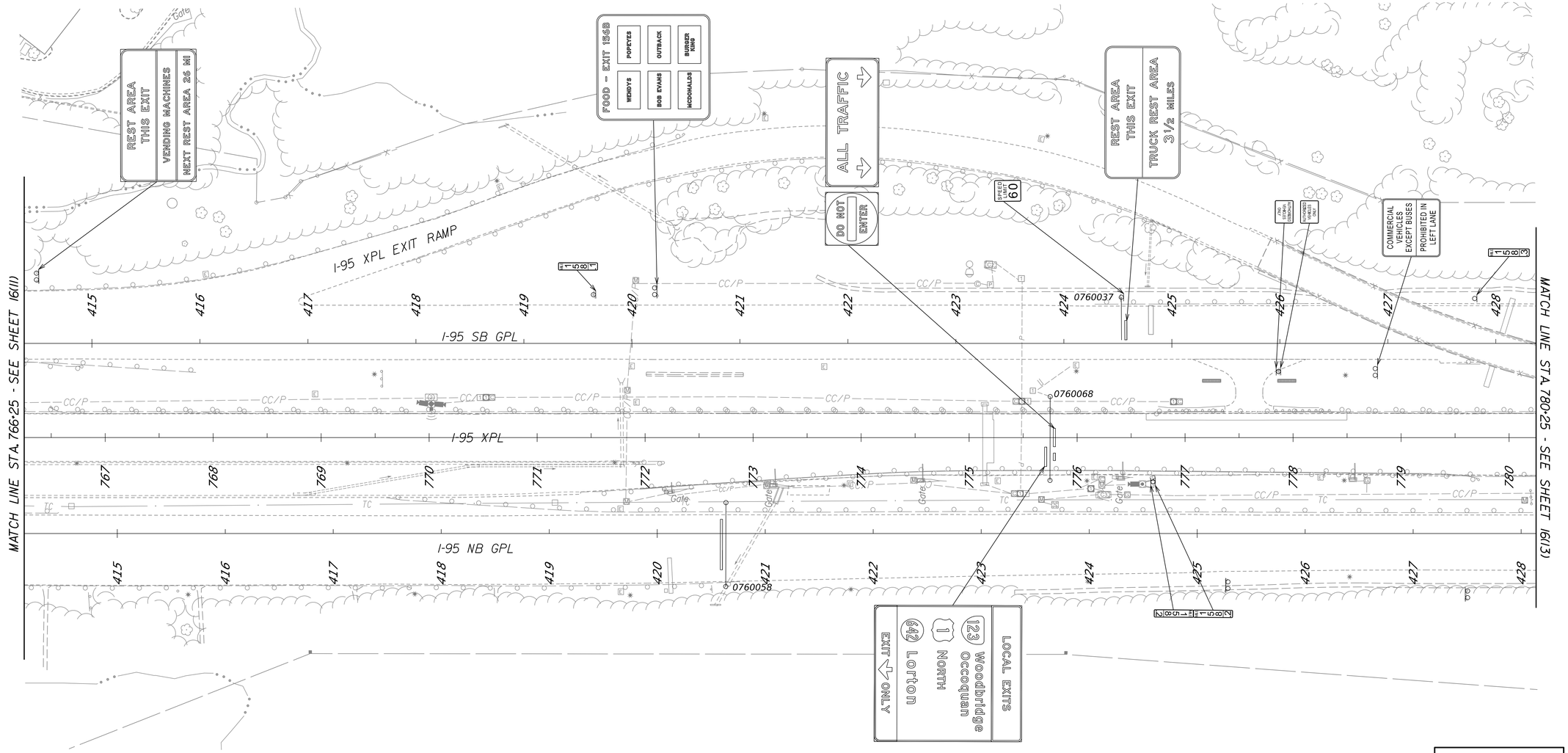

AFC PLANS

SCALE
0 50' 100'

PROJECT	SHEET NO.
0095-076-299	16(12)

Roll Revised 12/11/12

7/20/2022 4589300101613).dgn
3:33:32 PM Plotted By: sswearman

LIMITED ACCESS HIGHWAY By Resolution of the Highway Commission dated October 4, 1956.
By Resolution of the Highway Commission dated January 18, 1973.
By Resolution of the Commonwealth Transportation Board dated April 19, 2022

PROJECT MANAGER Rimpal Shah, P.E. (703) 259-2362 (NOVA District) _____
SURVEYED BY, DATE H&B Surveying and Mapping, LLC (804) 330-3781, 03/09/2021
DESIGN BY Whitman, Requardt, & Associates, LLP (804) 212-8700 _____
SUBSURFACE UTILITY BY, DATE Accutrack, Inc. (804) 550-7740, 07/07/2021

COMMONWEALTH OF VIRGINIA
JEFFREY D. CHENG
Lic. No. 051900
PROFESSIONAL ENGINEER

Jeffrey D Cheng
2022.07.20 16:21:59 -04'00'

Whitman, Requardt & Associates
Baltimore, Maryland
TRAFFIC ENGINEER

REVISED	STATE	STATE ROUTE	STATE PROJECT	SHEET NO.
	VA.	95	0095-076-299,C-501	16(13)

DESIGN FEATURES RELATING TO CONSTRUCTION OR TO REGULATION AND CONTROL OF TRAFFIC MAY BE SUBJECT TO CHANGE AS DEEMED NECESSARY BY THE DEPARTMENT

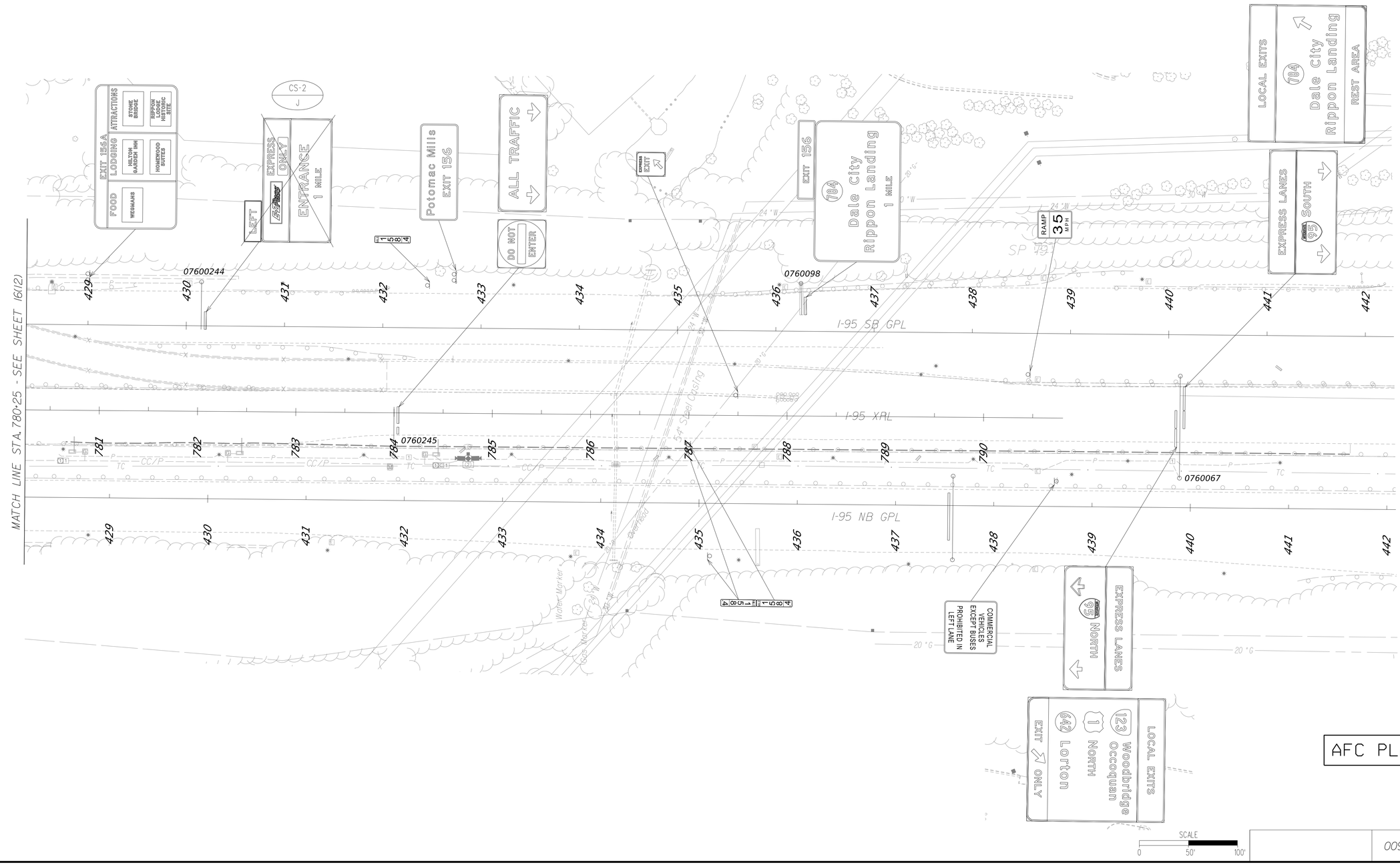

AFC PLANS

PROJECT	SHEET NO.
0095-076-299	16(13)

Cell Revised 12/IV/12

7/20/2022 4589300101616(14).dgn
3:33:46 PM Plotted By: sswearman

LIMITED ACCESS HIGHWAY By Resolution of the Highway Commission dated October 4, 1956.
By Resolution of the Highway Commission dated January 18, 1973.
By Resolution of the Commonwealth Transportation Board dated April 19, 2022

PROJECT MANAGER Rimpal Shah, P.E. (703) 259-2362 (NOVA District) _____
SURVEYED BY, DATE H&B Surveying and Mapping, LLC (804) 330-3781, 03/09/2021
DESIGN BY Whitman, Requardt, & Associates, LLP (804) 212-8700 _____.
SUBSURFACE UTILITY BY, DATE Accumark, Inc. (804) 550-7740, 07/07/2021

COMMONWEALTH OF VIRGINIA
JEFFREY D. CHENG
Lic. No. 051900
PROFESSIONAL ENGINEER

Jeffrey D Cheng
2022.07.20 16:22:20 -04'00'

Whitman, Requardt & Associates
Baltimore, Maryland
TRAFFIC ENGINEER

REVISED	STATE	STATE ROUTE	STATE PROJECT	SHEET NO.
	VA.	95	0095-076-299,C-501	16(14)

DESIGN FEATURES RELATING TO CONSTRUCTION OR TO REGULATION AND CONTROL OF TRAFFIC MAY BE SUBJECT TO CHANGE AS DEEMED NECESSARY BY THE DEPARTMENT

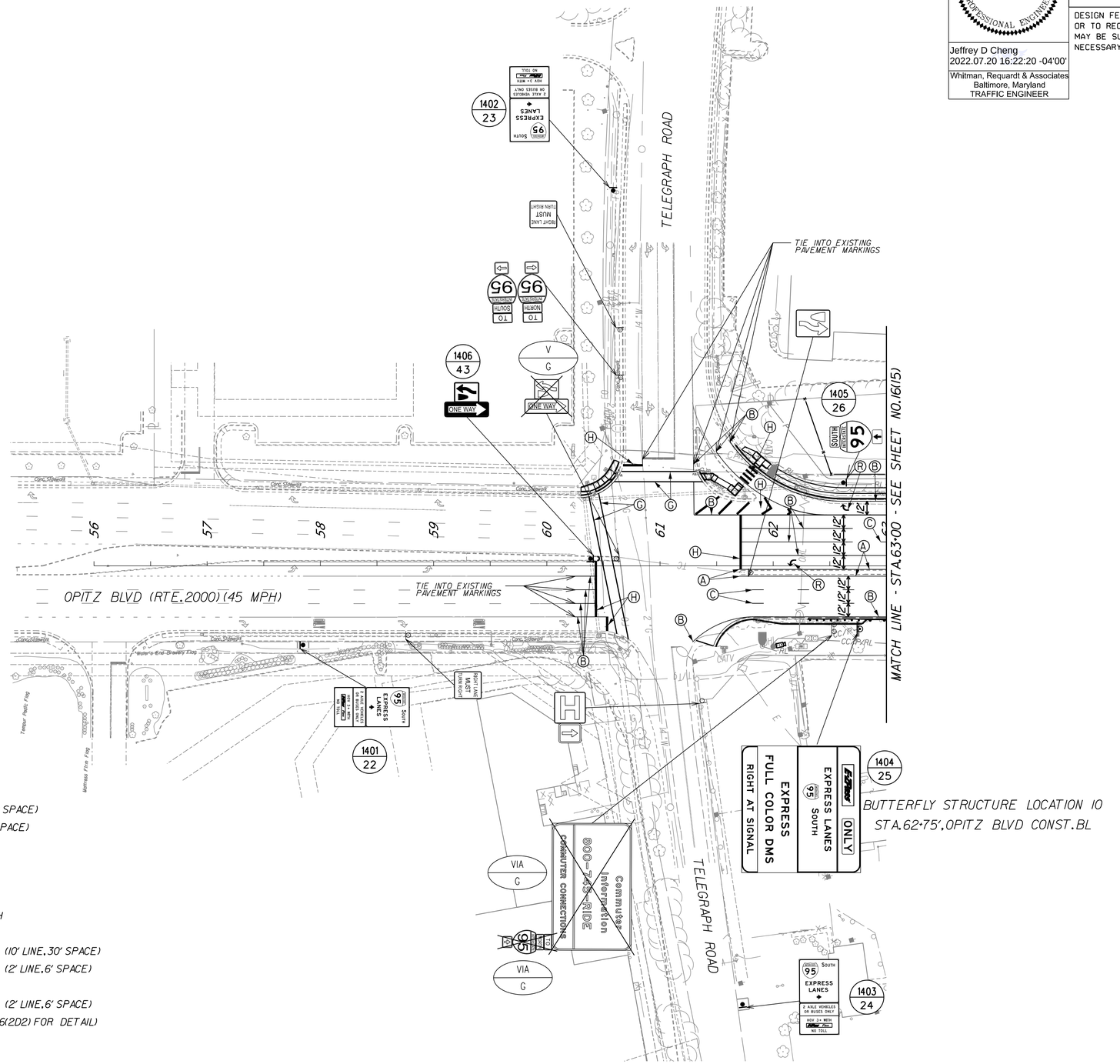

PAVEMENT MARKING LEGEND

- Ⓐ TYPE B, CLASS I, YELLOW PAVEMENT LINE MARKING, 4" WIDTH
- Ⓑ TYPE B, CLASS I, WHITE PAVEMENT LINE MARKING, 4" WIDTH
- Ⓒ TYPE B, CLASS I, WHITE PAVEMENT LINE MARKING, 4" WIDTH (10' LINE, 30' SPACE)
- Ⓓ TYPE B, CLASS I, WHITE PAVEMENT LINE MARKING, 4" WIDTH (2' LINE, 6' SPACE)
- Ⓔ TYPE B, CLASS I, WHITE PAVEMENT LINE MARKING, 8" WIDTH
- Ⓕ TYPE B, CLASS VI, WHITE PAVEMENT LINE MARKING, 24" WIDTH
- Ⓖ TYPE B, CLASS II, WHITE PAVEMENT LINE MARKING, 6" WIDTH
- Ⓗ TYPE B, CLASS II, WHITE PAVEMENT LINE MARKING, 24" WIDTH
- Ⓘ TYPE B, CLASS VI, CONTRAST YELLOW PAVEMENT LINE MARKING, 4" WIDTH
- Ⓙ TYPE B, CLASS VI, CONTRAST WHITE PAVEMENT LINE MARKING, 4" WIDTH
- Ⓚ TYPE B, CLASS VI, CONTRAST WHITE PAVEMENT LINE MARKING, 4" WIDTH (10' LINE, 30' SPACE)
- Ⓛ TYPE B, CLASS VI, CONTRAST WHITE PAVEMENT LINE MARKING, 4" WIDTH (2' LINE, 6' SPACE)
- Ⓜ TYPE B, CLASS VI, CONTRAST WHITE PAVEMENT LINE MARKING, 8" WIDTH
- Ⓝ TYPE B, CLASS VI, CONTRAST WHITE PAVEMENT LINE MARKING, 8" WIDTH (2' LINE, 6' SPACE)
- Ⓞ TYPE B, CLASS VI, WHITE PAVEMENT MARKING MESSAGE (SEE SHEET 16(2D2) FOR DETAIL)
- Ⓟ TYPE B, CLASS VI, WHITE PAVEMENT MARKING SYMBOL
- Ⓠ TYPE B, CLASS II, WHITE PAVEMENT MARKING MESSAGE
- Ⓡ TYPE B, CLASS II, WHITE PAVEMENT MARKING SYMBOL

AFC PLANS

SCALE 0 50' 100'

PROJECT	SHEET NO.
0095-076-299	16(14)

Cell Revised 12/11/12

LIMITED ACCESS HIGHWAY By Resolution of the Highway Commission dated October 4, 1956.
By Resolution of the Highway Commission dated January 18, 1973.
By Resolution of the Commonwealth Transportation Board dated April 19, 2022

PROJECT MANAGER Rimpal Shah, P.E. (703) 259-2362 (NOVA District)
SURVEYED BY, DATE B&B Surveying and Mapping, LLC (804) 330-3781, 03/09/2021
DESIGN BY Whitman, Requardt, & Associates, LLP (804) 212-8700
SUBSURFACE UTILITY BY, DATE Accumark, Inc. (804) 550-7740, 07/07/2021

NOTES:
1. SEE SHEET NO.16(9) FOR SIGNING ALONG I-95 LANES.
2. SEE SHEET 16(2D2) FOR E-ZPASS LOGO DETAIL
3. CONTRACTOR SHALL COORDINATE THE INSTALLATION OF PAVEMENT MARKINGS FOR THE I-95 NORTHBOUND RAMP WITH PRINCE WILLIAM COUNTY'S NEABSCO-POTOMAC GARAGE PROJECT.

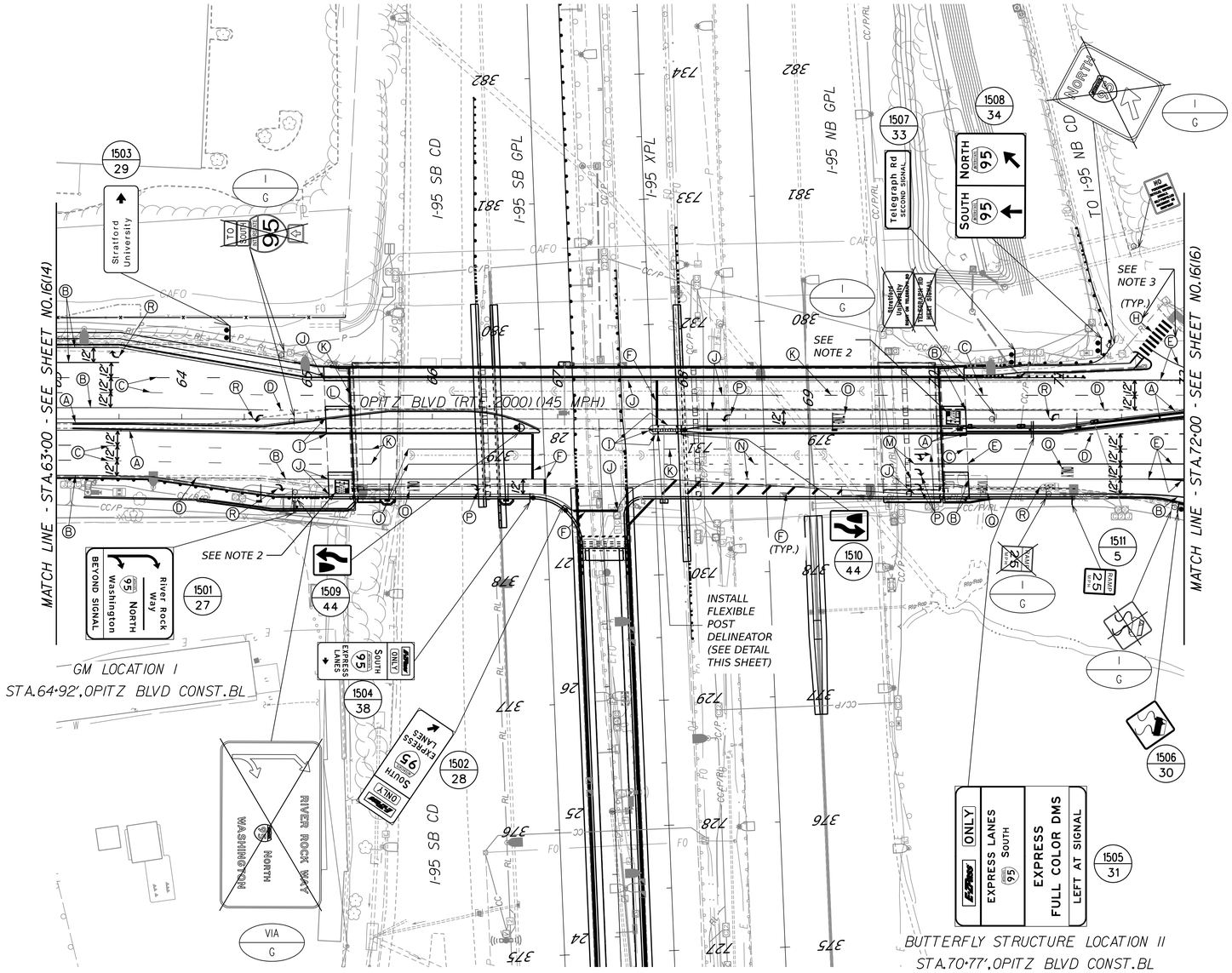

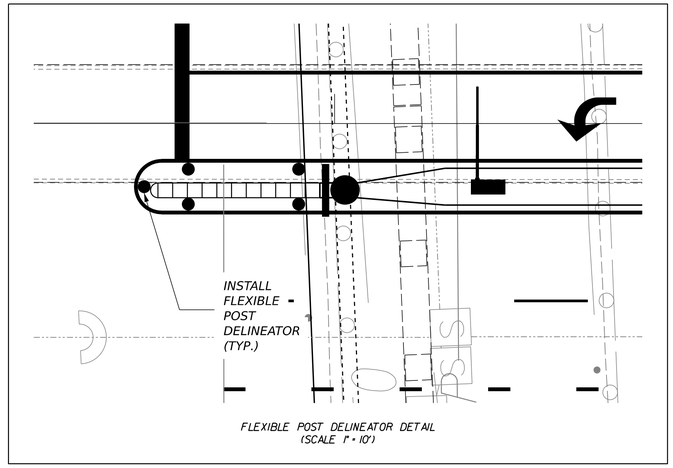

FLEXIBLE POST DELINEATOR DETAIL
(SCALE 1" = 10')

PAVEMENT MARKING LEGEND

- (A) TYPE B, CLASS I, YELLOW PAVEMENT LINE MARKING, 4" WIDTH
- (B) TYPE B, CLASS I, WHITE PAVEMENT LINE MARKING, 4" WIDTH
- (C) TYPE B, CLASS I, WHITE PAVEMENT LINE MARKING, 4" WIDTH (10' LINE, 30' SPACE)
- (D) TYPE B, CLASS I, WHITE PAVEMENT LINE MARKING, 4" WIDTH (2' LINE, 6' SPACE)
- (E) TYPE B, CLASS I, WHITE PAVEMENT LINE MARKING, 8" WIDTH
- (F) TYPE B, CLASS VI, WHITE PAVEMENT LINE MARKING, 24" WIDTH
- (G) TYPE B, CLASS II, WHITE PAVEMENT LINE MARKING, 6" WIDTH
- (H) TYPE B, CLASS II, WHITE PAVEMENT LINE MARKING, 24" WIDTH
- (I) TYPE B, CLASS VI, CONTRAST YELLOW PAVEMENT LINE MARKING, 4" WIDTH
- (J) TYPE B, CLASS VI, CONTRAST WHITE PAVEMENT LINE MARKING, 4" WIDTH
- (K) TYPE B, CLASS VI, CONTRAST WHITE PAVEMENT LINE MARKING, 4" WIDTH (10' LINE, 30' SPACE)
- (L) TYPE B, CLASS VI, CONTRAST WHITE PAVEMENT LINE MARKING, 4" WIDTH (2' LINE, 6' SPACE)
- (M) TYPE B, CLASS VI, CONTRAST WHITE PAVEMENT LINE MARKING, 8" WIDTH
- (N) TYPE B, CLASS VI, CONTRAST WHITE PAVEMENT LINE MARKING, 8" WIDTH (2' LINE, 6' SPACE)
- (O) TYPE B, CLASS VI, WHITE PAVEMENT MARKING MESSAGE (SEE SHEET 16(2D2) FOR DETAIL)
- (P) TYPE B, CLASS VI, WHITE PAVEMENT MARKING SYMBOL
- (Q) TYPE B, CLASS II, WHITE PAVEMENT MARKING MESSAGE
- (R) TYPE B, CLASS II, WHITE PAVEMENT MARKING SYMBOL

COMMONWEALTH OF VIRGINIA
JEFFREY D. CHENG
Lic. No. 051900
PROFESSIONAL ENGINEER

Jeffrey D Cheng
2022.07.20 16:22:44 -04'00'

Whitman, Requardt & Associates
Baltimore, Maryland
TRAFFIC ENGINEER

REVISED	STATE	STATE ROUTE	STATE PROJECT	SHEET NO.
	VA.	95	0095-076-299,C-501	16(15)

DESIGN FEATURES RELATING TO CONSTRUCTION OR TO REGULATION AND CONTROL OF TRAFFIC MAY BE SUBJECT TO CHANGE AS DEEMED NECESSARY BY THE DEPARTMENT

AFC PLANS

SCALE 0 50' 100'

PROJECT	SHEET NO.
0095-076-299	16(15)

7/20/2022 4589300101616(16).dgn
3:33:53 PM Plotted By: sswearman

LIMITED ACCESS HIGHWAY By Resolution of the Highway Commission dated October 4, 1956.
By Resolution of the Highway Commission dated January 18, 1973.
By Resolution of the Commonwealth Transportation Board dated April 19, 2022

PROJECT MANAGER: Rimpal Shah, P.E. (703) 259-2362 (NOVA District)
SURVEYED BY, DATE: B&B Surveying and Mapping, LLC (804) 330-3781, 03/09/2021
DESIGN BY: Whitman, Requardt & Associates, LLP (804) 212-8700
SUBSURFACE UTILITY BY, DATE: Accutrack, Inc. (804) 550-7740, 07/07/2021

COMMONWEALTH OF VIRGINIA
JEFFREY D. CHENG
Lic. No. 051900
PROFESSIONAL ENGINEER

Jeffrey D Cheng
2022.07.20 16:23:05 -04'00'

Whitman, Requardt & Associates
Baltimore, Maryland
TRAFFIC ENGINEER

REVISED	STATE	STATE ROUTE	STATE PROJECT	SHEET NO.
	VA.	95	0095-076-299,C-501	16(16)

DESIGN FEATURES RELATING TO CONSTRUCTION OR TO REGULATION AND CONTROL OF TRAFFIC MAY BE SUBJECT TO CHANGE AS DEEMED NECESSARY BY THE DEPARTMENT

NOTES:
1. CONTRACTOR SHALL COORDINATE THE INSTALLATION OF PAVEMENT MARKINGS FOR THE I-95 NORTHBOUND ON RAMP WITH PRINCE WILLIAM COUNTY'S NEABSCO-POTOMAC GARAGE PROJECT.

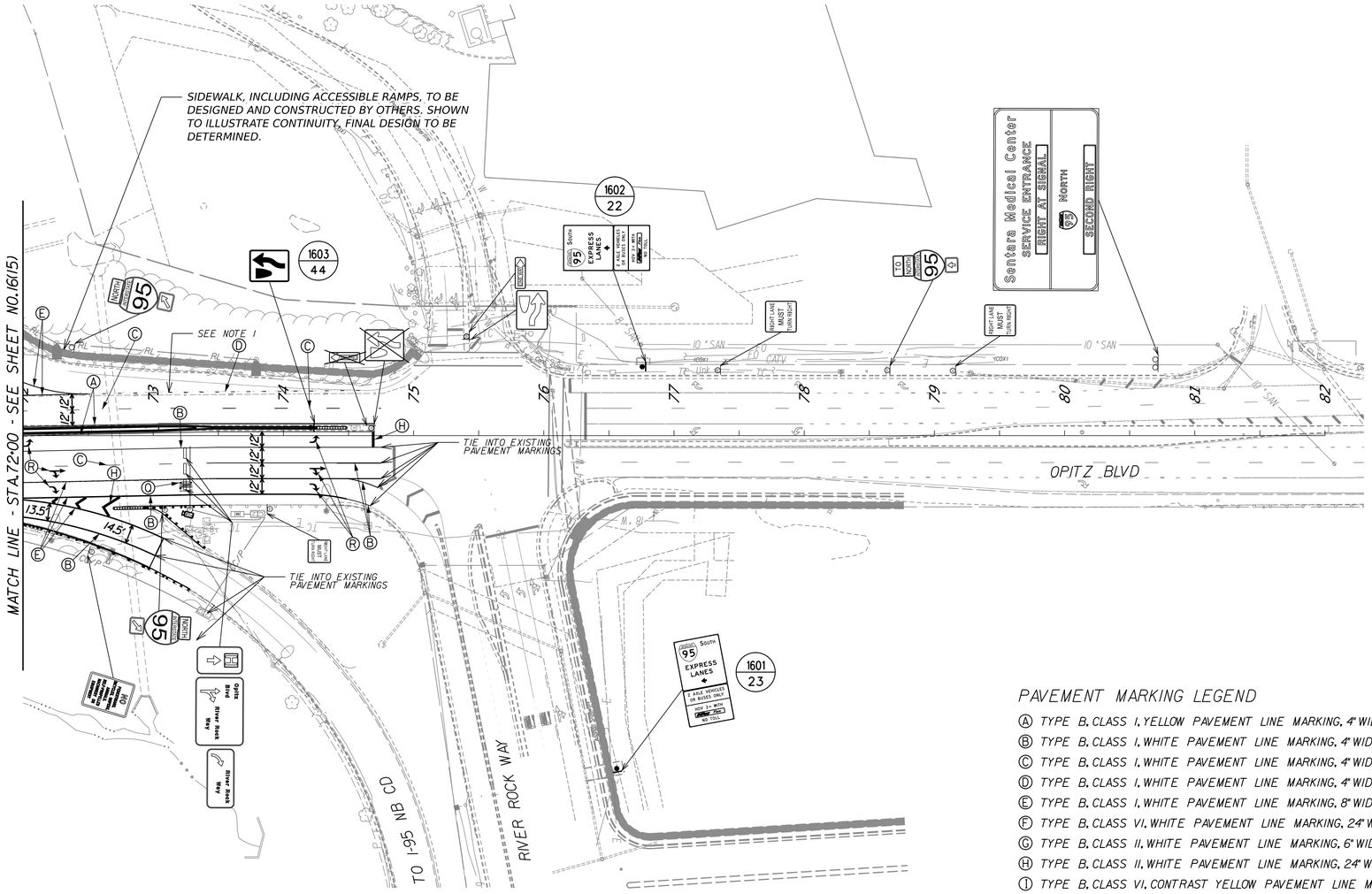

PAVEMENT MARKING LEGEND

- (A) TYPE B, CLASS I, YELLOW PAVEMENT LINE MARKING, 4" WIDTH
- (B) TYPE B, CLASS I, WHITE PAVEMENT LINE MARKING, 4" WIDTH
- (C) TYPE B, CLASS I, WHITE PAVEMENT LINE MARKING, 4" WIDTH (10' LINE, 30' SPACE)
- (D) TYPE B, CLASS I, WHITE PAVEMENT LINE MARKING, 4" WIDTH (2' LINE, 6' SPACE)
- (E) TYPE B, CLASS I, WHITE PAVEMENT LINE MARKING, 8" WIDTH
- (F) TYPE B, CLASS VI, WHITE PAVEMENT LINE MARKING, 24" WIDTH
- (G) TYPE B, CLASS II, WHITE PAVEMENT LINE MARKING, 6" WIDTH
- (H) TYPE B, CLASS II, WHITE PAVEMENT LINE MARKING, 24" WIDTH
- (I) TYPE B, CLASS VI, CONTRAST YELLOW PAVEMENT LINE MARKING, 4" WIDTH
- (J) TYPE B, CLASS VI, CONTRAST WHITE PAVEMENT LINE MARKING, 4" WIDTH
- (K) TYPE B, CLASS VI, CONTRAST WHITE PAVEMENT LINE MARKING, 4" WIDTH (10' LINE, 30' SPACE)
- (L) TYPE B, CLASS VI, CONTRAST WHITE PAVEMENT LINE MARKING, 4" WIDTH (2' LINE, 6' SPACE)
- (M) TYPE B, CLASS VI, CONTRAST WHITE PAVEMENT LINE MARKING, 8" WIDTH
- (N) TYPE B, CLASS VI, CONTRAST WHITE PAVEMENT LINE MARKING, 8" WIDTH (2' LINE, 6' SPACE)
- (O) TYPE B, CLASS VI, WHITE PAVEMENT MARKING MESSAGE (SEE SHEET 16(2D2) FOR DETAIL)
- (P) TYPE B, CLASS VI, WHITE PAVEMENT MARKING SYMBOL
- (Q) TYPE B, CLASS II, WHITE PAVEMENT MARKING MESSAGE
- (R) TYPE B, CLASS II, WHITE PAVEMENT MARKING SYMBOL

AFC PLANS

SCALE 0 50' 100'

PROJECT	SHEET NO.
0095-076-299	16(16)

Cell Revised 12/1/12

7/19/2022 10:12:19 AM — 4589300101G(17).dgn — Plotted By: sswearman

PROJECT MANAGER: Rimpal Shah, P.E. (703) 259-2362 (NOVA District)
SURVEYED BY, DATE: H&B Surveying and Mapping, LLC (804) 330-3781, 03/09/2021
DESIGN BY: Whitman, Requardt & Associates, LLP (804) 212-8700
SUBSURFACE UTILITY BY, DATE: Accumark, Inc. (804) 550-7740, 07/07/2021

COMMONWEALTH OF VIRGINIA
JEFFREY D. CHENG
Lic. No. 051900
PROFESSIONAL ENGINEER

Jeffrey D Cheng
2022.07.20 16:23:33 -04'00'

Whitman, Requardt & Associates
Baltimore, Maryland
TRAFFIC ENGINEER

REVISED	STATE	STATE ROUTE	STATE PROJECT	SHEET NO.
	VA.	95	0095-076-299,C-501	16(17)

DESIGN FEATURES RELATING TO CONSTRUCTION OR TO REGULATION AND CONTROL OF TRAFFIC MAY BE SUBJECT TO CHANGE AS DEEMED NECESSARY BY THE DEPARTMENT

AFC PLANS

SCALE 0 100' 200'

PROJECT	SHEET NO.
0095-076-299	16(17)

Roll Revised 12/11/12

7/19/2022 4589300101616(18).dgn
10:13:05 AM Plotted By: sswearman

PROJECT MANAGER Rimpal Shah, P.E. (703) 259-2362 (NOVA District) _____
SURVEYED BY, DATE H&B Surveying and Mapping, LLC (804) 330-3781, 03/09/2021
DESIGN BY Whitman, Requardt, & Associates, LLP (804) 212-8700 _____.
SUBSURFACE UTILITY BY, DATE Accumark, Inc. (804) 550-7740, 07/07/2021

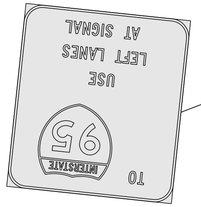

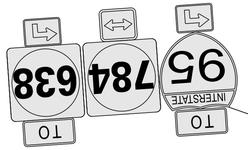

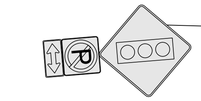

REVISED	STATE	STATE ROUTE	STATE PROJECT	SHEET NO.
	VA.	95	0095-076-299,C-501	16(18)

COMMONWEALTH OF VIRGINIA
JEFFREY D. CHENG
Lic. No. 051900
PROFESSIONAL ENGINEER

Jeffrey D Cheng
2022.07.20 16:23:59 -04'00'

Whitman, Requardt & Associates
Baltimore, Maryland
TRAFFIC ENGINEER

DESIGN FEATURES RELATING TO CONSTRUCTION OR TO REGULATION AND CONTROL OF TRAFFIC MAY BE SUBJECT TO CHANGE AS DEEMED NECESSARY BY THE DEPARTMENT

AFC PLANS

SCALE
0 100' 200'

PROJECT	SHEET NO.
0095-076-299	16(18)

All Revised 12/1/12

7/19/2022 4589300101616(19).dgn
10:13:46 AM Plotted By: sswearman

PROJECT MANAGER Rimpal Shah, P.E. (703) 259-2362 (NOVA District) _____
SURVEYED BY, DATE H&B Surveying and Mapping, LLC (804) 330-3781, 03/09/2021
DESIGN BY Whitman, Requardt, & Associates, LLP (804) 212-8700 _____.
SUBSURFACE UTILITY BY, DATE Accumark, Inc. (804) 550-7740, 07/07/2021

COMMONWEALTH OF VIRGINIA
JEFFREY D. CHENG
Lic. No. 051900
PROFESSIONAL ENGINEER

Jeffrey D Cheng
2022.07.20 16:24:28 -04'00'

Whitman, Requardt & Associates
Baltimore, Maryland
TRAFFIC ENGINEER

REVISED	STATE	STATE ROUTE	STATE PROJECT	SHEET NO.
	VA.	95	0095-076-299,C-501	16(19)

DESIGN FEATURES RELATING TO CONSTRUCTION OR TO REGULATION AND CONTROL OF TRAFFIC MAY BE SUBJECT TO CHANGE AS DEEMED NECESSARY BY THE DEPARTMENT

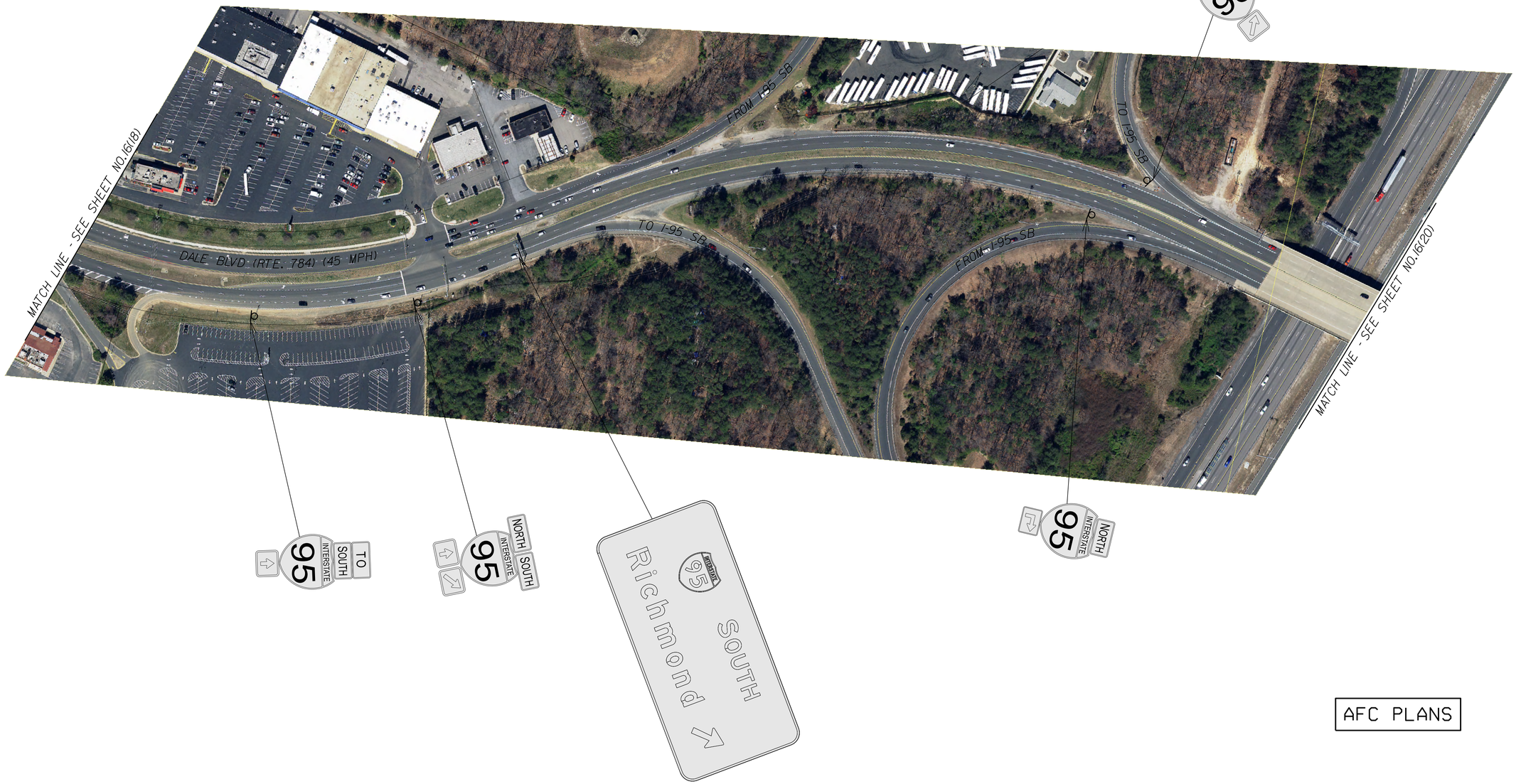

AFC PLANS

SCALE
0 100' 200'

PROJECT	SHEET NO.
0095-076-299	16(19)

Cell Revised 12/11/12

7/19/2022 4589300101 6(20).dgn
10:14:23 AM Plotted By: sswearman

PROJECT MANAGER Rimpal Shah, P.E. (703) 259-2362 (NOVA District)
SURVEYED BY, DATE H&B Surveying and Mapping, LLC (804) 330-3781, 03/09/2021
DESIGN BY Whitman, Requardt, & Associates, LLP (804) 272-8700
SUBSURFACE UTILITY BY, DATE Accumark, Inc. (804) 550-7740, 07/07/2021

COMMONWEALTH OF VIRGINIA
JEFFREY D. CHENG
Lic. No. 051900
PROFESSIONAL ENGINEER

Jeffrey D Cheng
2022.07.20 16:24:49 -04'00'
Whitman, Requardt & Associates
Baltimore, Maryland
TRAFFIC ENGINEER

REVISED	STATE	STATE ROUTE	STATE PROJECT	SHEET NO.
	VA.	95	0095-076-299,C-501	16(20)

DESIGN FEATURES RELATING TO CONSTRUCTION OR TO REGULATION AND CONTROL OF TRAFFIC MAY BE SUBJECT TO CHANGE AS DEEMED NECESSARY BY THE DEPARTMENT

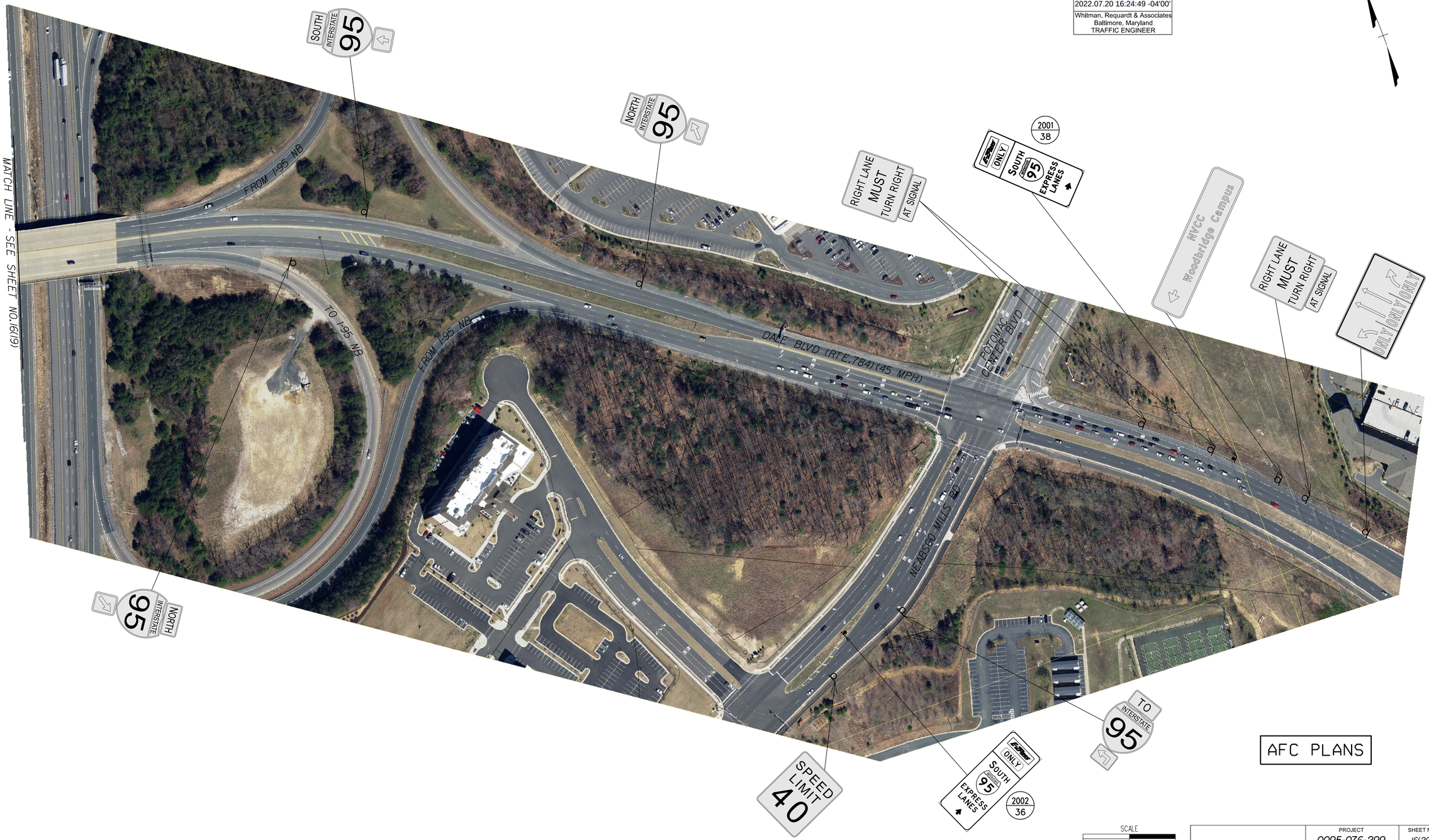

AFC PLANS

SCALE
0 100' 200'

PROJECT	SHEET NO.
0095-076-299	16(20)

Cell Revised 12/11/12

7/19/2022 4589300101G(21).dgn
10:15:07 AM Plotted By: sswearman

PROJECT MANAGER Rimpal Shah, P.E. (703) 259-2362 (NOVA District) _____
SURVEYED BY, DATE H&B Surveying and Mapping, LLC (804) 330-3781, 03/09/2021
DESIGN BY Whitman, Requardt, & Associates, LLP (804) 212-8700 _____.
SUBSURFACE UTILITY BY, DATE Accumark, Inc. (804) 550-7740, 07/07/2021

COMMONWEALTH OF VIRGINIA
JEFFREY D. CHENG
Lic. No. 051900
PROFESSIONAL ENGINEER

Jeffrey D Cheng
2022.07.20 16:25:13 -04'00'

Whitman, Requardt & Associates
Baltimore, Maryland
TRAFFIC ENGINEER

REVISED	STATE	STATE ROUTE	STATE PROJECT	SHEET NO.
	VA.	95	0095-076-299,C-501	16(21)

DESIGN FEATURES RELATING TO CONSTRUCTION OR TO REGULATION AND CONTROL OF TRAFFIC MAY BE SUBJECT TO CHANGE AS DEEMED NECESSARY BY THE DEPARTMENT

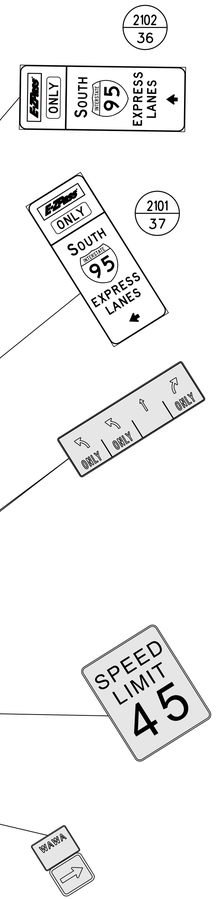

AFC PLANS

SCALE
0 100' 200'

PROJECT	SHEET NO.
0095-076-299	16(21)

Cell Revised 12/11/12

7/20/2022 4589300101I7(01).dgn
2:38:02 PM Plotted By: sswearman

LIMITED ACCESS HIGHWAY By Resolution of the Highway Commission dated October 4, 1956.
By Resolution of the Highway Commission dated January 18, 1973.
By Resolution of the Commonwealth Transportation Board dated April 19, 2022

PROJECT MANAGER Rimpal Shah, P.E. (703) 259-2362 (NOVA District)
SURVEYED BY, DATE H&B Surveying and Mapping, LLC (804) 330-3781, 03/09/2021
DESIGN BY Whitman, Requardt, & Associates, LLP (804) 212-8700
SUBSURFACE UTILITY BY, DATE Accumark, Inc. (804) 550-7740, 07/07/2021

COMMONWEALTH OF VIRGINIA
JEFFREY D. CHENG
Lic. No. 051900
PROFESSIONAL ENGINEER

Jeffrey D Cheng
2022.07.20 17:00:09 -04'00'

Whitman, Requardt & Associates
Baltimore, Maryland
TRAFFIC ENGINEER

REVISED	STATE	STATE ROUTE	STATE PROJECT	SHEET NO.
	VA.	95	0095-076-299,C-501	I7(1)

DESIGN FEATURES RELATING TO CONSTRUCTION OR TO REGULATION AND CONTROL OF TRAFFIC MAY BE SUBJECT TO CHANGE AS DEEMED NECESSARY BY THE DEPARTMENT

LIGHTING KEY PLAN

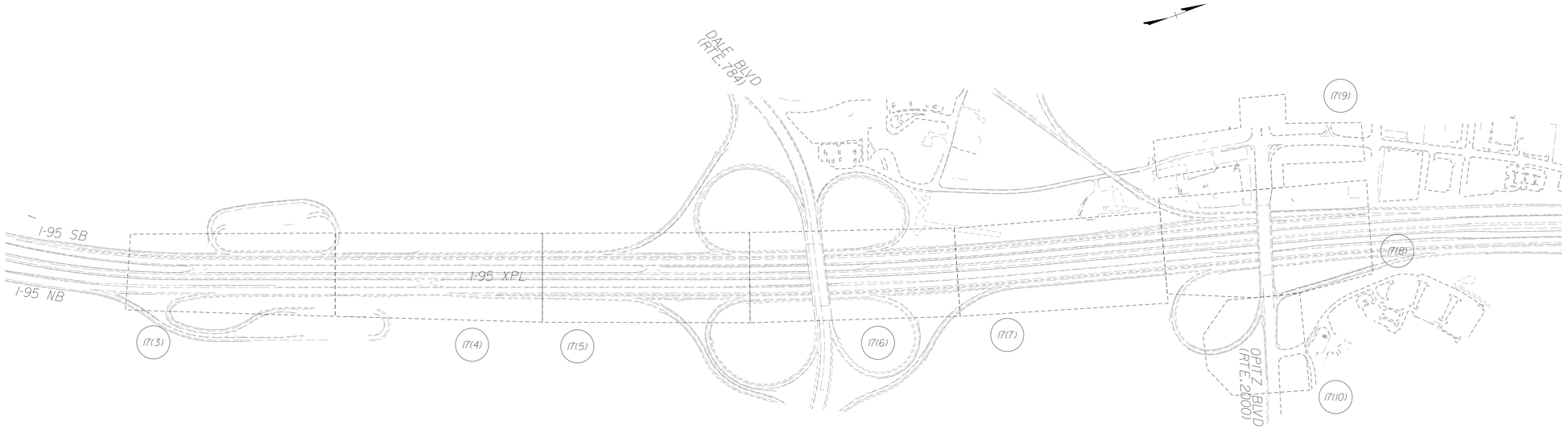

LIGHTING LEGEND

EXISTING	PROPOSED	DESCRIPTION
		STD. LP-2 CONVENTIONAL LIGHT POLE AND LUMINAIRE ON FOUNDATION
		STD. LP-2 CONVENTIONAL LIGHT POLE AND LUMINAIRE ON BARRIER/STRUCTURE MOUNTED SUPPORT
		SIGNAL POLE MOUNTED LUMINAIRE AND ARM
		STD. LP-1 CONVENTIONAL LIGHT POLE ON FOUNDATION WITH LUMINAIRE
		UTILITY POLE MOUNTED LEASED LUMINAIRE AND ARM
		HIGH MAST POLE WITH LUMINAIRES
		UNDERPASS LUMINAIRE
		EMBEDDED JUNCTION CHAMBER IN STRUCTURE/BARRIER
E	E	EXPRESS LANES LIGHTING JUNCTION BOX (JB-R2 UNLESS OTHERWISE NOTED)
V	V	VDOT LIGHTING JUNCTION BOX (JB-R2 UNLESS OTHERWISE NOTED)
	S	LIGHTING JUNCTION BOX MOUNTED ON STRUCTURE
CCW	CCW	CONTROL CENTER (SERVICE PANEL)
SE	SE	METERED ELECTRICAL SERVICE
-P-	-RL-	ROADWAY LIGHTING CONDUIT
-E-		ROADWAY LIGHTING/ITS CONDUIT
		STRUCTURE MOUNTED LIGHTING CONDUIT
		OVERHEAD SIGN STRUCTURE

ACTIONS

- A — EXISTING LIGHTING EQUIPMENT/INFRASTRUCTURE TO BE REMOVED (LIGHT POLES, LUMINARES, FOUNDATIONS, JUNCTION BOXES).
- U — EXISTING LUMINAIRE TO BE UPGRADED TO LED.
- A — EXISTING ROADWAY LIGHTING CONDUIT WITH CABLES TO BE REMOVED AND CONDUIT TO BE ABANDONED.
- L — EXISTING UTILITY POLE MOUNTED LEASED LUMINAIRE, ARM, AND UTILITY POLE TO BE REMOVED BY NOVEC.

LUMINAIRE CALLOUT INFORMATION

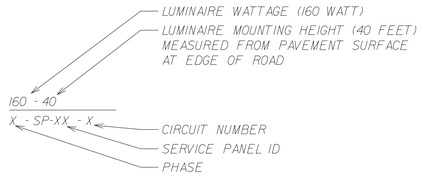

POLE CALLOUT INFORMATION

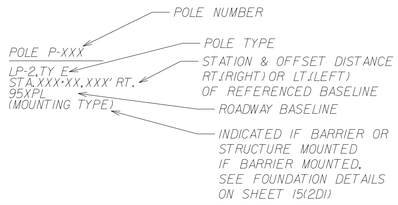

SHEET INDEX

I7(1)	LIGHTING KEY PLAN, SHEET INDEX, LEGEND, CALLOUT INFORMATION
I7(2)	LIGHTING GENERAL NOTES
I7(2A)	LUMINAIRE DETAILS
I7(2B1) - I7(2B3)	PHOTOMETRIC CALCULATIONS
I7(2C1) - I7(2C3)	ONE LINE DIAGRAMS
I7(2C4) - I7(2C6)	PANELBOARD SCHEDULES
I7(2D1)	FOUNDATION IN BARRIER DETAIL
I7(2D2)	CONDUIT & JUNCTION CHAMBER IN BARRIER DETAIL
I7(3) - I7(10)	PLAN SHEETS

AFC PLANS

	PROJECT	SHEET NO.
	0095-076-299	I7(1)

Cell Revised 12/11/12

LIMITED ACCESS HIGHWAY By Resolution of the Highway Commission dated October 4, 1956.
By Resolution of the Highway Commission dated January 18, 1973.
By Resolution of the Commonwealth Transportation Board dated April 19, 2022

PROJECT MANAGER: Rimpal Shah, P.E. (703) 259-2362 (NOVA District)
SURVEYED BY, DATE: E&B Surveying and Mapping, LLC (804) 330-3781, 03/09/2021
DESIGN BY: Whitman, Requardt & Associates, LLP (804) 212-8700
SUBSURFACE UTILITY BY, DATE: Accutark, Inc. (804) 550-7740, 07/07/2021

COMMONWEALTH OF VIRGINIA
JEFFREY D. CHENG
Lic. No. 051900
PROFESSIONAL ENGINEER

Jeffrey D Cheng
2022.07.20 17:04:22 -04'00'

Whitman, Requardt & Associates
Baltimore, Maryland
TRAFFIC ENGINEER

REVISED	STATE	STATE ROUTE	STATE PROJECT	SHEET NO.
	VA.	95	0095-076-299,C-501	I7(2)

DESIGN FEATURES RELATING TO CONSTRUCTION OR TO REGULATION AND CONTROL OF TRAFFIC MAY BE SUBJECT TO CHANGE AS DEEMED NECESSARY BY THE DEPARTMENT

LIGHTING GENERAL NOTES

GENERAL NOTES:

1. THE EXISTING UNDERGROUND UTILITIES AND STORM SEWERS ARE NOT SHOWN IN THEIR EXACT LOCATION AND MAY NOT BE COMPLETE. ALL UTILITIES SHALL BE MARKED PRIOR TO INITIATION OF CONSTRUCTION. ARRANGE FOR MISS UTILITY TO MARK UNDERGROUND UTILITIES. IN ADDITION, CONTACT VDOT TO MARK VDOT'S CABLES AND CONDUITS, PROVIDING TWO WORKING DAYS' NOTICE.

   FOR VDOT UTILITY MARKINGS CONTACT:
   LARRY POSEY
   OFFICE: (703) 334-0878
   MOBILE: (804) 931-8795
   LARRY.POSEY@VDOT.VIRGINIA.GOV

   INFORMATION NEEDED TO REQUEST VDOT UTILITY MARKINGS WILL BE PROVIDED BY LARRY.

2. CONDUIT SHALL BE DIRECTIONALLY BORED WHERE THE PLANS SHOW BORED CONDUIT.

3. CONDUIT SHOWN AS TRENCHED MAY BE BORED ONLY WITH THE APPROVAL OF THE PROJECT ENGINEER.

4. CONDUIT RUNS SHOWN ON THE PLANS ARE DIAGRAMMATIC. THE CONDUIT SHALL BE STAKED OUT USING ELECTRONIC COORDINATE DATA TO BE PROVIDED BY 95 EXPRESS LANES. FINAL LAYOUT OF CONDUIT AND JUNCTION BOXES SHALL BE ADJUSTED IN THE FIELD AS NEEDED TO CONFORM TO FIELD CONDITIONS AND UTILITIES, AS MARKED.

5. CONTRACTOR SHALL FIELD VERIFY LOCATIONS OF ALL EXISTING MANHOLES AND JUNCTION BOXES BEFORE COMMENCING ANY WORK WITH THEM. IN CASE THE JUNCTION BOXES COULD NOT BE VERIFIED OR ARE NOT IN PLACE AS SHOWN IN PLANS, CONTACT THE 95 EXPRESS LANES ENGINEER FOR FURTHER ACTION.

6. ALL CONDUITS SHALL BE INSTALLED FOLLOWING STD. ECI-1 UNLESS OTHERWISE NOTED. THE REQUIRED DEPTH OF THE TRENCH IS MEASURED FROM THE LOW POINT OF THE SLOPE ABOVE.

7. USE EXISTING CONDUIT STUB-OUTS WHERE AVAILABLE IN LIEU OF INSTALLING NEW CONDUIT INTO EXISTING MANHOLES, JUNCTION BOXES, AND FOUNDATIONS.

8. USE FRE CONDUIT FOR EXPOSED HORIZONTAL RUNS ON BRIDGES, RIGID GALVANIZED STEEL (RGS) CONDUIT FOR OTHER EXPOSED RUNS, PVC CONDUIT FOR TRENCH RUNS, RGS CONDUIT FOR RUNS BETWEEN SERVICE PANEL AND CLOSEST JUNCTION BOX, AND HDPE CONDUIT FOR BORED RUNS.

9. THE CONTRACTOR SHALL COORDINATE ALL WORK WITH OTHER CONTRACTORS TO AVOID CONFLICTS WITH OTHER WORK. CONDUITS SHALL AVOID BRIDGE PIERS, ABUTMENTS, GUARDRAILS, FOUNDATIONS, AND OTHER CIVIL WORKS.

10. A MINIMUM 2' SEPARATION SHALL BE MAINTAINED BETWEEN THE TRENCH RUNNING LINE AND EXISTING/PROPOSED GUARDRAIL.

11. CONDUITS AT MSE WALL SHALL BE COORDINATED WITH MSE WALL INSTALLER.

12. DIRECTIONAL BORING UNDER ROADWAY SHALL BE AT A MINIMUM DEPTH OF 5' BELOW SURFACE ELEVATION.

13. DE-WATER ALL EXISTING JUNCTION BOXES BEFORE PERFORMING ANY WORK INSIDE THEM.

14. VERIFY THE DEPTH OF ALL EXISTING UNDERGROUND UTILITIES AT LOCATIONS WHERE PROPOSED CONDUIT BORE OR TRENCH IS CROSSING TO AVOID ANY DISRUPTION TO THE EXISTING UNDERGROUND UTILITIES.

15. AVOID IMPACTING ANY EXISTING UNDERDRAIN SYSTEMS AT LOCATIONS WHERE PROPOSED CONDUIT BORE OR TRENCH IS CROSSING.

16. EXISTING CABLES SHALL BE SAFELY ABANDONED PER INDUSTRY STANDARDS AND AS SHOWN ON THE PLANS. ABANDONED CABLES SHALL BE REMOVED IN THE FIELD.

17. THE EQUIPMENT GROUNDING CONDUCTOR (EGC) SHALL BE SIZED TO MATCH THE LARGEST CONDUCTOR IN ANY LIGHTING CIRCUIT.

18. THE CONTRACTOR SHALL PROVIDE ELEVATIONS AT THE TOP OF EACH LIGHT POLE FOUNDATION TO THE 95 EXPRESS LANES ENGINEER FOR REVIEW PRIOR TO ORDERING ANY NEW LIGHT POLES OR REMOVING ANY EXISTING LIGHT POLES FOR RELOCATION TO NEW FOUNDATIONS. THE 95 EXPRESS LANES ENGINEER WILL REVIEW ELEVATION DATA AGAINST LIGHTING CALCULATIONS TO ENSURE FINISHED GRADES AND FOUNDATION ELEVATIONS ARE SUITABLE FOR LIGHT POLE LENGTHS AS DESIGNED.

19. INSTALLED LUMINAIRE MOUNTING HEIGHTS FOR PROPOSED POLES SHOWN ON THE PLANS SHALL BE ADHERED TO WITHIN A TOLERANCE OF 1 FT AND IN NO CASE LESS THAN THE MOUNTING HEIGHT SHOWN.

20. ALL INFRASTRUCTURE FOR RELOCATED OR REPLACEMENT LIGHT POLES SHALL BE INSTALLED, CONNECTED AND TESTED BEFORE EXISTING POLES ARE TAKEN OUT OF SERVICE.

21. ALL NEW LIGHT POLES THROUGHOUT THE PROJECT SHALL BE PROVIDED WITH NON-CORROSIVE, METALLIC IDENTIFICATION TAGS, SIZED AS REQUIRED, BEARING THE POLE OWNER: VDOT OR XPL; THE THICKNESS AND LENGTH OF THE POLE; THE CIRCUIT NUMBER AND PHASE; AND A SIX-DIGIT NUMBER (FIRST 3 DIGITS INDICATE THE NUMBER OF THE SERVICE PANEL FROM WHICH THE POLE IS FED AND THE SECOND THREE ARE THE SEQUENTIAL NUMBERS (I-N) OF THE POLES FED FROM EACH SERVICE PANEL). THE INDENTIFICATION TAGS SHALL BE ARRANGED AS FOLLOWS:

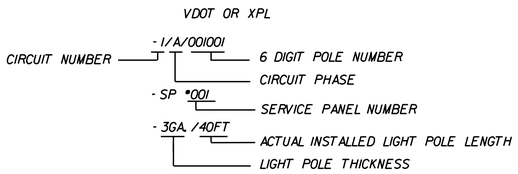

22. THE CONTRACTOR SHALL COORDINATE WITH THE OWNER TO VERIFY SERVICE PANEL AND LIGHT POLE NUMBERS. SERVICE PANEL AND LIGHT POLE NUMBERS SHOWN ON THE PLANS ARE CONSTRUCTION NUMBERS AND ARE NOT NECESSARILY THE PERMANENT PANEL OR POLE ID.

23. POLE NUMBERS SHALL BE COORDINATED WITH THE POLE OWNER TO ACCOUNT FOR EXISTING POLES ON THE CIRCUIT THAT WILL NOT BE MODIFIED BY THE PROJECT.

24. ALL LIGHT POLES SHALL BE PROVIDED WITH INDIVIDUAL NUMBER IDENTIFICATION DECALS PLACED ABOVE THE IDENTIFICATION TAG FACING THE DIRECTION OF APPROACHING TRAFFIC AND FORMATTED AS FOLLOWS:

    3 DIGIT SERVICE PANEL NUMBER TO BE PLACED HORIZONTALLY
    3 DIGIT POLE NUMBER TO BE PLACED VERTICALLY
    EXAMPLE: 001
    0
    0
    1

25. FOR LIGHTING CIRCUITS CONNECTED TO VDOT SERVICE PANELS, JUNCTION BOX LIDS SHALL BE LABELED "VDOT ELEC". FOR LIGHTING CIRCUITS CONNECTED TO 95 EXPRESS SERVICE PANELS, JUNCTION BOXES SHALL BE LABELED "XPL ELEC".

26. THE FOUNDATIONS OF ALL EXISTING LIGHT POLES DESIGNATED TO BE REMOVED SHALL BE REMOVED TO A DEPTH OF 2 FEET BELOW FINISHED GRADE AND BACKFILLED.

27. THE CONTRACTOR/VENDOR SHALL PROVIDE A 10 YEAR MINIMUM WARRANTY AGAINST ANY FAILURE RESULTING FROM MATERIALS AND DEFECTS OF THE LUMINAIRES, IN ACCORDANCE WITH VDOT'S SPECIAL PROVISION FOR LIGHT EMITTING DIODE (LED) LUMINAIRES.

28. ALL PROPOSED LIGHTING JUNCTION BOXES FOR VDOT OR 95 EXPRESS SHALL BE STD. JB-R2 UNLESS OTHERWISE NOTED ON THE PLANS.

29. TERMINATE CONDUITS DESIGNATED FOR LIGHTING INTO JUNCTION BOXES DESIGNATED FOR LIGHTING.

30. THE CONTRACTOR SHALL FIELD VERIFY LIGHTING CIRCUITS PRIOR TO ABANDONING ELECTRICAL CONDUCTORS AS SHOWN ON THE PLANS. THE CONTRACTOR SHALL NOTIFY THE 95 EXPRESS ENGINEER IF DEMOLITION OR NEW CONSTRUCTION WILL IMPACT SERVICE TO POWERED COMPONENTS NOT DESIGNATED TO LOSE ELECTRICAL POWER.

31. THE CONTRACTOR SHALL PRESERVE OR TEMPORARILY REPLACE ALL EXISTING LIGHTING ASSETS ALONG THE I-95 CORRIDOR THROUGHOUT THE CONSTRUCTION PERIOD IN ORDER TO AVOID A DIMINUTION OF THE EXISTING LIGHTING CONDITIONS FOR A PERIOD OF MORE THAN THIRTY (30) DAYS UNLESS OTHERWISE APPROVED BY THE VDOT. IF THE NECESSARY REPAIR OR REPLACEMENT OF AN EXISTING LIGHTING ASSET CANNOT BE COMPLETED WITHIN THE 30 DAY PERIOD, THE CONCESSIONAIRE SHALL PROVIDE, PRIOR TO THE EXPIRATION OF THE 30 DAY PERIOD, TEMPORARY LIGHTING EQUIPMENT UNTIL THE COMPLETION OF THE REPAIR OR REPLACEMENT WORK.

AFC PLANS

	PROJECT	SHEET NO.
	0095-076-299	I7(2)

LIMITED ACCESS HIGHWAY By Resolution of the Highway Commission dated October 4, 1956.
By Resolution of the Highway Commission dated January 18, 1973.
By Resolution of the Commonwealth Transportation Board dated April 19, 2022

PROJECT MANAGER Rimpal Shah, P.E. (703) 259-2362 (NOVA District) _____
SURVEYED BY, DATE H&B Surveying and Mapping, LLC (804) 330-3781, 03/09/2021
DESIGN BY Whitman, Requardt, & Associates, LLP (804) 212-8700 _____.
SUBSURFACE UTILITY BY, DATE Accumark, Inc. (804) 550-7740, 07/07/2021

COMMONWEALTH OF VIRGINIA
JEFFREY D. CHENG
Lic. No. 051900
PROFESSIONAL ENGINEER

Jeffrey D Cheng
2022.07.20 17:42:58 -04'00'

Whitman, Requardt & Associates
Baltimore, Maryland
TRAFFIC ENGINEER

REVISED	STATE	STATE ROUTE	STATE PROJECT	SHEET NO.
	VA.	95	0095-076-299,C-501	I7(2A)

DESIGN FEATURES RELATING TO CONSTRUCTION OR TO REGULATION AND CONTROL OF TRAFFIC MAY BE SUBJECT TO CHANGE AS DEEMED NECESSARY BY THE DEPARTMENT

LUMINAIRE DETAILS

ISO-ILLUMINATION TEMPLATES

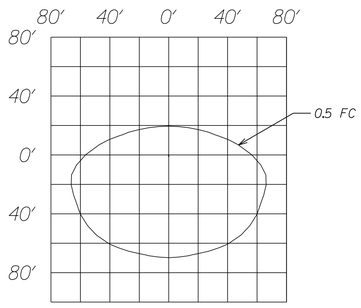

PHILIPS RFL LUMINAIRE PRODUCT NO: RFL-160W96LED4K-G2-4
DISTRIBUTION: TYPE 4
LAMP: 160W LED
MOUNTING HEIGHT: 40'

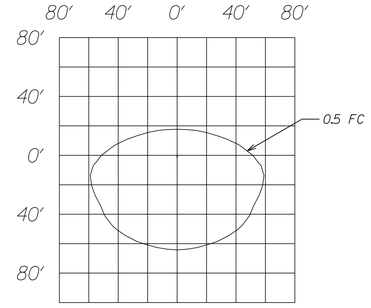

PHILIPS RFL LUMINAIRE PRODUCT NO: RFL-145W64LED4K-G2-4
DISTRIBUTION: TYPE 4
LAMP: 145W LED
MOUNTING HEIGHT: 40'

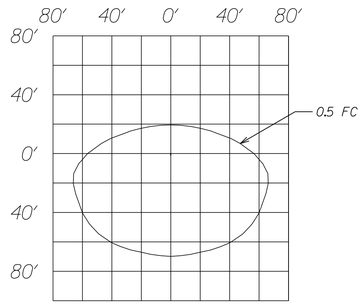

PHILIPS RFL LUMINAIRE PRODUCT NO: RFL-90W80LED4K-G2-R2M
DISTRIBUTION: TYPE 2M
LAMP: 90W LED
MOUNTING HEIGHT: 40'

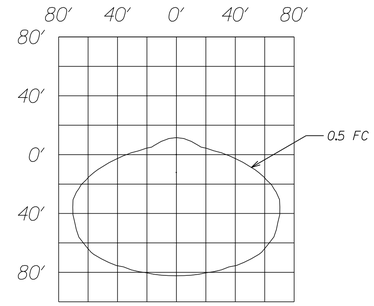

PHILIPS RFL LUMINAIRE PRODUCT NO: RFL-160W96LED4K-G2-4
DISTRIBUTION: TYPE 4
LAMP: 160W LED
MOUNTING HEIGHT: 30'

AFC PLANS

	PROJECT	SHEET NO.
	0095-076-299	I7(2A)

LIMITED ACCESS HIGHWAY

By Resolution of the Highway Commission dated October 4, 1956.
By Resolution of the Highway Commission dated January 18, 1973.
By Resolution of the Commonwealth Transportation Board dated April 19, 2022

PROJECT MANAGER Rimpal Shah, P.E. (703) 259-2362 (NOVA District) _____
SURVEYED BY, DATE H&B Surveying and Mapping, LLC (804) 330-3781, 03/09/2021
DESIGN BY Whitman, Requardt, & Associates, LLP (804) 212-8700 _____.
SUBSURFACE UTILITY BY, DATE Accutark, Inc. (804) 550-7740, 07/07/2021

COMMONWEALTH OF VIRGINIA
JEFFREY D. CHENG
Lic. No. 051900
PROFESSIONAL ENGINEER

Jeffrey D Cheng
2022.07.20 17:05:06 -04'00'

Whitman, Requardt & Associates
Baltimore, Maryland
TRAFFIC ENGINEER

REVISED	STATE	STATE ROUTE	STATE PROJECT	SHEET NO.
	VA.	95	0095-076-299,C-501	I7(2BII)

DESIGN FEATURES RELATING TO CONSTRUCTION OR TO REGULATION AND CONTROL OF TRAFFIC MAY BE SUBJECT TO CHANGE AS DEEMED NECESSARY BY THE DEPARTMENT

PHOTOMETRIC CALCULATIONS
RAMP DBSR

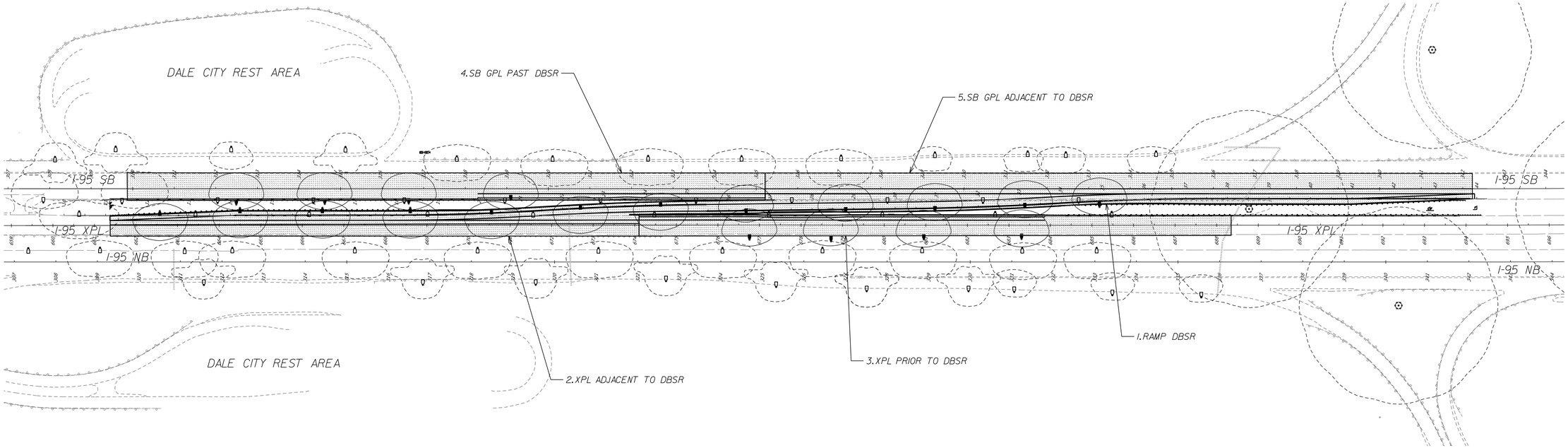

FREEWAY DESIGN CRITERIA							
ROAD	PAVEMENT CLASS	CALC. TYPE	UNITS	AVG	AVG/MIN	LV RATIO	MAX/MIN
FREEWAY CLASS A	R2 & R3	ILLUMINANCE	FC	0.9	3	N/A	N/A
FREEWAY CLASS A	R2 & R3	LUMINANCE	CD/SQ. M	0.6	3.5	0.3	6.0:1

PHOTOMETRIC CALCULATION RESULTS								
LABEL	DESIGN CRITERIA	CALC. TYPE	UNITS	AVG	MIN	AVG/MIN	LV RATIO	MAX/MIN
1. RAMP DBSR	FREEWAY CLASS A	ILLUMINANCE	FC	1.2	0.4	3.0	N/A	N/A
2. XPL ADJACENT TO DBSR	FREEWAY CLASS A	LUMINANCE	CD/SQ. M	0.6	0.3	2.0	0.3	3.3
3. XPL PRIOR TO DBSR	FREEWAY CLASS A	LUMINANCE	CD/SQ. M	0.8	0.3	2.7	0.3	6
4. SB GPL PAST DBSR	FREEWAY CLASS A	LUMINANCE	CD/SQ. M	0.7	0.3	2.3	-	6
5. SB GPL ADJACENT TO DBSR	FREEWAY CLASS A	LUMINANCE	CD/SQ. M	0.8	0.4	2.0	-	4.5

AFC PLANS

PHOTOMETRIC LEGEND

EXISTING	PROPOSED	DESCRIPTION
		ISO-ILLUMINANCE TEMPLATE AT 0.5 FOOT-CANDLES (SHAPE MAY VARY)

PROJECT	SHEET NO.
0095-076-299	I7(2BII)

7/20/2022 4589300101I7(02B2).dgn
2:39:10 PM Plotted By: sswearman

LIMITED ACCESS HIGHWAY

By Resolution of the Highway Commission dated October 4, 1956.
By Resolution of the Highway Commission dated January 18, 1973.
By Resolution of the Commonwealth Transportation Board dated April 19, 2022

PROJECT MANAGER: Rimpal Shah, P.E. (703) 259-2362 (NOVA District)
SURVEYED BY, DATE: H&B Surveying and Mapping, LLC (804) 330-3781, 03/09/2021
DESIGN BY: Whitman, Requardt, & Associates, LLP (804) 212-8700
SUBSURFACE UTILITY BY, DATE: Accutrak, Inc. (804) 550-7740, 07/07/2021

COMMONWEALTH OF VIRGINIA
JEFFREY D. CHENG
Lic. No. 051900
PROFESSIONAL ENGINEER

Jeffrey D Cheng
2022.07.20 17:06:10 -04'00'

Whitman, Requardt & Associates
Baltimore, Maryland
TRAFFIC ENGINEER

REVISED	STATE	STATE ROUTE	STATE PROJECT	SHEET NO.
	VA.	95	0095-076-299,C-501	I7(2B2)

DESIGN FEATURES RELATING TO CONSTRUCTION OR TO REGULATION AND CONTROL OF TRAFFIC MAY BE SUBJECT TO CHANGE AS DEEMED NECESSARY BY THE DEPARTMENT

PHOTOMETRIC CALCULATIONS
EXPRESS AND GENERAL PURPOSE LANES

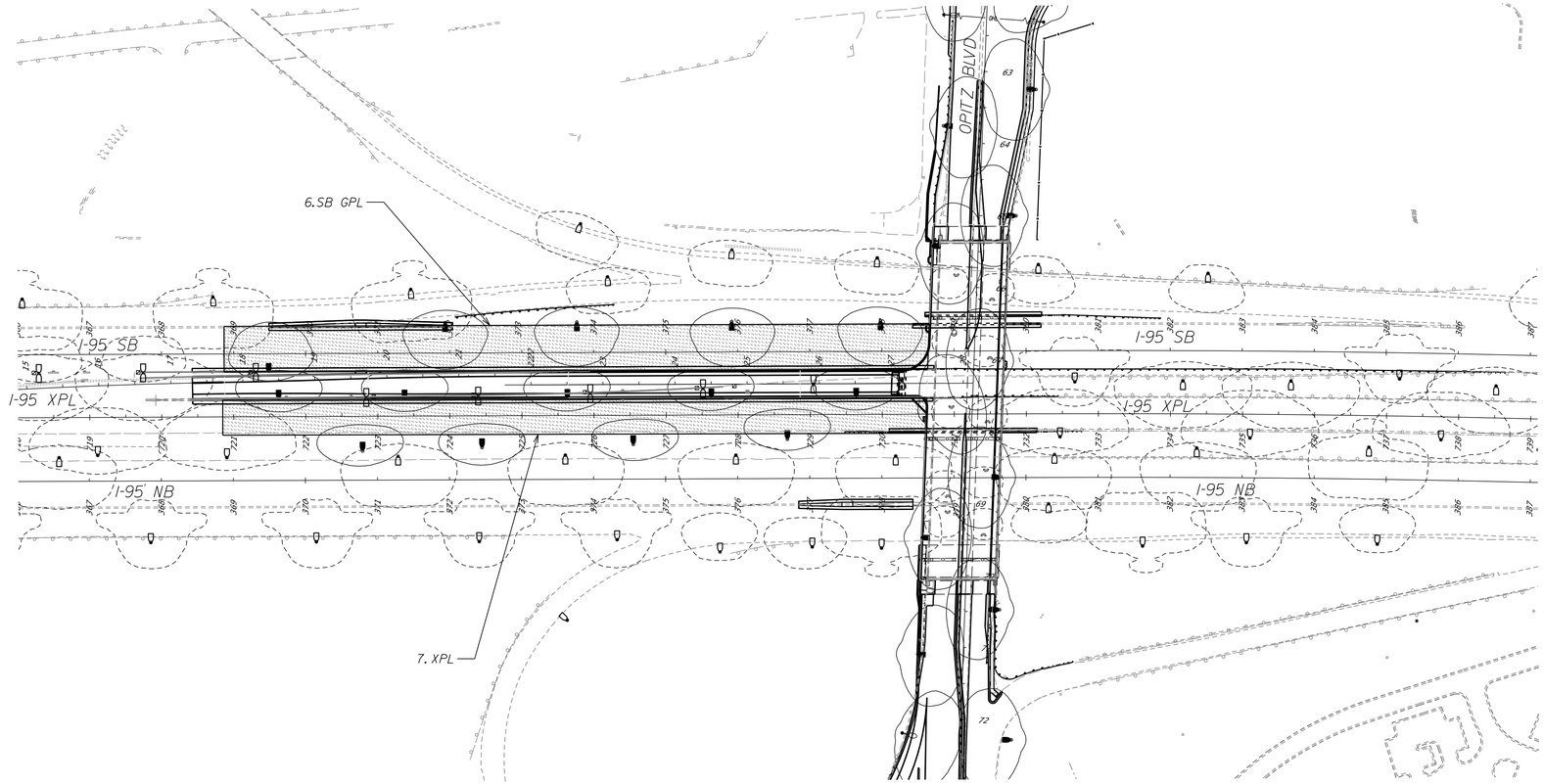

FREEWAY DESIGN CRITERIA							
ROAD	PAVEMENT CLASS	CALC. TYPE	UNITS	AVG	AVG/MIN	LV RATIO	MAX/MIN
FREEWAY CLASS A	R2 & R3	ILLUMINANCE	FC	0.9	3	N/A	N/A
FREEWAY CLASS A	R2 & R3	LUMINANCE	CD/SQ. M	0.6	3.5	0.3	6.0:1

PHOTOMETRIC CALCULATION RESULTS								
LABEL	DESIGN CRITERIA	CALC. TYPE	UNITS	AVG	MIN	AVG/MIN	LV RATIO	MAX/MIN
6. SB GPL	FREEWAY CLASS A	LUMINANCE	CD/SQ. M	0.7	0.3	2.3	0.2	6
7. XPL	FREEWAY CLASS A	LUMINANCE	CD/SQ. M	0.7	0.3	2.3	0.2	5

AFC PLANS

PHOTOMETRIC LEGEND

EXISTING	PROPOSED	DESCRIPTION
		ISO-ILLUMINANCE TEMPLATE AT 0.5 FOOT-CANDLES (SHAPE MAY VARY)

PROJECT	SHEET NO.
0095-076-299	I7(2B2)

Cell Revised 12/11/12

7/20/2022 4589300101I7(02B3).dgn
2:39:43 PM Plotted By: sswearman

LIMITED ACCESS HIGHWAY By Resolution of the Highway Commission dated October 4, 1956.
By Resolution of the Highway Commission dated January 18, 1973.
By Resolution of the Commonwealth Transportation Board dated April 19, 2022

PROJECT MANAGER Rimpal Shah, P.E. (703) 259-2362 (NOVA District)
SURVEYED BY, DATE H&B Surveying and Mapping, LLC (804) 330-3781, 03/09/2021
DESIGN BY Whitman, Requardt, & Associates, LLP (804) 212-8700
SUBSURFACE UTILITY BY, DATE Accutrak, Inc. (804) 550-7740, 07/07/2021

COMMONWEALTH OF VIRGINIA
JEFFREY D. CHENG
Lic. No. 051900
PROFESSIONAL ENGINEER

Jeffrey D Cheng
2022.07.20 17:06:48 -04'00'

Whitman, Requardt & Associates
Baltimore, Maryland
TRAFFIC ENGINEER

REVISED	STATE	STATE ROUTE	STATE PROJECT	SHEET NO.
	VA.	95	0095-076-299,C-501	I7(2B3)

DESIGN FEATURES RELATING TO CONSTRUCTION OR TO REGULATION AND CONTROL OF TRAFFIC MAY BE SUBJECT TO CHANGE AS DEEMED NECESSARY BY THE DEPARTMENT

PHOTOMETRIC CALCULATIONS
OPITZ BLVD AND RAMP OBTR

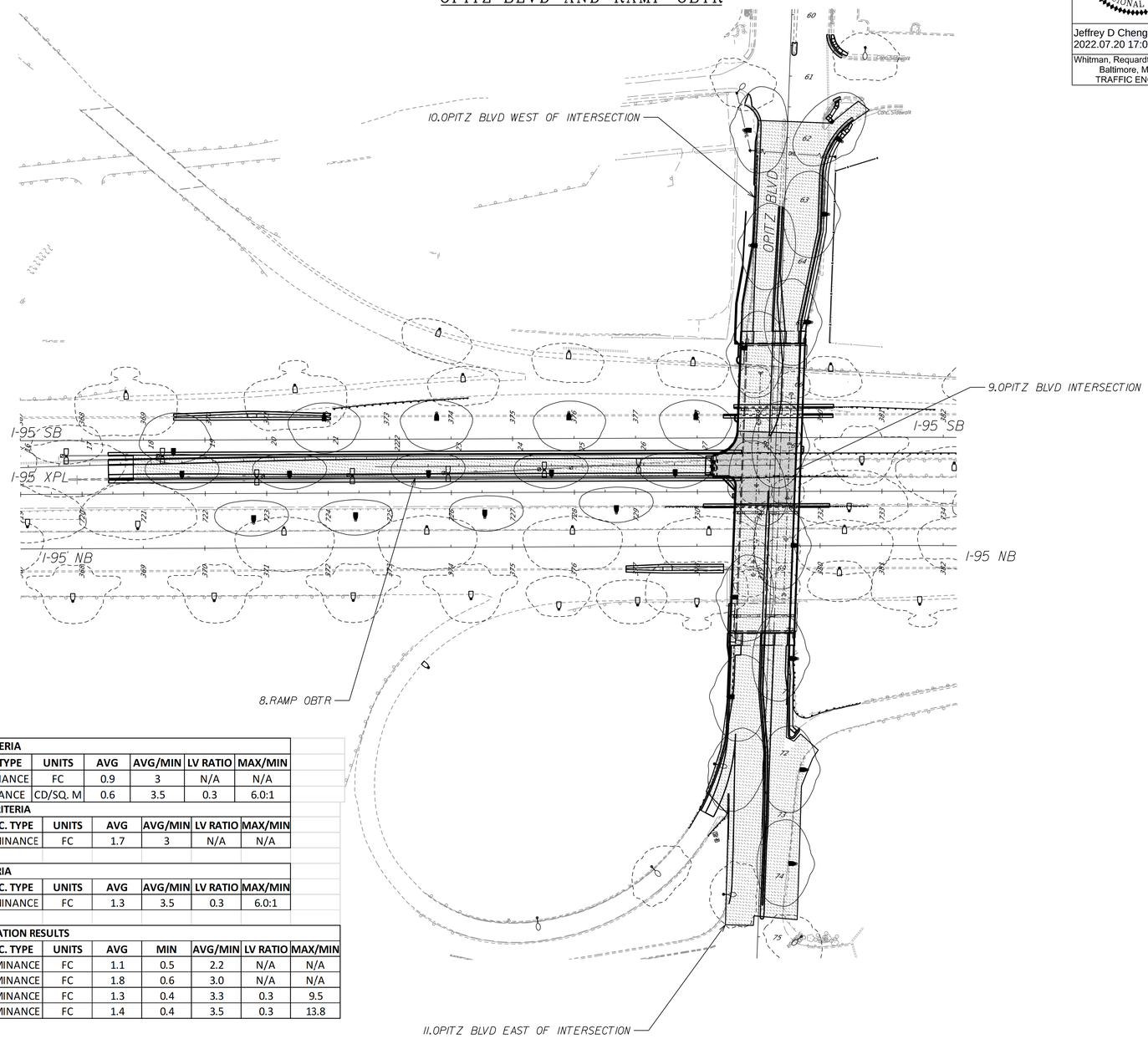

FREEWAY DESIGN CRITERIA							
ROAD	PAVEMENT CLASS	CALC. TYPE	UNITS	AVG	AVG/MIN	LV RATIO	MAX/MIN
FREEWAY CLASS A	R2 & R3	ILLUMINANCE	FC	0.9	3	N/A	N/A
FREEWAY CLASS A	R2 & R3	LUMINANCE	CD/SQ. M	0.6	3.5	0.3	6.0:1
INTERSECTION DESIGN CRITERIA							
INTERSECTION	PEDESTRIAN ACTIVITY	CALC. TYPE	UNITS	AVG	AVG/MIN	LV RATIO	MAX/MIN
MAJOR/MAJOR	LOW	ILLUMINANCE	FC	1.7	3	N/A	N/A

STREET DESIGN CRITERIA							
STREET	PEDESTRIAN ACTIIVTY	CALC. TYPE	UNITS	AVG	AVG/MIN	LV RATIO	MAX/MIN
MAJOR	LOW	ILLUMINANCE	FC	1.3	3.5	0.3	6.0:1

PHOTOMETRIC CALCULATION RESULTS								
LABEL	DESIGN CRITERIA	CALC. TYPE	UNITS	AVG	MIN	AVG/MIN	LV RATIO	MAX/MIN
8. RAMP OBTR	FREEWAY CLASS A	ILLUMINANCE	FC	1.1	0.5	2.2	N/A	N/A
9. OPITZ BLVD INTERSECTION	INTERSECTION - MAJOR/MAJOR	ILLUMINANCE	FC	1.8	0.6	3.0	N/A	N/A
10. OPITZ BLVD WEST OF INTERSECTION	STREET - MAJOR	ILLUMINANCE	FC	1.3	0.4	3.3	0.3	9.5
11. OPITZ BLVD EAST OF INTERSECTION	STREET - MAJOR	ILLUMINANCE	FC	1.4	0.4	3.5	0.3	13.8

AFC PLANS

PHOTOMETRIC LEGEND

EXISTING	PROPOSED	DESCRIPTION
		ISO-ILLUMINANCE TEMPLATE AT 0.5 FOOT-CANDLES (SHAPE MAY VARY)

PROJECT	SHEET NO.
0095-076-299	I7(2B3)

Cell Revised 12/11/12

7/20/2022 4589300101I7(02C1).dgn
2:39:50 PM Plotted By: sswearman

LIMITED ACCESS HIGHWAY By Resolution of the Highway Commission dated October 4, 1956.
By Resolution of the Highway Commission dated January 18, 1973.
By Resolution of the Commonwealth Transportation Board dated April 19, 2022

PROJECT MANAGER Rimpal Shah, P.E. (703) 259-2362 (NOVA District) _____
SURVEYED BY, DATE B&B Surveying and Mapping, LLC (804) 330-3781, 03/09/2021
DESIGN BY Whitman, Requardt, & Associates, LLP (804) 212-8700 _____
SUBSURFACE UTILITY BY, DATE Accutrak, Inc. (804) 550-7740, 07/07/2021

COMMONWEALTH OF VIRGINIA
JEFFREY D. CHENG
Lic. No. 051900
PROFESSIONAL ENGINEER

Jeffrey D Cheng
2022.07.20 17:07:08 -04'00'
Whitman, Requardt & Associates
Baltimore, Maryland
TRAFFIC ENGINEER

REVISED	STATE	STATE ROUTE	STATE PROJECT	SHEET NO.
	VA.	95	0095-076-299,C-501	I7(2C1)

DESIGN FEATURES RELATING TO CONSTRUCTION OR TO REGULATION AND CONTROL OF TRAFFIC MAY BE SUBJECT TO CHANGE AS DEEMED NECESSARY BY THE DEPARTMENT

ONE LINE DIAGRAM
VDOT SERVICE PANEL SP-22

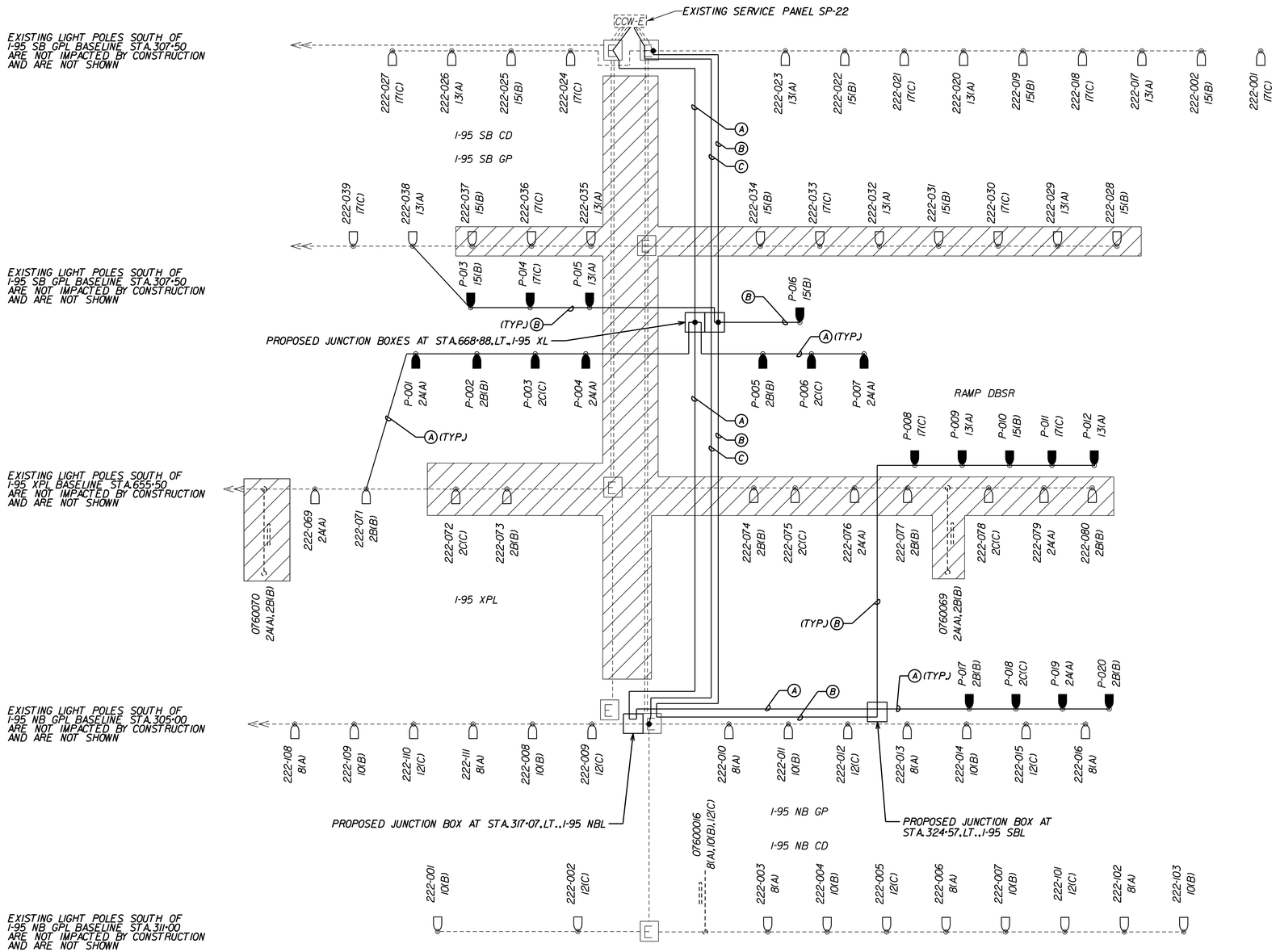

LEGEND

- PROPOSED CIRCUIT(S)
- PROPOSED CIRCUIT(S) SPLICE POINT
- EXISTING CIRCUIT(S)
- P-XXX / XX(A,B,OR,C) — POLE NUMBER / CIRCUIT (PHASE)
- EXISTING LIGHTING EQUIPMENT/ INFRASTRUCTURE TO BE REMOVED

(A) CIRCUITS 2A, 2B, 2C, 4#1, 1#1 EGC

(B) CIRCUITS 13, 15, 17 4#2, 1#2 EGC

(C) CIRCUITS 8, 10, 12 4#2, 1#2 EGC

AFC PLANS

NOTES:

1. THE SINGLE LINE DIAGRAM DOES NOT REFLECT ALL EXISTING LIGHT POLES, SIGN LIGHTING, OR CIRCUITS ON THE ENTIRE LIGHTING SYSTEM. EXISTING LIGHT POLES, SIGN LIGHTING, AND CIRCUITS WHICH ARE PERTINENT TO THIS PROJECT'S WORK ONLY ARE SHOWN. OTHER EXISTING LIGHT POLES, SIGN LIGHTING, AND CIRCUITS MAY BE PRESENT AND CONNECTED TO THE OVERALL LIGHTING SYSTEM.
2. POLE NUMBERS AND CIRCUITRY SHOWN ON PLAN ARE BASED ON AVAILABLE AS-BUILT PLAN INFORMATION AND FIELD INVENTORY.

	PROJECT	SHEET NO.
	0095-076-299	I7(2C1)

Cell Revised 12/11/12

LIMITED ACCESS HIGHWAY By Resolution of the Highway Commission dated October 4, 1956.
By Resolution of the Highway Commission dated January 18, 1973.
By Resolution of the Commonwealth Transportation Board dated April 19, 2022

PROJECT MANAGER: Rimpal Shah, P.E. (703) 259-2362 (NOVA District)
SURVEYED BY, DATE: H&B Surveying and Mapping, LLC (804) 330-3781, 03/09/2021
DESIGN BY: Whitman, Requardt, & Associates, LLP (804) 212-8700
SUBSURFACE UTILITY BY, DATE: Accutrark, Inc. (804) 550-7740, 07/07/2021

COMMONWEALTH OF VIRGINIA
JEFFREY D. CHENG
Lic. No. 051900
PROFESSIONAL ENGINEER

Jeffrey D Cheng
2022.07.20 17:07:27 -04'00'

Whitman, Requardt & Associates
Baltimore, Maryland
TRAFFIC ENGINEER

REVISED	STATE	STATE ROUTE	STATE PROJECT	SHEET NO.
	VA.	95	0095-076-299,C-501	I7(2C2)

DESIGN FEATURES RELATING TO CONSTRUCTION OR TO REGULATION AND CONTROL OF TRAFFIC MAY BE SUBJECT TO CHANGE AS DEEMED NECESSARY BY THE DEPARTMENT

ONE LINE DIAGRAM
VDOT SERVICE PANEL SP-21

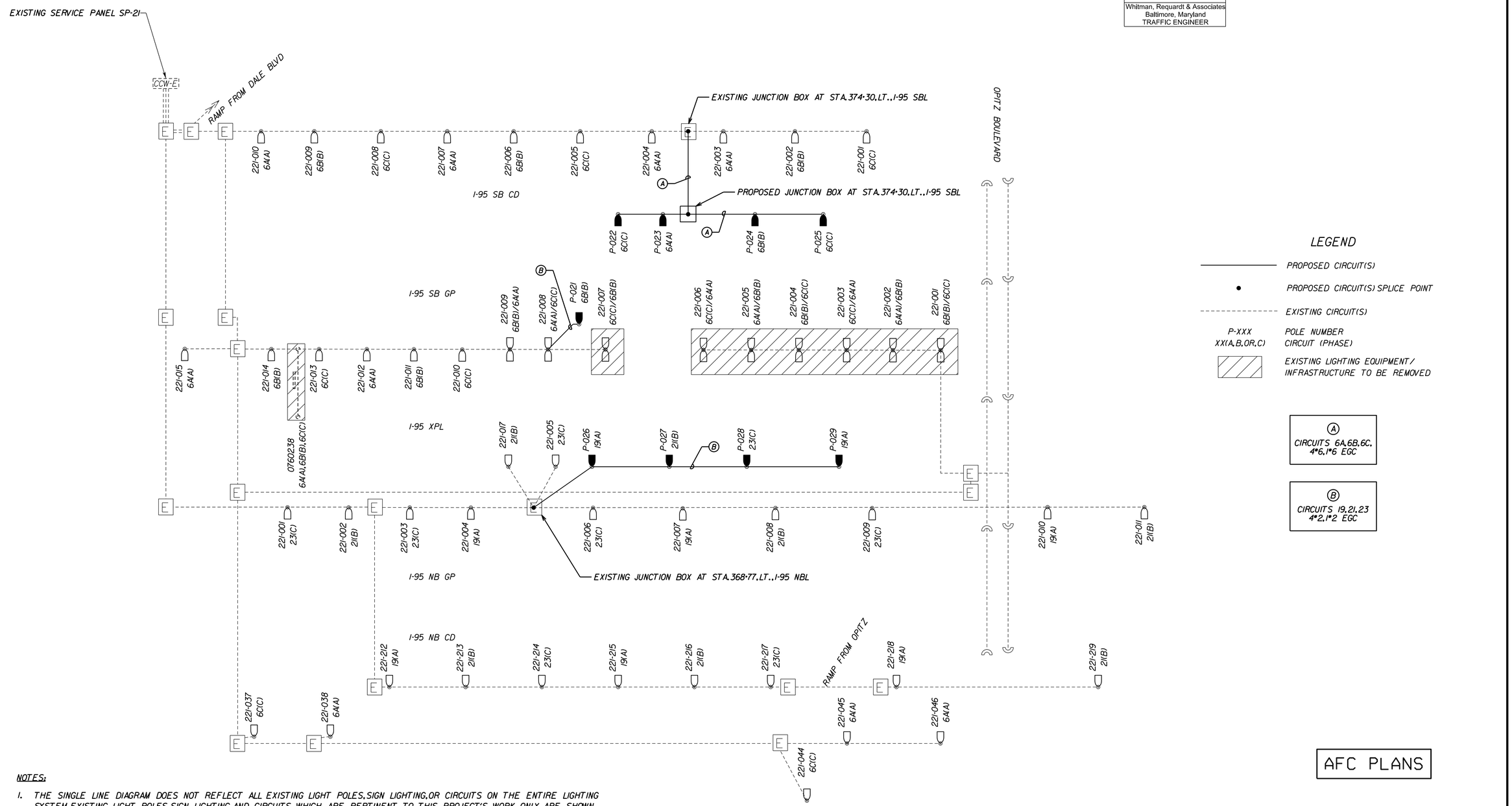

LEGEND

- PROPOSED CIRCUIT(S)
- PROPOSED CIRCUIT(S) SPLICE POINT
- EXISTING CIRCUIT(S)
- P-XXX — POLE NUMBER
- XX(A,B,OR,C) — CIRCUIT (PHASE)
- EXISTING LIGHTING EQUIPMENT / INFRASTRUCTURE TO BE REMOVED

(A) CIRCUITS 6A,6B,6C, 4*6,1*6 EGC

(B) CIRCUITS 19,21,23 4*2,1*2 EGC

AFC PLANS

NOTES:

1. THE SINGLE LINE DIAGRAM DOES NOT REFLECT ALL EXISTING LIGHT POLES, SIGN LIGHTING, OR CIRCUITS ON THE ENTIRE LIGHTING SYSTEM. EXISTING LIGHT POLES, SIGN LIGHTING, AND CIRCUITS WHICH ARE PERTINENT TO THIS PROJECT'S WORK ONLY ARE SHOWN. OTHER EXISTING LIGHT POLES, SIGN LIGHTING, AND CIRCUITS MAY BE PRESENT AND CONNECTED TO THE OVERALL LIGHTING SYSTEM.
2. POLE NUMBERS AND CIRCUITRY SHOWN ON PLAN ARE BASED ON AVAILABLE AS-BUILT PLAN INFORMATION AND FIELD INVENTORY.

PROJECT	SHEET NO.
0095-076-299	I7(2C2)

LIMITED ACCESS HIGHWAY

By Resolution of the Highway Commission dated October 4, 1956.
By Resolution of the Highway Commission dated January 18, 1973.
By Resolution of the Commonwealth Transportation Board dated April 19, 2022

PROJECT MANAGER: Rimpal Shah, P.E. (703) 259-2362 (NOVA District)
SURVEYED BY, DATE: H&B Surveying and Mapping, LLC (804) 330-3781, 03/09/2021
DESIGN BY: Whitman, Requardt & Associates, LLP (804) 212-8700
SUBSURFACE UTILITY BY, DATE: Accumark, Inc. (804) 550-7740, 07/07/2021

COMMONWEALTH OF VIRGINIA
JEFFREY D. CHENG
Lic. No. 051900
PROFESSIONAL ENGINEER

Jeffrey D Cheng
2022.07.20 17:07:45 -04'00'

Whitman, Requardt & Associates
Baltimore, Maryland
TRAFFIC ENGINEER

REVISED	STATE	STATE ROUTE	STATE PROJECT	SHEET NO.
	VA.	95	0095-076-299,C-501	I7(2C3)

DESIGN FEATURES RELATING TO CONSTRUCTION OR TO REGULATION AND CONTROL OF TRAFFIC MAY BE SUBJECT TO CHANGE AS DEEMED NECESSARY BY THE DEPARTMENT

SINGLE LINE DIAGRAM
XPL SERVICE PANEL H117A

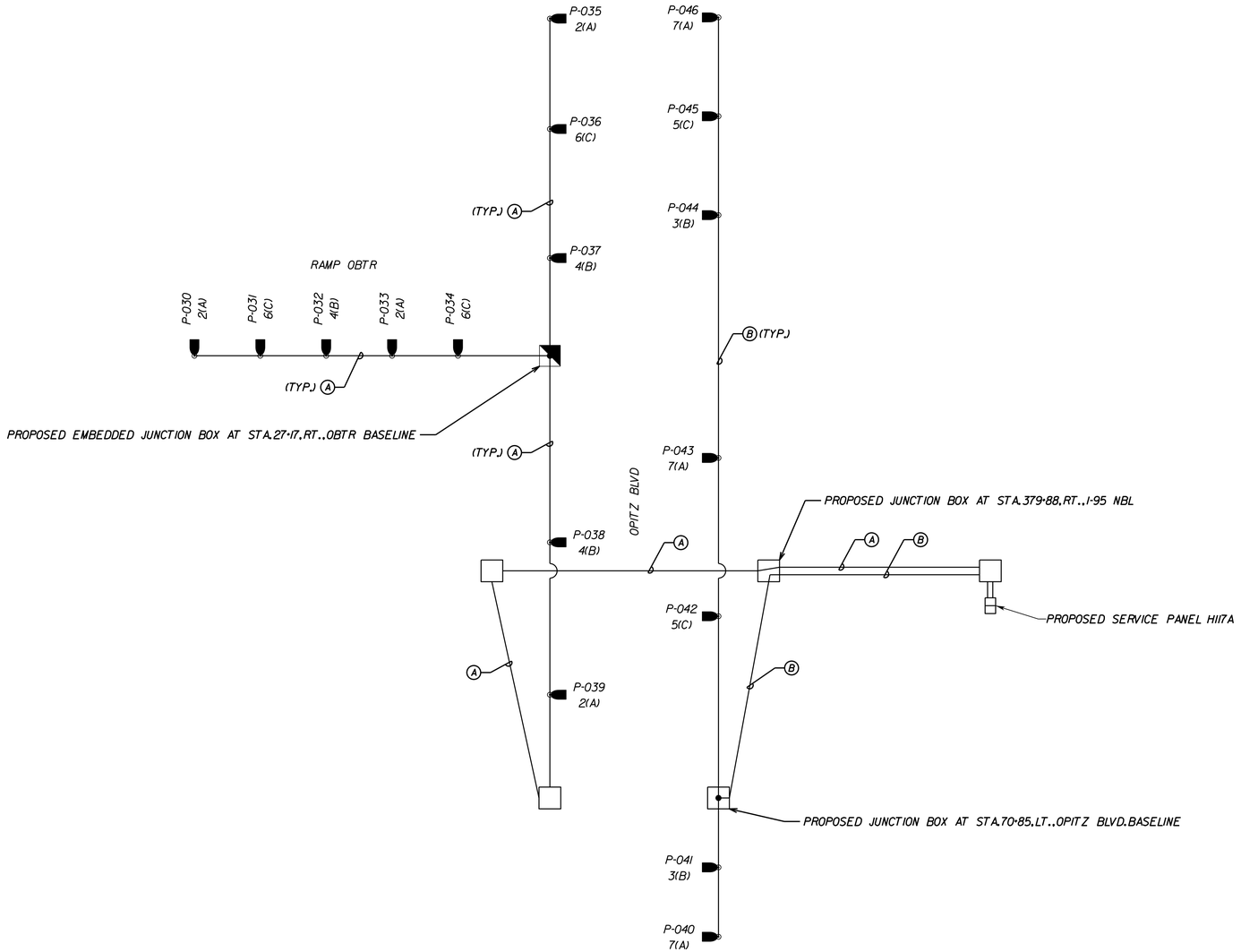

LEGEND

- PROPOSED CIRCUIT(S)
- PROPOSED CIRCUIT(S) SPLICE POINT
- EXISTING CIRCUIT(S)
- P-XXX — POLE NUMBER
- XX(A,B,OR,C) — CIRCUIT (PHASE)
- EXISTING LIGHTING EQUIPMENT / INFRASTRUCTURE TO BE REMOVED

(A) CIRCUITS 2,4,6
4*6,1*6 EGC

(B) CIRCUITS 3,5,7
4*6,1*6 EGC

AFC PLANS

PROJECT	SHEET NO.
0095-076-299	I7(2C3)

Cell Revised 12/11/12

LIMITED ACCESS HIGHWAY

By Resolution of the Highway Commission dated October 4, 1956.
By Resolution of the Highway Commission dated January 18, 1973.
By Resolution of the Commonwealth Transportation Board dated April 19, 2022

PROJECT MANAGER: Rimpal Shah, P.E. (703) 259-2362 (NOVA District)
SURVEYED BY, DATE: H&B Surveying and Mapping, LLC (804) 330-3781, 03/09/2021
DESIGN BY: Whitman, Requardt, & Associates, LLP (804) 212-8700
SUBSURFACE UTILITY BY, DATE: Accumark, Inc. (804) 550-7740, 07/07/2021

COMMONWEALTH OF VIRGINIA
JEFFREY D. CHENG
Lic. No. 051900
PROFESSIONAL ENGINEER

Jeffrey D Cheng
2022.07.20 17:08:10 -04'00'

Whitman, Requardt & Associates
Baltimore, Maryland
TRAFFIC ENGINEER

REVISED	STATE	STATE ROUTE	STATE PROJECT	SHEET NO.
	VA.	95	0095-076-299,C-501	I7(2C4)

DESIGN FEATURES RELATING TO CONSTRUCTION OR TO REGULATION AND CONTROL OF TRAFFIC MAY BE SUBJECT TO CHANGE AS DEEMED NECESSARY BY THE DEPARTMENT

PANELBOARD SCHEDULE
VDOT SERVICE PANEL SP-22

PANELBOARD SCHEDULE

EXISTING SERVICE PANEL SP-22 (SHEET I7(4))

LOAD DESCRIPTION	LOAD (AMPS) ØA	ØB	ØC	BRKR (AMPS)	CKT NO.	ØA ØB ØC	CKT NO.	BRKR (AMPS)	LOAD (AMPS) ØA	ØB	ØC	LOAD DESCRIPTION
EXISTING	-			20	1		2 (2A)	20	-0.43*			EXISTING I-95 XPL LIGHTING REMOVED: (2) 205W LED, (2) 150W HPS SIGN LUMINAIRES ADDED: (4) 160W LED
EXISTING		-		20	3		4 (2B)	20		-2.1*		EXISTING I-95 XPL LIGHTING REMOVED: (4) 205W LED, (2) 150W HPS SIGN LUMINAIRES ADDED: (4) 160W LED
EXISTING			-	20	5		6 (2C)	20			-0.54*	EXISTING I-95 XPL LIGHTING REMOVED: (3) 205W LED ADDED: (3) 160W LED
EXISTING	-			20	7		8	30	-			EXISTING
EXISTING		-		20	9		10	30		-		EXISTING
EXISTING			-	20	11		12	30			-	EXISTING
EXISTING I-95 SB GPL LIGHTING REMOVED: (3) 210W LED ADDED: (3) 160W LED	-0.60*			30	13		14	15	-			EXISTING
EXISTING I-95 SB GPL LIGHTING REMOVED: (4) 210W LED ADDED: (3) 160W LED		-1.44*		30	15		16	15		-		EXISTING
EXISTING I-95 SB GPL LIGHTING REMOVED: (3) 210W LED ADDED: (3) 160W LED			-0.60*	30	17		18	15			-	EXISTING

MAINS: 225A MAIN CIRCUIT BREAKER
VOLTAGE: 277/480Y VAC, 3 PHASE, 4 WIRE
MOUNTING: BASE MOUNTED CONTROL CABINET

* INDICATES THE CHANGE ON THE CIRCUIT DUE TO PROPOSED CONSTRUCTION AND NOT THE TOTAL AMPERAGE.

NOTES:

1. CIRCUIT LOAD, AMPERAGE, AND WIRE SIZE IS NOT PROVIDED FOR LIGHT POLES WHICH ARE NOT IMPACTED BY CONSTRUCTION.

AFC PLANS

PROJECT	SHEET NO.
0095-076-299	I7(2C4)

LIMITED ACCESS HIGHWAY

By Resolution of the Highway Commission dated October 4, 1956.
By Resolution of the Highway Commission dated January 18, 1973.
By Resolution of the Commonwealth Transportation Board dated April 19, 2022

PROJECT MANAGER: Rimpal Shah, P.E. (703) 259-2362 (NOVA District)
SURVEYED BY, DATE: H&B Surveying and Mapping, LLC (804) 330-3781, 03/09/2021
DESIGN BY: Whitman, Requardt, & Associates, LLP (804) 212-8700
SUBSURFACE UTILITY BY, DATE: Accutrak, Inc. (804) 550-7740, 07/07/2021

COMMONWEALTH OF VIRGINIA
JEFFREY D. CHENG
Lic. No. 051900
PROFESSIONAL ENGINEER

Jeffrey D Cheng
2022.07.20 17:08:32 -04'00'

Whitman, Requardt & Associates
Baltimore, Maryland
TRAFFIC ENGINEER

REVISED	STATE	STATE ROUTE	STATE PROJECT	SHEET NO.
	VA.	95	0095-076-299,C-501	I7(2C5)

DESIGN FEATURES RELATING TO CONSTRUCTION OR TO REGULATION AND CONTROL OF TRAFFIC MAY BE SUBJECT TO CHANGE AS DEEMED NECESSARY BY THE DEPARTMENT

PANELBOARD SCHEDULE
VDOT SERVICE PANEL SP-21

PANELBOARD SCHEDULE

EXISTING SERVICE PANEL SP-21 (SHEET I7(6))

LOAD DESCRIPTION	LOAD (AMPS) ØA	ØB	ØC	BRKR (AMPS)	CKT NO.	ØA ØB ØC	CKT NO.	BRKR (AMPS)	LOAD (AMPS) ØA	ØB	ØC	LOAD DESCRIPTION
EXISTING	-			40	1		2	40	-			EXISTING
EXISTING		-		40	3		4	40		-		EXISTING
EXISTING			-	40	5		6	40			-	EXISTING
EXISTING	-			40	7		8	40	-			EXISTING
EXISTING		-		40	9		10	40		-		EXISTING
EXISTING			-	40	11		12	40			-	EXISTING
EXISTING	-			40	13		14 (6A)	40	-2.78*			EXISTING REMOVED: (2) 205W LED, (2) 130W LED, (1) 150W HPS SIGN LUMINAIRE ADDED: (1) 145 LED
EXISTING		-		40	15		16 (6B)	40		-2.73*		EXISTING REMOVED: (2) 205W LED, (3) 130W LED, (1) 150W HPS SIGN LUMINAIRE ADDED: (2) 145W LED
EXISTING			-	40	17		18 (6C)	40			-3.03*	EXISTING REMOVED: (3) 205W LED, (2) 130W LED, (1) 150W HPS SIGN LUMINAIRE ADDED: (2) 145W LED
EXISTING ADDED: (2) 90W LED	5.78			30	19		20	-	-			SPACE
EXISTING ADDED: (1) 90W LED		6.24		30	21		22	-		-		SPACE
EXISTING ADDED: (1) 90W LED			6.24	30	23		24	-			-	SPACE

MAINS: 225A MAIN CIRCUIT BREAKER
VOLTAGE: 277/480Y VAC, 3 PHASE, 4 WIRE
MOUNTING: BASE MOUNTED CONTROL CABINET

* INDICATES THE CHANGE ON THE CIRCUIT DUE TO PROPOSED CONSTRUCTION AND NOT THE TOTAL AMPERAGE.

NOTES:

1. CIRCUIT LOAD, AMPERAGE, AND WIRE SIZE IS NOT PROVIDED FOR LIGHT POLES WHICH ARE NOT IMPACTED BY CONSTRUCTION.

AFC PLANS

	PROJECT	SHEET NO.
	0095-076-299	I7(2C5)

LIMITED ACCESS HIGHWAY

By Resolution of the Highway Commission dated October 4, 1956.
By Resolution of the Highway Commission dated January 18, 1973.
By Resolution of the Commonwealth Transportation Board dated April 19, 2022

PROJECT MANAGER: Rimpal Shah, P.E. (703) 259-2362 (NOVA District) _____
SURVEYED BY, DATE: H&B Surveying and Mapping, LLC (804) 330-3781, 03/09/2021
DESIGN BY: Whitman, Requardt, & Associates, LLP (804) 212-8700 _____.
SUBSURFACE UTILITY BY, DATE: Accumark, Inc. (804) 550-7740, 07/07/2021

COMMONWEALTH OF VIRGINIA
JEFFREY D. CHENG
Lic. No. 051900
PROFESSIONAL ENGINEER

Jeffrey D Cheng
2022.07.20 17:08:56 -04'00'

Whitman, Requardt & Associates
Baltimore, Maryland
TRAFFIC ENGINEER

REVISED	STATE	STATE ROUTE	STATE PROJECT	SHEET NO.
	VA.	95	0095-076-299,C-501	I7(2C6)

DESIGN FEATURES RELATING TO CONSTRUCTION OR TO REGULATION AND CONTROL OF TRAFFIC MAY BE SUBJECT TO CHANGE AS DEEMED NECESSARY BY THE DEPARTMENT

PANELBOARD SCHEDULE
XPL SERVICE PANEL H117A

PANELBOARD SCHEDULE

PROPOSED SERVICE PANEL H117A (CCW-1 TYPE "H" MODIFIED) (SHEET I7(8))

LOAD DESCRIPTION	LOAD (AMPS) ØA	ØB	ØC	BRKR (AMPS)	CKT NO.	ØA ØB ØC	CKT NO.	BRKR (AMPS)	LOAD (AMPS) ØA	ØB	ØC	LOAD DESCRIPTION
PHOTOCONTROL	0.7			10	1		2	20	2.01			(2) 160W LED,(2) 90W LED
(2) 160W LED		1.28		20	3		4	20		1.64		(2) 160W LED,(1) 90W LED
(2) 160W LED			1.28	20	5		6	20			1.36	(1) 160W LED,(2) 90W LED
(3) 160W LED	1.93			20	7		8	20				SPARE
SPARE				20	9		10	20				SPARE
SPARE				20	11		12	20				SPARE
SPARE				20	13		14	20				SPARE
SPARE				20	15		16	20				SPARE
SPARE				20	17		18	20				SPARE

BREAKER MINIMUM INTERRUPTING CAPACITY 22,000 AMPS SYMM.

MAINS: 200A MAIN CIRCUIT BREAKER
VOLTAGE: 277/480Y VAC, 3 PHASE, 4 WIRE
MOUNTING: BASE MOUNTED CONTROL CABINET

CONTACTORS: 60 AMP, 3 POLE

NOTE: NUMBER OF CONTACTORS SHALL BE AS REQUIRED TO HANDLE THE NUMBER OF CIRCUITS ACTUALLY BEING USED AND NUMBER OF SPARE CIRCUIT BREAKERS SHOWN

AFC PLANS

	PROJECT	SHEET NO.
	0095-076-299	I7(2C6)

LIMITED ACCESS HIGHWAY

By Resolution of the Highway Commission dated October 4, 1956.
By Resolution of the Highway Commission dated January 18, 1973.
By Resolution of the Commonwealth Transportation Board dated April 19, 2022

PROJECT MANAGER: Rimpal Shah, P.E. (703) 259-2362 (NOVA District)
SURVEYED BY, DATE: H&B Surveying and Mapping, LLC (804) 330-3781, 03/09/2021
DESIGN BY: Whitman, Requardt, & Associates, LLP (804) 212-8700
SUBSURFACE UTILITY BY, DATE: Accutrark, Inc. (804) 550-7740, 07/07/2021

COMMONWEALTH OF VIRGINIA
JEFFREY D. CHENG
Lic. No. 051900
PROFESSIONAL ENGINEER

Jeffrey D Cheng
2022.07.20 17:09:20 -04'00'

Whitman, Requardt & Associates
Baltimore, Maryland
TRAFFIC ENGINEER

REVISED	STATE	STATE ROUTE	STATE PROJECT	SHEET NO.
	VA.	95	0095-076-299,C-501	I7(2DI)

DESIGN FEATURES RELATING TO CONSTRUCTION OR TO REGULATION AND CONTROL OF TRAFFIC MAY BE SUBJECT TO CHANGE AS DEEMED NECESSARY BY THE DEPARTMENT

FOUNDATION IN BARRIER DETAIL

GENERAL NOTES:

1. CONDUITS, FOUNDATIONS, AND JUNCTION CHAMBERS SHALL BE COORDINATED BY THE CONTRACTOR PRIOR TO THE CONSTRUCTION OF ALL RELATED ELEMENTS.
2. MATCH NEW BARRIER FACE WHEN INSTALLED IN NEW RUN OF BARRIER.
3. SEE LIGHTING PLANS FOR QUANTITY AND SIZE OF CONDUITS PRESENT AT EACH LIGHT POLE LOCATION.
4. SEE STANDARD DETAIL BCS-29A FOR DETAILS OF 8"x8"x16" JUNCTION CHAMBER. THE CONTRACTOR SHALL USE HEX HEAD BOLTS IN LIEU OF FLAT HEAD SCREWS FOR FASTENING COVER PLATE TO CHAMBER.
5. DETAILS ON THIS DRAWING ARE FOR GENERAL INFORMATION ONLY. REINFORCEMENT SHOWN IS THE MINIMUM STEEL REQUIRED. THE CONTRACTOR IS RESPONSIBLE FOR THE DESIGN AND DETAILING OF THE FINAL FOUNDATION IN ACCORDANCE WITH SECTIONS 700 AND 502 OF THE SPECIFICATIONS, WHICH SHALL BE PERFORMED IN CONJUNCTION WITH THE LIGHT POLE WORKING DRAWING SUBMISSION. THE LIGHT POLE FOUNDATION IS COMPRISED OF THE ANCHOR BOLTS, THE BARRIER, AND THE CAISSON.
6. ANCHOR BOLTS, NUTS AND WASHERS USED TO ATTACH STRUCTURES TO FOUNDATIONS SHALL CONFORM TO SECTION 700 OF THE SPECIFICATIONS. THE EXPOSED PORTION PLUS A MINIMUM OF 12" OF THE ANCHOR BOLT AND ALL OF THE NUTS AND WASHERS SHALL BE HOT DIPPED GALVANIZED AS PER ASTM A153.

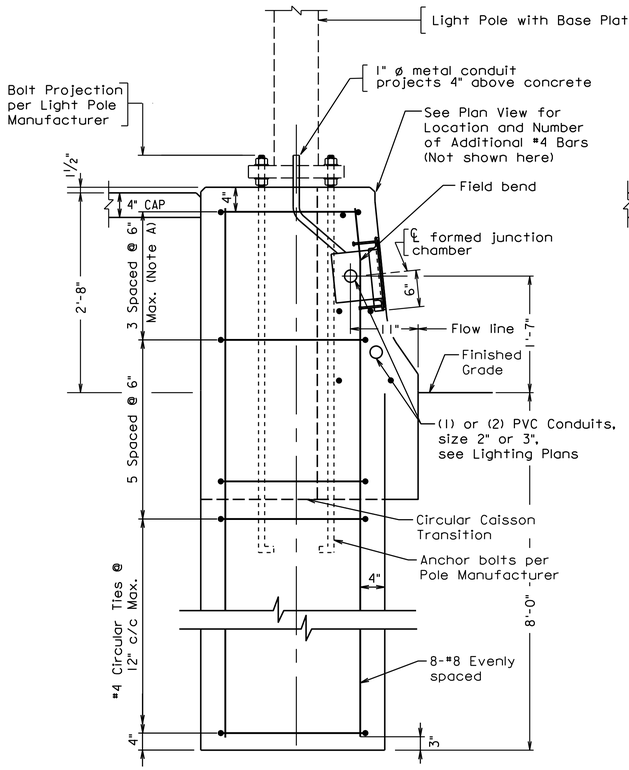

SECTION A-A

Note A:
Adjust ties as required to comply with face of Barrier.

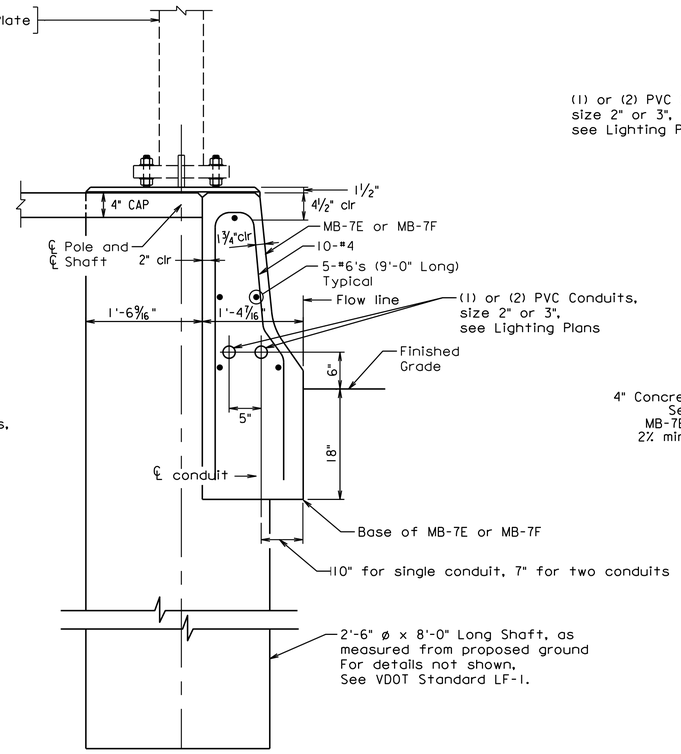

SECTION B-B

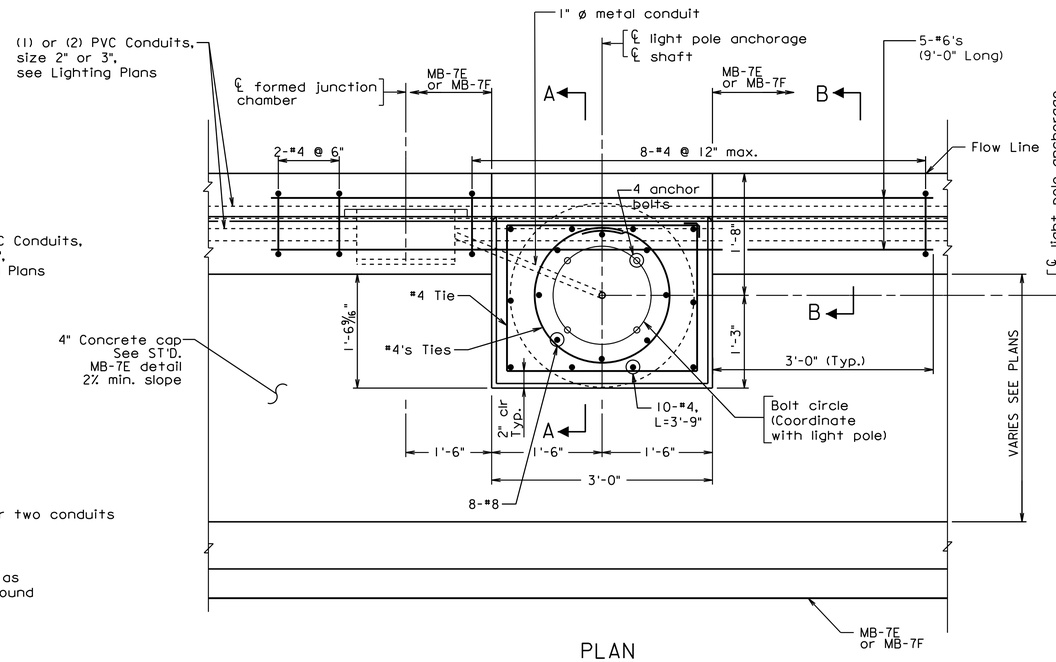

PLAN

Plan Notes:
1. All concrete to be Class A3.
2. All reinforcing to be per ASTM A615, Grade 60.
3. For Details of ties, See Standard LF-1.
4. Anchor bolts shall conform to the requirements of AASHTO M314 grade 55 with supplemental requirements S1. Nuts shall conform to the requirements of ASTM A563 and washers shall conform to the requirements of ASTM F436.

AFC PLANS

	PROJECT	SHEET NO.
	0095-076-299	I7(2DI)

7/20/2022 4589300101I7(02D2).dgn
2:40:04 PM Plotted By: sswearman

LIMITED ACCESS HIGHWAY

By Resolution of the Highway Commission dated October 4, 1956.
By Resolution of the Highway Commission dated January 18, 1973.
By Resolution of the Commonwealth Transportation Board dated April 19, 2022

PROJECT MANAGER: Rimpal Shah, P.E. (703) 259-2362 (NOVA District)
SURVEYED BY, DATE: H&B Surveying and Mapping, LLC (804) 330-3781, 03/09/2021
DESIGN BY: Whitman, Requardt & Associates, LLP (804) 212-8700
SUBSURFACE UTILITY BY, DATE: Accutrak, Inc. (804) 550-7740, 07/07/2021

COMMONWEALTH OF VIRGINIA
JEFFREY D. CHENG
Lic. No. 051900
PROFESSIONAL ENGINEER

Jeffrey D Cheng
2022.07.20 17:09:41 -04'00'

Whitman, Requardt & Associates
Baltimore, Maryland
TRAFFIC ENGINEER

REVISED	STATE	STATE ROUTE	STATE PROJECT	SHEET NO.
	VA.	95	0095-076-299,C-501	I7(2D2)

DESIGN FEATURES RELATING TO CONSTRUCTION OR TO REGULATION AND CONTROL OF TRAFFIC MAY BE SUBJECT TO CHANGE AS DEEMED NECESSARY BY THE DEPARTMENT

CONDUIT & JUNCTION CHAMBER IN BARRIER DETAIL

GENERAL NOTES:

1. CONDUITS AND JUNCTION CHAMBERS SHALL BE COORDINATED BY THE CONTRACTOR PRIOR TO THE CONSTRUCTION OF ALL RELATED ELEMENTS.
2. SEE LIGHTING PLANS AND ITS PLANS FOR QUANTITY AND SIZE OF CONDUITS REQUIRED.
3. SEE STANDARD DETAIL BCS-29A FOR DETAILS OF 8"x8"x16" JUNCTION CHAMBER. THE CONTRACTOR SHALL USE HEX HEAD BOLTS IN LIEU OF FLAT HEAD SCREWS FOR FASTENING COVER PLATE TO CHAMBER.

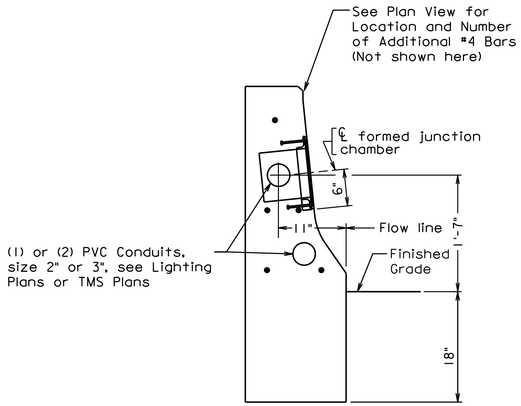

SECTION A-A

Note A:
Adjust ties as required to comply with face of Barrier.

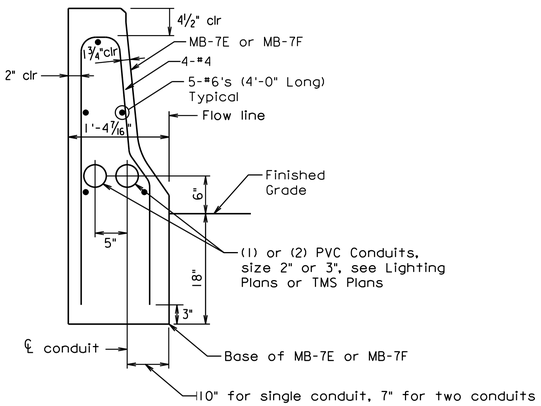

SECTION B-B

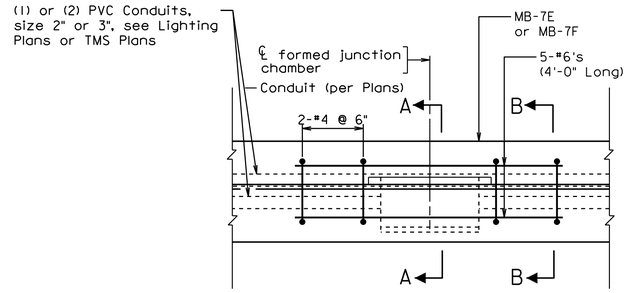

PLAN

Plan Notes:
1. All concrete to be Class A3.
2. All reinforcing to be per ASTM A615, Grade 60.

AFC PLANS

	PROJECT	SHEET NO.
	0095-076-299	I7(2D2)

Cell Revised 12/11/12

LIMITED ACCESS HIGHWAY

By Resolution of the Highway Commission dated October 4, 1956.
By Resolution of the Highway Commission dated January 18, 1973.
By Resolution of the Commonwealth Transportation Board dated April 19, 2022

PROJECT MANAGER: Rimpal Shah, P.E. (703) 259-2362 (NOVA District)
SURVEYED BY, DATE: H&B Surveying and Mapping, LLC (804) 330-3781, 03/09/2021
DESIGN BY: Whitman, Requardt & Associates, LLP (804) 212-8700
SUBSURFACE UTILITY BY, DATE: Accutrak, Inc. (804) 550-7740, 07/07/2021

REVISED	STATE	STATE ROUTE	STATE PROJECT	SHEET NO.
	VA.	95	0095-076-299,C-501	I7(3)

DESIGN FEATURES RELATING TO CONSTRUCTION OR TO REGULATION AND CONTROL OF TRAFFIC MAY BE SUBJECT TO CHANGE AS DEEMED NECESSARY BY THE DEPARTMENT

COMMONWEALTH OF VIRGINIA
JEFFREY D. CHENG
Lic. No. 051900
PROFESSIONAL ENGINEER

Jeffrey D Cheng
2022.07.20 17:10:02 -04'00'

Whitman, Requardt & Associates
Baltimore, Maryland
TRAFFIC ENGINEER

PLAN NOTES:

1. DISCONNECT AND REMOVE EXISTING CABLES BETWEEN SIGN STRUCTURE AND ADJACENT JUNCTION BOX. ABANDON EXISTING CONDUIT BETWEEN SIGN STRUCTURE AND ADJACENT JUNCTION BOX. MAINTAIN LIGHTING CABLES HEADING NORTH AND SOUTH AND RE-SPLICE AS NECESSARY TO MAINTAIN CIRCUIT CONTINUITY.
2. SEE TMS PLANS FOR INSTALLATION OF LIGHTING CONDUIT WITHIN TMS DUCT BANK.
3. LOCATE AND INTERCEPT EXISTING CONDUIT WITH PROPOSED JUNCTION BOX. SPLICE THE PROPOSED ELECTRICAL CABLES IN THE CONDUIT TO THE NORTH TO THE EXISTING ELECTRICAL CABLES IN THE EXISTING CONDUIT THAT CONTINUES TO THE SOUTH.
4. SPLICE THE 4-#2 CONDUCTOR CABLES (CIRCUITS 13,15 AND 17) IN THE PROPOSED CONDUIT TO THE EXISTING 4-#2 CONDUCTOR CABLES ENTERING THE POLE BASE FROM THE CONDUIT FROM THE SOUTH TO RESTORE POWER TO THE EXISTING LIGHT POLES TO THE SOUTH. RECONNECT THE EXISTING ELECTRICAL CABLES TO THE SAME PHASE AND CIRCUIT NUMBER AS IS EXISTING.
5. TIE PROPOSED CONDUIT INTO EXISTING JUNCTION BOX.
6. Ssplice THE PROPOSED CABLES IN THE CONDUITS TO THE NORTH AND SOUTH WITH THE EXISTING CABLES PROVIDING POWER TO POLE NO. 222-071.
7. CONNECT PROPOSED CONDUIT TO EXISTING CONDUIT ELBOW IN EXISTING FOUNDATION.

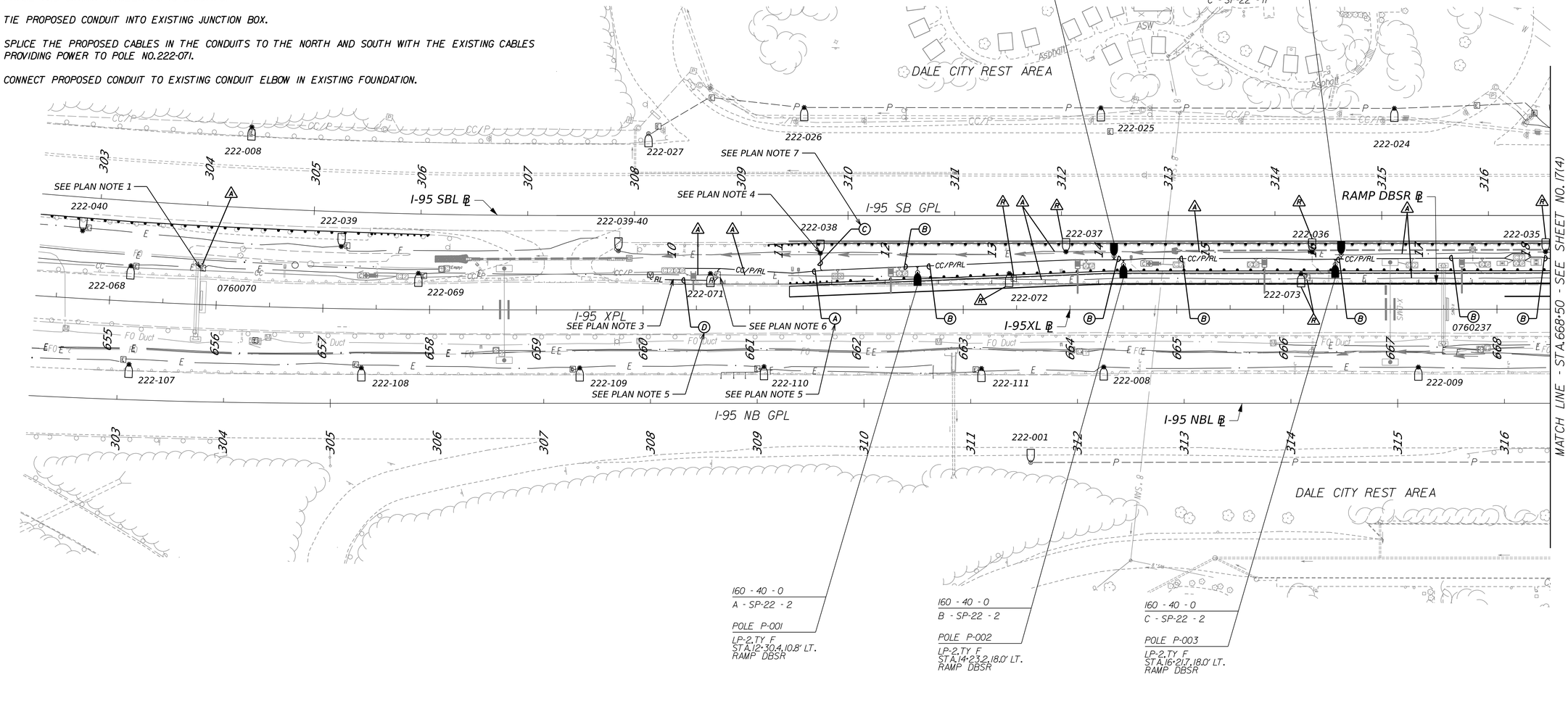

Ⓐ	Ⓑ	Ⓒ	Ⓓ
③	③ ③	③	③
3 - 4#1, 1#1 EGC	3 - 4#1, 1#1 EGC, 3 - 4#2, 1#2 EGC	3 - 4#2, 1#2 EGC	3 - 4#1, 1#1 EGC
SEE PLAN NOTE 2	SEE PLAN NOTE 2	SEE PLAN NOTE 2	

AFC PLANS

SCALE 0 50' 100'

PROJECT	SHEET NO.
0095-076-299	I7(3)

7/20/2022 4589300101I7(04).dgn
3:28:13 PM Plotted By: sswearman

LIMITED ACCESS HIGHWAY

By Resolution of the Highway Commission dated October 4, 1956.
By Resolution of the Highway Commission dated January 18, 1973.
By Resolution of the Commonwealth Transportation Board dated April 19, 2022

PROJECT MANAGER Rimpal Shah, P.E. (703) 259-2362 (NOVA District)
SURVEYED BY, DATE H&B Surveying and Mapping, LLC (804) 330-3781, 03/09/2021
DESIGN BY Whitman, Requardt, & Associates, LLP (804) 212-8700
SUBSURFACE UTILITY BY, DATE Accutrak, Inc. (804) 550-7740, 07/07/2021

COMMONWEALTH OF VIRGINIA
JEFFREY D. CHENG
Lic. No. 051900
PROFESSIONAL ENGINEER

Jeffrey D Cheng
2022.07.20 17:10:21 -04'00'

Whitman, Requardt & Associates
Baltimore, Maryland
TRAFFIC ENGINEER

REVISED	STATE	STATE ROUTE	STATE PROJECT	SHEET NO.
	VA.	95	0095-076-299,C-501	I7(4)

DESIGN FEATURES RELATING TO CONSTRUCTION OR TO REGULATION AND CONTROL OF TRAFFIC MAY BE SUBJECT TO CHANGE AS DEEMED NECESSARY BY THE DEPARTMENT

PLAN NOTES:

1. SEE TMS PLANS FOR INSTALLATION OF LIGHTING CONDUIT WITHIN TMS DUCT BANK.
2. CONNECT PROPOSED CONDUIT TO CONDUIT AND JUNCTION BOXES IN CONCRETE BARRIER.

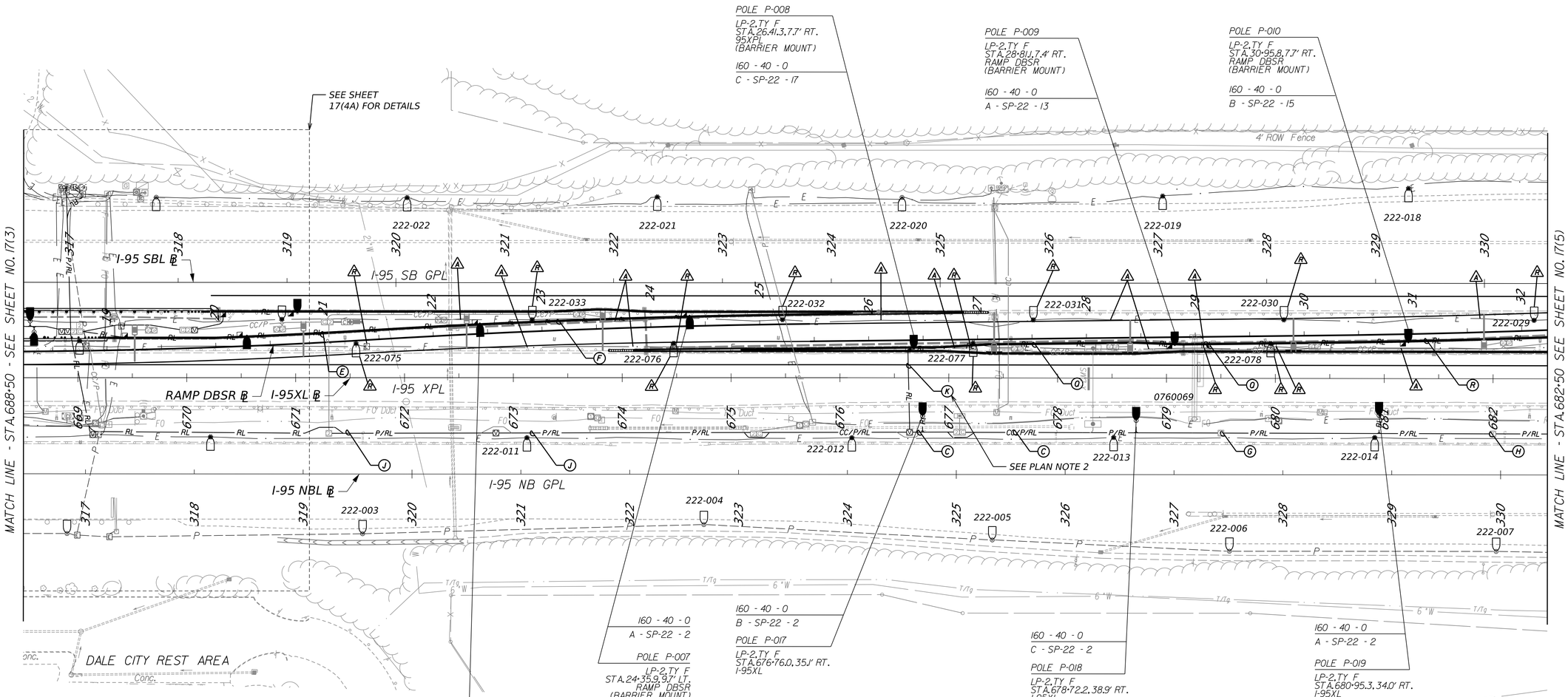

(A)	(B)	(C)	(D)	(E)	(F)	(G)	(H)
3" 3"	2"	3"	2"	2"	2"	3"	3"
3" - 4"I,I"I EGC, 3" - 4"2,I"2 EGC	2" - 4"I,I"I EGC	3" - 4"I,I"I EGC	CONDUIT EMBEDDED IN BARRIER 2" - 4"I,I"I EGC	CONDUIT EMBEDDED IN BARRIER 2" - 3"I,I"I EGC	CONDUIT EMBEDDED IN BARRIER 2" - 2"I,I"I EGC	3" - 3"I,I"I EGC	3" - 2"I,I"I EGC
SEE PLAN NOTE I		SEE PLAN NOTE I				SEE PLAN NOTE I	SEE PLAN NOTE I

(J)	(K)	(L)	(M)	(N)	(P)	(O)	(R)	(S)
3" 3"	2"	4" 4"	4" 4"	3"	2"	2"	2"	2"
3" - 4"I,I"I EGC, 3" - 4"2,I"2 EGC	CONDUIT INSTALLED BY DIRECTIONAL BORE 2" - 4"2,I"2 EGC	CONDUIT INSTALLED BY DIRECTIONAL BORE 4" - 4"I,I"I EGC, 4" - 8"2,I"2 EGC	CONDUIT INSTALLED BY DIRECTIONAL BORE 4" - 4"I,I"I EGC, 4" - 8"2,I"2 EGC	3" - 2"2,I"2 EGC	CONDUIT EMBEDDED IN BARRIER 2" - 2"2,I"2 EGC	CONDUIT EMBEDDED IN BARRIER 2" - 4"2,I"2 EGC	CONDUIT EMBEDDED IN BARRIER 2" - 3"2,I"2 EGC	2" - 2"2,I"2 EGC
SEE PLAN NOTE I		SEE PLAN NOTE I		SEE PLAN NOTE I				

AFC PLANS

SCALE 0 50' 100'

PROJECT	SHEET NO.
0095-076-299	I7(4)

Cell Revised 12/11/12

7/20/2022 4589300101I7(04A).dgn
3:28:36 PM Plotted By: sswearman

LIMITED ACCESS HIGHWAY By Resolution of the Highway Commission dated October 4, 1956.
By Resolution of the Highway Commission dated January 18, 1973.
By Resolution of the Commonwealth Transportation Board dated April 19, 2022

PROJECT MANAGER Rimpal Shah, P.E. (703) 259-2362 (NOVA District) _____
SURVEYED BY, DATE H&B Surveying and Mapping, LLC (804) 330-3781, 03/09/2021
DESIGN BY Whitman, Requardt, & Associates, LLP (804) 212-8700 _____
SUBSURFACE UTILITY BY, DATE Accutark, Inc. (804) 550-7740, 07/07/2021

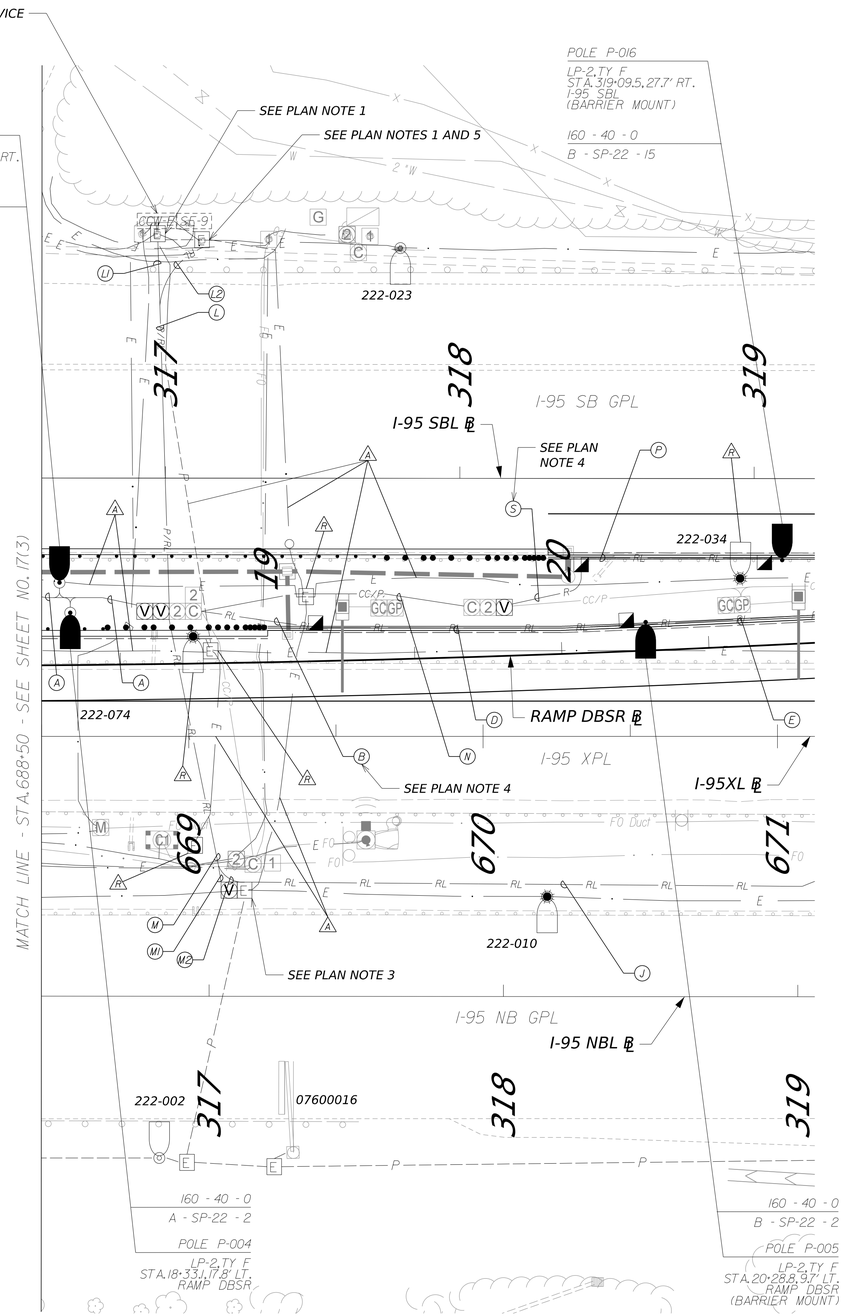

PLAN NOTES:

1. DISCONNECT EXISTING CABLES FOR CIRCUITS 2A,2B,2C AND 8,10,12 FROM EXISTING WIRING TERMINAL OR CIRCUIT BREAKERS AND REMOVE FROM CABINET AND CONDUITS BACK TO THE EXISTING ADJACENT JUNCTION BOXES.FEED THE PROPOSED CABLES FOR CIRCUITS 2A,2B,2C AND 8,10,12 THROUGH THE EXISTING CONDUITS AND INTO THE EXISTING CABINET.CONNECT THE PROPOSED CONDUCTOR CABLES TO THE EXISTING WIRING TERMINAL OR CIRCUIT BREAKERS.
2. SEE TMS PLANS FOR INSTALLATION OF LIGHTING CONDUIT WITHIN TMS DUCT BANK.
3. SPLICE THE 4-#2 CONDUCTOR CABLES (CIRCUITS 8,10 AND 12) IN THE PROPOSED CONDUIT TO THE EXISTING 4-#2 CONDUCTOR CABLES ENTERING THE JUNCTION BOX IN THE EXISTING CONDUITS FROM THE NORTH,SOUTH AND EAST TO RESTORE POWER TO THE EXISITNG LIGHT POLES ALONG I-95 NBL.RECONNECT THE EXISTING ELECTRICAL CABLES TO THE SAME PHASE AND CIRCUIT NUMBER AS IS EXISTING.
4. CONNECT PROPOSED CONDUIT TO CONDUIT AND JUNCTION BOXES IN CONCRETE BARRIER.
5. SPLICE THE PROPOSED CONDUCTOR CABLES FOR CIRCUITS 13,15,17 TO THE EXISTING CONDUCTOR CABLES FOR CIRCUITS 13,15,17 IN THE EXISTING JUNCTION BOX,ENSURING THAT POWER IS MAINTAINED TO THE EXISTING LIGHT POLES ALONG THE I-95 SB CD ROAD THAT ARE CONNECTED TO CIRCUITS 13,15,17.

COMMONWEALTH OF VIRGINIA
JEFFREY D. CHENG
Lic. No. 051900
PROFESSIONAL ENGINEER

Jeffrey D Cheng
2022.07.20 17:10:42 -04'00'
Whitman, Requardt & Associates
Baltimore, Maryland
TRAFFIC ENGINEER

REVISED	STATE	STATE ROUTE	STATE PROJECT	SHEET NO.
	VA.	95	0095-076-299,C-501	I7(4A)

DESIGN FEATURES RELATING TO CONSTRUCTION OR TO REGULATION AND CONTROL OF TRAFFIC MAY BE SUBJECT TO CHANGE AS DEEMED NECESSARY BY THE DEPARTMENT

(A) (3") (3")
3" - 4*1,1*1 EGC,
3" - 4*2,1*2 EGC
SEE PLAN NOTE 2

(B) (2")
2" - 4*1,1*1 EGC

(D) (2")
CONDUIT EMBEDDED IN BARRIER
2" - 4*1,1*1 EGC

(E) (2")
CONDUIT EMBEDDED IN BARRIER
2" - 3*1,1*1 EGC

(J) (3") (3")
3" - 4*1,1*1 EGC,
3" - 4*2,1*2 EGC

(L) (4") (4")
CONDUIT INSTALLED BY DIRECTIONAL BORE
4" - 4*1,1*1 EGC,
4" - 8*2,1*2 EGC
SEE PLAN NOTE 2

(LI) (4")
CONDUIT INSTALLED BY DIRECTIONAL BORE
4" - 4*1,1*1 EGC
SEE PLAN NOTE 2

(L2) (4")
CONDUIT INSTALLED BY DIRECTIONAL BORE
4" - 8*2,1*2 EGC
SEE PLAN NOTE 2

(M) (4") (4")
CONDUIT INSTALLED BY DIRECTIONAL BORE
4" - 4*1,1*1 EGC,
4" - 8*2,1*2 EGC

(MI) (4")
CONDUIT INSTALLED BY DIRECTIONAL BORE
4" - 4*1,1*1 EGC

(M2) (4")
CONDUIT INSTALLED BY DIRECTIONAL BORE
4" - 8*2,1*2 EGC

(N) (3")
3" - 2*2,1*2 EGC
SEE PLAN NOTE 2

(P) (2")
CONDUIT EMBEDDED IN BARRIER
2" - 2*2,1*2 EGC

(S) (2")
2" - 2*2,1*2 EGC

AFC PLANS

	PROJECT	SHEET NO.
	0095-076-299	I7(4A)

Cell Revised 12/1/12

7/20/2022 4589300101I7(05).dgn
3:28:56 PM Plotted By: sswearman

LIMITED ACCESS HIGHWAY

By Resolution of the Highway Commission dated October 4, 1956
By Resolution of the Highway Commission dated January 18, 1973
By Resolution of the Commonwealth Transportation Board dated April 19, 2022

PROJECT MANAGER: Rimpal Shah, P.E. (703) 259-2362 (NOVA District) _____
SURVEYED BY, DATE: B&B Surveying and Mapping, LLC (804) 330-3781, 03/09/2021
DESIGN BY: Whitman, Requardt & Associates, LLP (804) 212-8700 _____
SUBSURFACE UTILITY BY, DATE: Accutark, Inc. (804) 550-7740, 07/07/2021

COMMONWEALTH OF VIRGINIA
JEFFREY D. CHENG
Lic. No. 051900
PROFESSIONAL ENGINEER

Jeffrey D Cheng
2022.07.20 17:11:05 -04'00'

Whitman, Requardt & Associates
Baltimore, Maryland
TRAFFIC ENGINEER

REVISED	STATE	STATE ROUTE	STATE PROJECT	SHEET NO.
	VA.	95	0095-076-299,C-501	I7(5)

DESIGN FEATURES RELATING TO CONSTRUCTION OR TO REGULATION AND CONTROL OF TRAFFIC MAY BE SUBJECT TO CHANGE AS DEEMED NECESSARY BY THE DEPARTMENT

PLAN NOTES:

1. SPLICE THE PROPOSED CABLES TO THE EXISTING CABLES PROVIDING PWOER TO THE LUMINAIRE IN THE EXISTING POLE BASE. PERFORM LOCALIZED GRADING TO ACHIEVE POSITIVE DRAINAGE AWAY FROM LIGHT POLE BASE.
2. DISCONNECT AND REMOVE THE EXISTING 4-#2 CONDUCTOR CABLES FROM THE EXISTING CONDUIT TO THE NORTH DESIGNATED TO BE ABANDONED. SPLICE THE EXISTING CONDUCTOR CABLES FROM THE EXISTING CONDUIT FROM THE SOUTH TO THE 2-#2 CONDUCTOR CABLES IN THE PROPOSED CONDUIT TO THE SAME PHASE AND CIRCUIT NUMBER AS IS EXISTING.
3. DISCONNECT EXISTING CONDUIT AND CONNECT PROPOSED CONDUIT TO THE EXISTING CONDUIT ELBOW IN THE EXISTING FOUNDATION.
4. TIE THE PROPOSED CONDUIT INTO THE EXSITING JUNCTION BOX.
5. CONNECT PROPOSED CONDUIT TO CONDUIT AND JUNCTION BOXES IN CONCRETE BARRIER.
6. SEE TMS PLANS FOR INSTALLATION OF LIGHTING CONDUIT WITHIN TMS DUCT BANK.

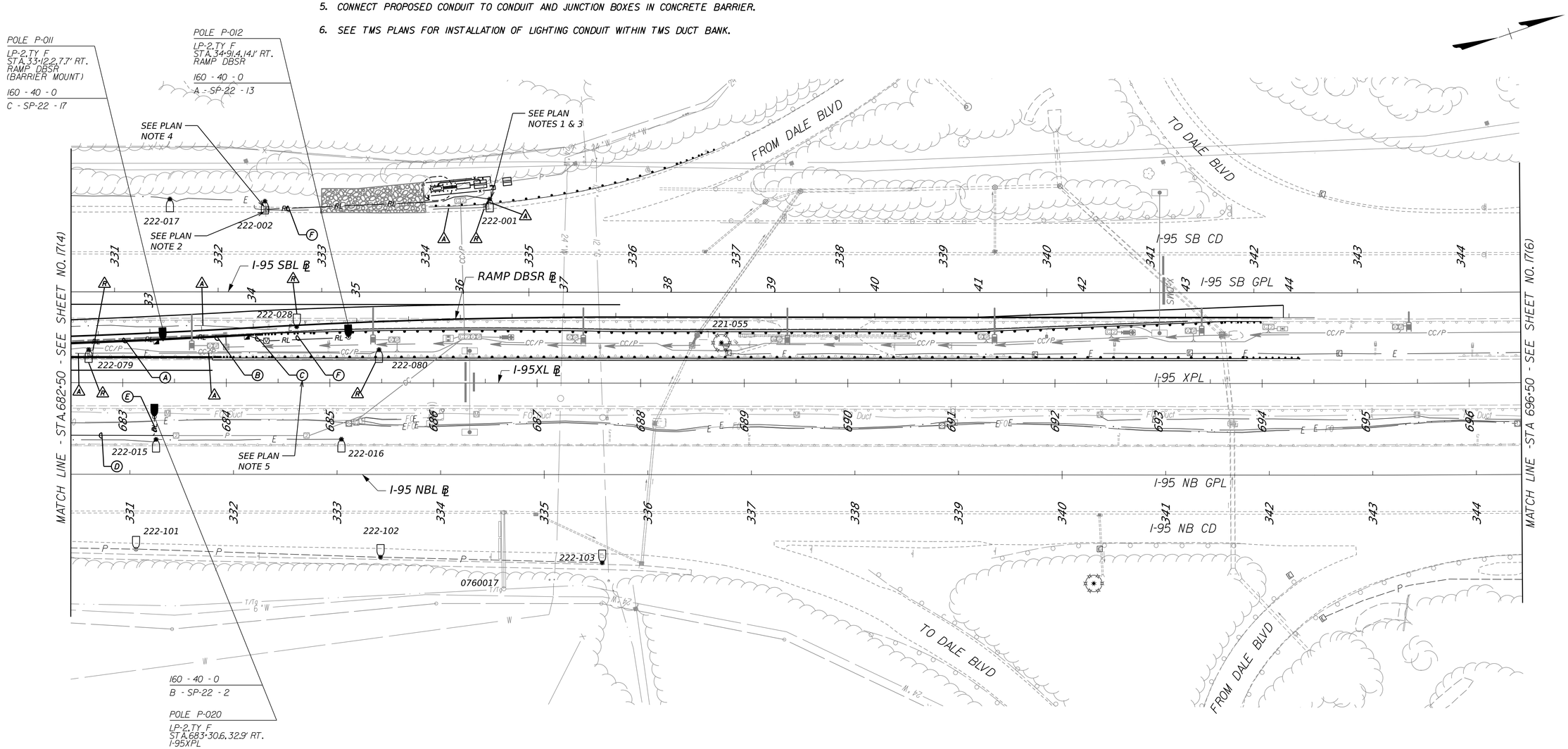

Ⓐ 2	Ⓑ 2	Ⓒ 2	Ⓓ 3	Ⓔ 3	Ⓕ 3
CONDUIT EMBEDDED IN BARRIER 2 - 3#2,1#2 EGC	CONDUIT EMBEDDED IN BARRIER 2 - 2#2,1#2 EGC	2 - 2#2,1#2 EGC	3 - 2#1,1#1 EGC SEE PLAN NOTE 6	3 - 2#1,1#1 EGC	3 - 2#2,1#2 EGC

AFC PLANS

SCALE 0 50' 100'

PROJECT	SHEET NO.
0095-076-299	I7(5)

Roll Revised 12/11/12

7/20/2022 4589300101I7(06).dgn
3:29:18 PM Plotted By: sswearman

LIMITED ACCESS HIGHWAY

By Resolution of the Highway Commission dated October 4, 1956.
By Resolution of the Highway Commission dated January 18, 1973.
By Resolution of the Commonwealth Transportation Board dated April 19, 2022

PROJECT MANAGER: Rimpal Shah, P.E. (703) 259-2362 (NOVA District)
SURVEYED BY, DATE: H&B Surveying and Mapping, LLC (804) 330-3781, 03/09/2021
DESIGN BY: Whitman, Requardt, & Associates, LLP (804) 212-8700
SUBSURFACE UTILITY BY, DATE: Accumark, Inc. (804) 550-1740, 07/07/2021

COMMONWEALTH OF VIRGINIA
JEFFREY D. CHENG
Lic. No. 051900
PROFESSIONAL ENGINEER

Jeffrey D Cheng
2022.07.20 17:11:24 -04'00'

Whitman, Requardt & Associates
Baltimore, Maryland
TRAFFIC ENGINEER

REVISED	STATE	STATE ROUTE	STATE PROJECT	SHEET NO.
	VA.	95	0095-076-299,C-501	I7(6)

DESIGN FEATURES RELATING TO CONSTRUCTION OR TO REGULATION AND CONTROL OF TRAFFIC MAY BE SUBJECT TO CHANGE AS DEEMED NECESSARY BY THE DEPARTMENT

PLAN NOTES:

1. NO PROPOSED LIGHTING WORK ON THIS PLAN

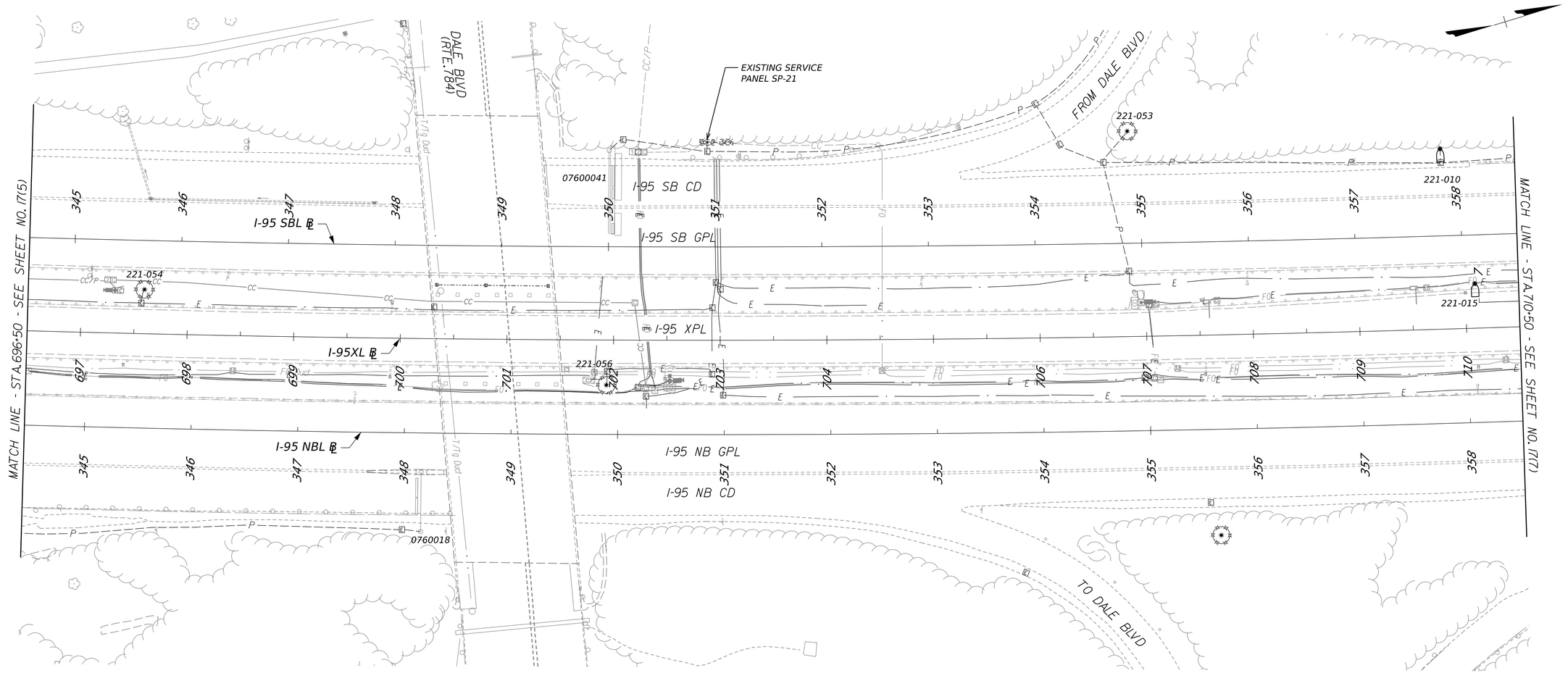

AFC PLANS

SCALE 0 50' 100'

PROJECT	SHEET NO.
0095-076-299	I7(6)

Civil Revised 12/11/12

7/20/2022 4589300101I7(07).dgn
3:29:37 PM Plotted By: sswearman

LIMITED ACCESS HIGHWAY

By Resolution of the Highway Commission dated October 4, 1956.
By Resolution of the Highway Commission dated January 18, 1973.
By Resolution of the Commonwealth Transportation Board dated April 19, 2022

PROJECT MANAGER Rimpal Shah, P.E. (703) 259-2362 (NOVA District) _____
SURVEYED BY, DATE B&B Surveying and Mapping, LLC (804) 330-3781, 03/09/2021
DESIGN BY Whitman, Requardt & Associates, LLP (804) 212-8700 _____
SUBSURFACE UTILITY BY, DATE Accutrack, Inc. (804) 550-7740, 07/07/2021

REVISED	STATE	STATE ROUTE	STATE PROJECT	SHEET NO.
	VA.	95	0095-076-299,C-501	I7(7)

DESIGN FEATURES RELATING TO CONSTRUCTION OR TO REGULATION AND CONTROL OF TRAFFIC MAY BE SUBJECT TO CHANGE AS DEEMED NECESSARY BY THE DEPARTMENT

COMMONWEALTH OF VIRGINIA
JEFFREY D. CHENG
Lic. No. 051900
PROFESSIONAL ENGINEER

Jeffrey D Cheng
2022.07.20 17:11:44 -04'00'

Whitman, Requardt & Associates
Baltimore, Maryland
TRAFFIC ENGINEER

PLAN NOTES:

1. DISCONNECT AND REMOVE EXISTING CABLES BETWEEN SIGN STRUCTURE AND ADJACENT JUNCTION BOX. ABANDON EXISTING CONDUIT BETWEEN SIGN STRUCTURE AND ADJACENT JUNCTION BOX. MAINTAIN LIGHTING CABLES HEADING NORTH AND SOUTH AND RE-SPLICE AS NECESSARY TO MAINTAIN CIRCUIT CONTINUITY.

2. TIE PROPOSED CONDUIT INTO EXISTING JUNCTION BOX. 'Y' SPLICE PROPOSED 4-#2 CONDUCTORS TO EXISTING CONDUCTORS WITHIN EXISTING JUNCTION BOX. SPLICE CABLES TO THE SAME PHASE AND CIRCUIT AS IS EXISTING SO THAT POWER IS MAINTAINED IN THE CONDUIT TO POLE NO. 221-005 AND THE OTHER EXISTING LIGHT POLES TO THE NORTH.

3. COUPLE PROPOSED CONDUIT IN PROPOSED BARRIER TO EXISTING CONDUIT IN EXISTING BARRIER. REMOVE CABLES FROM EXISTING CONDUIT BACK TO EXISTING JUNCTION BOX. FEED PROPOSED CABLES THROUGH PROPOSED AND EXISTING CONDUIT TO EXISTING JUNCTION BOX AND SPLICE TO EXISTING CABLES.

4. TRANSITION CONDUIT FROM RETAINING WALL PARAPET TO ROADWAY BARRIER.

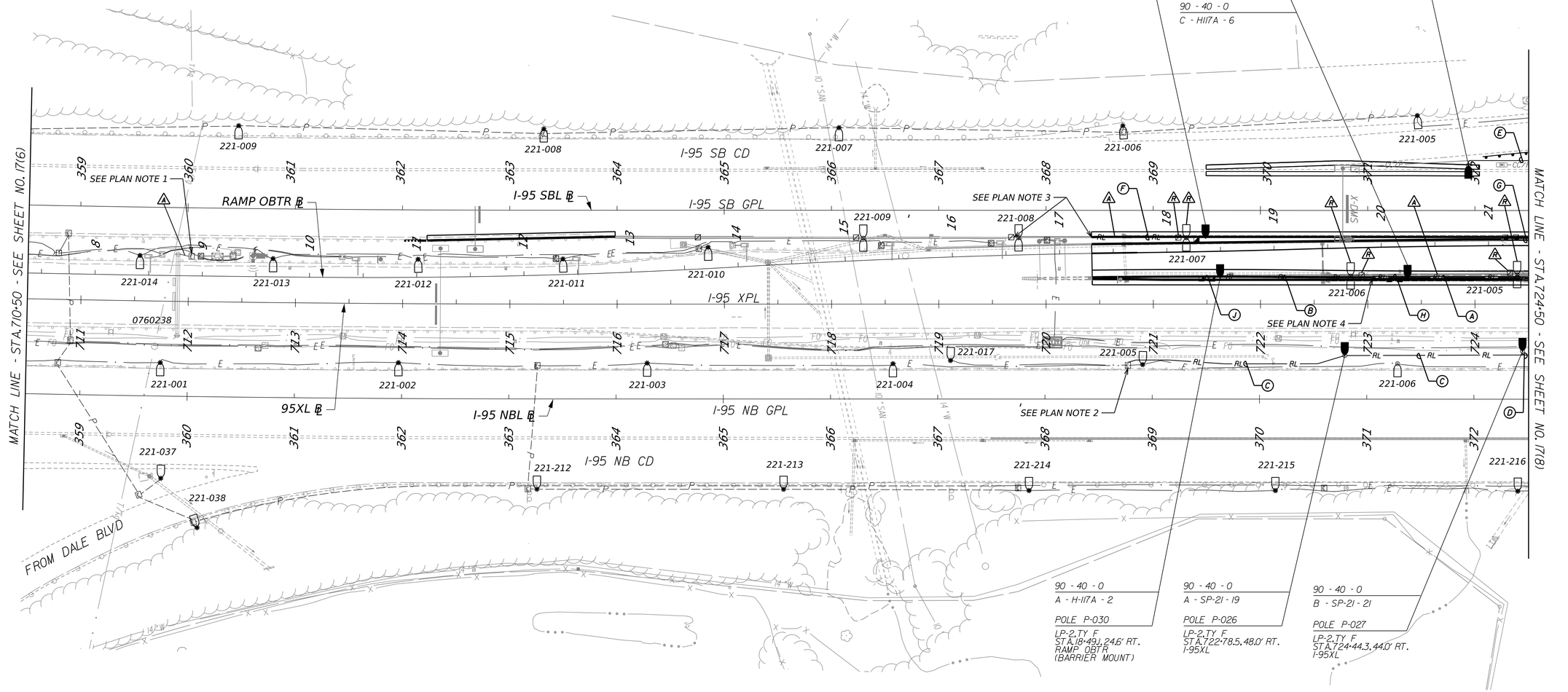

(A) (2") (2") CONDUIT EMBEDDED IN STRUCTURE 2" - 3#6,1#6 EGC. 2" - EMPTY	(B) (2") (2") CONDUIT EMBEDDED IN BARRIER 2" - 2#6,1#6 EGC. 2" - EMPTY	(C) (3") 3" - 4#2,1#2 EGC	(D) (3") 3" - 3#2,1#2 EGC	(E) (3") 3" - 2#6,1#6 EGC CONDUIT INSTALLED PER STD.ECI-2	(F) (2") CONDUIT EMBEDDED IN BARRIER 2" - 2#6,1#6 EGC	(G) (2") (2") CONDUIT EMBEDDED IN STRUCTURE 2" - EMPTY 2" - EMPTY	(H) (2") (2") CONDUIT EMBEDDED IN STRUCTURE 2" - 2#6,1#6 EGC. 2" - EMPTY	(J) (2") (2") CONDUIT EMBEDDED IN BARRIER 2" - EMPTY 2" - EMPTY

AFC PLANS

SCALE 0 50' 100'

PROJECT	SHEET NO.
0095-076-299	I7(7)

Cell Revised 12/11/12

7/20/2022 4589300101I7(08).dgn
3:30:17 PM Plotted By: sswearman

LIMITED ACCESS HIGHWAY

By Resolution of the Highway Commission dated October 4, 1956.
By Resolution of the Highway Commission dated January 18, 1973.
By Resolution of the Commonwealth Transportation Board dated April 19, 2022

PROJECT MANAGER Rimpal Shah, P.E. (703) 259-2362 (NOVA District) _____
SURVEYED BY, DATE B&B Surveying and Mapping, LLC (804) 330-3781, 03/09/2021
DESIGN BY Whitman, Requardt & Associates, LLP (804) 212-8700 _____
SUBSURFACE UTILITY BY, DATE Accutrack Inc. (804) 550-7140, 07/07/2021

COMMONWEALTH OF VIRGINIA
JEFFREY D. CHENG
Lic. No. 051900
PROFESSIONAL ENGINEER

Jeffrey D Cheng
2022.07.20 17:12:05 -04'00'

Whitman, Requardt & Associates
Baltimore, Maryland
TRAFFIC ENGINEER

REVISED	STATE	STATE ROUTE	STATE PROJECT	SHEET NO.
	VA.	95	0095-076-299,C-501	I7(8)

DESIGN FEATURES RELATING TO CONSTRUCTION OR TO REGULATION AND CONTROL OF TRAFFIC MAY BE SUBJECT TO CHANGE AS DEEMED NECESSARY BY THE DEPARTMENT

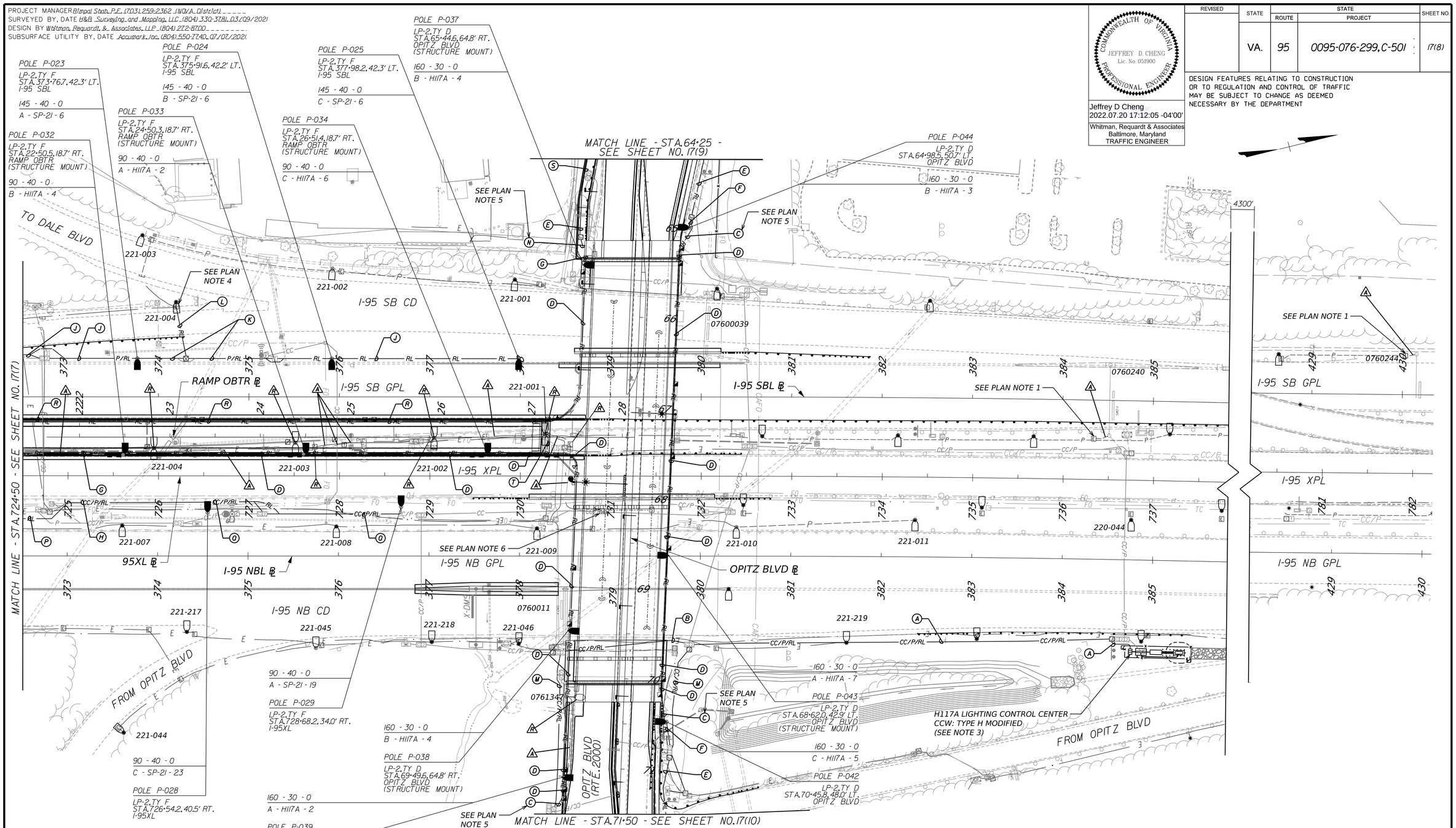

PLAN NOTES:

1. DISCONNECT EXISTING SIGN LIGHTING CABLES AND REMOVE BETWEEN SIGN STRUCTURE AND ADJACENT JUNCTION BOX. ABANDON EXISTING CONDUIT BETWEEN SIGN STRUCTURE AND ADJACENT JUNCTION BOX. MAINTAIN LIGHTING CABLES HEADING NORTH AND SOUTH AND RE-SPLICE AS NECESSARY TO MAINTAIN CIRCUIT CONTINUITY.
2. SEE TMS PLANS FOR INSTALLATION OF LIGHTING CONDUIT WITHIN TMS DUCT BANK.
3. REFER TO SHEETS I5(2C1), I5(2D3), AND I5(2D4) FOR LIGHTING CONTROL CENTER DETAILS.
4. TIE THE PROPOSED CONDUIT INTO THE EXISTING JUNCTION BOX.
5. CONNECT THE PROPOSED CONDUIT TO THE PROPOSED CONDUIT AND JUNCTION BOXES IN STRUCTURE.
6. DISCONNECT AND REMOVE EXISTING CABLES IN CONDUIT CROSSING THE EXPRESS LANES TOWARDS POLE 221-001. RESPLICE CABLES TO RESTORE POWER TO THE EXISTING UNDERPASS LIGHTING CONNECTING CABLES TO THE SAME PHASE AND CIRCUIT AS EXISTING.
7. REFER TO STRUCTURE PLANS FOR INSTALLATION DETAILS OF CONDUITS AND JUNCTION BOXES EMBEDDED IN STRUCTURES.

AFC PLANS

SCALE 0 50' 100'

PROJECT	SHEET NO.
0095-076-299	I7(8)

Cell Revised 12/11/12

LIMITED ACCESS HIGHWAY

By Resolution of the Highway Commission dated October 4, 1956.
By Resolution of the Highway Commission dated January 18, 1973.
By Resolution of the Commonwealth Transportation Board dated April 19, 2022

PROJECT MANAGER Rimpal Shah, P.E. (703) 259-2362 (NOVA District)
SURVEYED BY, DATE H&B Surveying and Mapping, LLC (804) 330-3781, 03/09/2021
DESIGN BY Whitman, Requardt, & Associates, LLP (804) 212-8700
SUBSURFACE UTILITY BY, DATE Accumark, Inc. (804) 550-7740, 07/07/2021

COMMONWEALTH OF VIRGINIA
JEFFREY D. CHENG
Lic. No. 051900
PROFESSIONAL ENGINEER

Jeffrey D Cheng
2022.07.20 17:12:24 -04'00'

Whitman, Requardt & Associates
Baltimore, Maryland
TRAFFIC ENGINEER

REVISED	STATE	STATE ROUTE	STATE PROJECT	SHEET NO.
	VA.	95	0095-076-299,C-501	I7(8A)

DESIGN FEATURES RELATING TO CONSTRUCTION OR TO REGULATION AND CONTROL OF TRAFFIC MAY BE SUBJECT TO CHANGE AS DEEMED NECESSARY BY THE DEPARTMENT

MATCH LINE - STA.724+50 - SEE SHEET NO. I7(7)

A
3" 3"
3" - 8*6,1*6 EGC.
3" - EMPTY
SEE PLAN NOTE 2 ON SHEET I7(8)

B
3" 3"
CONDUIT INSTALLED BY DIRECTIONAL BORE
3" - 4*6,1*6 EGC.
3" - EMPTY
SEE PLAN NOTE 2 ON SHEET I7(8)

C
2" 2"
2" - 4*6,1*6 EGC.
2" - EMPTY

D
2" 2"
CONDUIT EMBEDDED IN STRUCTURE
2" - 4*6,1*6 EGC.
2" - EMPTY

E
3"
3" - 3*6,1*6 EGC

F
3"
3" - 2*6,1*6 EGC

G
2" 2"
CONDUIT EMBEDDED IN STRUCTURE
2" - 3*6,1*6 EGC.
2" - EMPTY

H
3"
3" - 3*2,1*2 EGC
SEE PLAN NOTE 2 ON SHEET I7(8)

J
3"
3" - 2*6,1*6 EGC
CONDUIT INSTALLED PER STD.ECI-2

K
3"
3" - 3*6,1*6 EGC
CONDUIT INSTALLED PER STD.ECI-2

L
4"
CONDUIT INSTALLED BY DIRECTIONAL BORE
4" - 4*6,1*6 EGC

M
3"
3" - 4*6,1*6 EGC
SEE PLAN NOTE 2 ON SHEET I7(8)

N
2" 2"
2"* - 3*6,1*6 EGC.
2" - EMPTY

P
3"
3" - 3*2,1*2 EGC

Q
3"
3" - 2*2,1*2 EGC
SEE PLAN NOTE 2 ON SHEET I7(8)

R
2" 2"
CONDUIT EMBEDDED IN STRUCTURE
2" - EMPTY
2" - EMPTY

S
3"
3" - 3*6,1*6 EGC
SEE PLAN NOTE 2 ON SHEET I7(8)

T
2" 2"
CONDUIT MOUNTED ON STRUCTURE
2" - 4*6,1*6 EGC.
2" - EMPTY

AFC PLANS

	PROJECT	SHEET NO.
	0095-076-299	I7(8A)

7/20/2022 4589300101I7(09).dgn
3:31:14 PM Plotted By: sswearman

LIMITED ACCESS HIGHWAY

By Resolution of the Highway Commission dated October 4, 1956.
By Resolution of the Highway Commission dated January 18, 1973.
By Resolution of the Commonwealth Transportation Board dated April 19, 2022

PROJECT MANAGER Rimpal Shah, P.E. (703) 259-2362 (NOVA District)
SURVEYED BY, DATE H&B Surveying and Mapping, LLC (804) 330-3781, 03/09/2021
DESIGN BY Whitman, Requardt, & Associates, LLP (804) 212-8700
SUBSURFACE UTILITY BY, DATE Accutrak, Inc. (804) 550-7740, 07/07/2021

COMMONWEALTH OF VIRGINIA
JEFFREY D. CHENG
Lic. No. 051900
PROFESSIONAL ENGINEER

Jeffrey D Cheng
2022.07.20 17:12:44 -04'00'

Whitman, Requardt & Associates
Baltimore, Maryland
TRAFFIC ENGINEER

REVISED	STATE	STATE ROUTE	STATE PROJECT	SHEET NO.
	VA.	95	0095-076-299,C-501	I7(9)

DESIGN FEATURES RELATING TO CONSTRUCTION OR TO REGULATION AND CONTROL OF TRAFFIC MAY BE SUBJECT TO CHANGE AS DEEMED NECESSARY BY THE DEPARTMENT

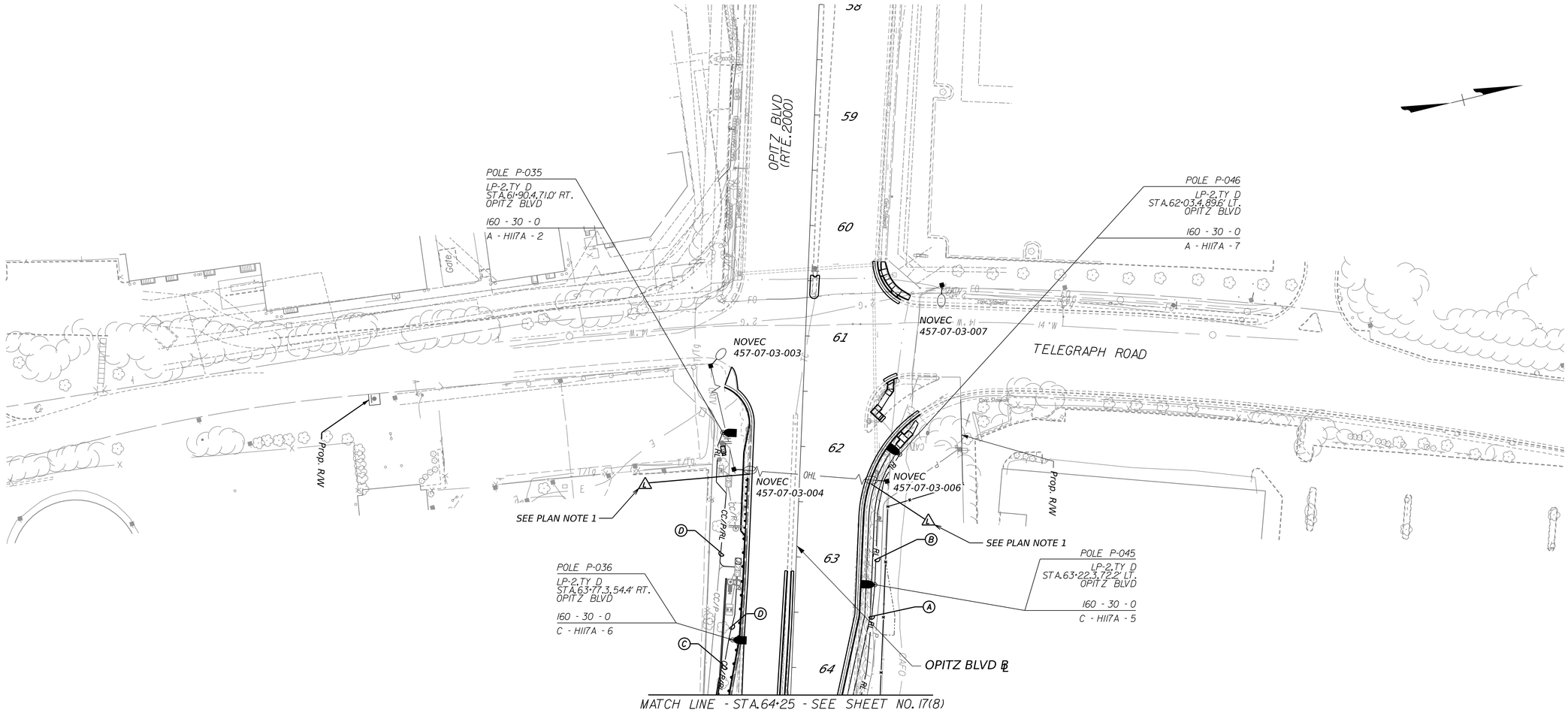

PLAN NOTES:

1. COORDINATE THE REMOVAL OF THE UTILITY POLE MOUNTED LEASED LIGHTS WITH THE 95 EXPRESS LANES ENGINEER AND THE PRINCE WILLIAM COUNTY STREET LIGHTING COORDINATOR RICHARD HAGSTROM (703-792-6823). REFERENCE NOVEC WORK REQUEST NO. I70567.

2. SEE TMS PLANS FOR INSTALLATION OF LIGHTING CONDUIT WITHIN TMS DUCT BANK.

Ⓐ 3"	Ⓑ 3"	Ⓒ 3"	Ⓓ 3"
3 - 3*6,1*6 EGC	3 - 2*6,1*6 EGC	3 - 3*6,1*6 EGC	3 - 2*6,1*6 EGC
		SEE PLAN NOTE 2	SEE PLAN NOTE 2

AFC PLANS

SCALE 0 50' 100'

PROJECT	SHEET NO.
0095-076-299	I7(9)

Cell Revised 12/11/12

LIMITED ACCESS HIGHWAY

By Resolution of the Highway Commission dated October 4, 1956.
By Resolution of the Highway Commission dated January 18, 1973.
By Resolution of the Commonwealth Transportation Board dated April 19, 2022

PROJECT MANAGER: Rimpal Shah, P.E. (703) 259-2362 (NOVA District)
SURVEYED BY, DATE: H&B Surveying and Mapping, LLC (804) 330-3781, 03/09/2021
DESIGN BY: Whitman, Requardt, & Associates, LLP (804) 212-8700
SUBSURFACE UTILITY BY, DATE: Accumark, Inc. (804) 550-7740, 07/07/2021

COMMONWEALTH OF VIRGINIA
JEFFREY D. CHENG
Lic. No. 051900
PROFESSIONAL ENGINEER

Jeffrey D Cheng
2022.07.20 17:13:01 -04'00'

Whitman, Requardt & Associates
Baltimore, Maryland
TRAFFIC ENGINEER

REVISED	STATE	STATE ROUTE	STATE PROJECT	SHEET NO.
	VA.	95	0095-076-299,C-501	I7(10)

DESIGN FEATURES RELATING TO CONSTRUCTION OR TO REGULATION AND CONTROL OF TRAFFIC MAY BE SUBJECT TO CHANGE AS DEEMED NECESSARY BY THE DEPARTMENT

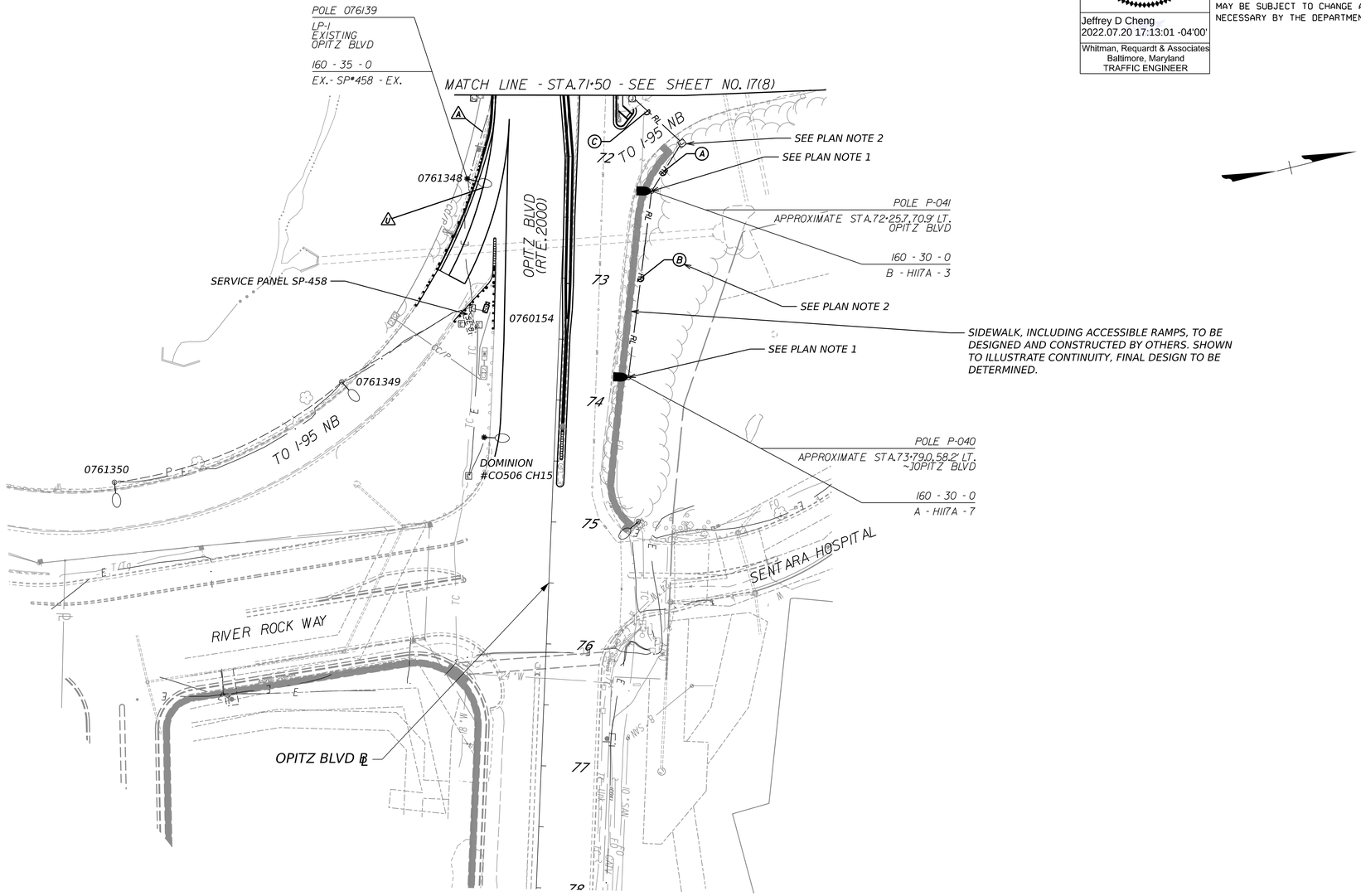

PLAN NOTES:

1. LIGHT POLE, LUMINAIRE, AND LIGHT POLE SUPPORT/FOUNDATION OR INTEGRAL STRUCTURE TO BE PROVIDED BY OTHERS, THE PRINCE WILLIAM COUTY NEABSCO/POTOMAC COMMUNITY PARKING GARAGE PROJECT.
2. CONDUIT AND JUNCTION BOX INSTALLED BY OTHERS, THE PRINCE WILLIAM COUNTY NEABSCO/POTOMAC COMMUNITY PARKING GARAGE PROJECT.
3. THE PRINCE WILLIAM COUNTY NEABSCO/POTOMAC COMMUNITY PARKING GARAGE PROJECT IS RESPONSIBLE FOR PROVIDING LIGHT POLES, LUMINAIRES, CONDUITS, JUNCTION BOXES, ANCHOR BOLTS, AND LIGHT POLE SUPPORTS (FOUNDATIONS OR INTEGRAL STRUCTURAL SUPPORTS) FOR LIGHTING ON THE NORTH SIDE OF OPITZ BLVD BETWEEN SENTARA HOSPITAL AND THE RAMP TO I-95 NB. THE CONTRACTOR SHALL INSTALL CONDUIT TO CONNECT TO THE JUNCTION BOX PROVIDED BY OTHERS AND SHALL INSTALL ALL ELECTRICAL CABLE TO ENERGIZE THE LIGHTING AS SHOWN ON THE PLANS.

(A) (3")	(B) (3")	(C) (4")
3" - 3*6, 1*6 EGC	3" - 2*6, 1*6 EGC	CONDUIT INSTALLED BY DIRECTIONAL BORE
SEE PLAN NOTE 2	SEE PLAN NOTE 2	4" - 3*6, 1*6 EGC

AFC PLANS

SCALE
0 50' 100'

PROJECT	SHEET NO.
0095-076-299	I7(10)

Cell Revised 12/11/12

PROJECT MANAGER Rimpal Shah, P.E. (703) 259-2362 (NOVA District) _____
SURVEYED BY, DATE H&B Surveying and Mapping, LLC (804) 330-3781, 03/09/2021
DESIGN BY Whitman, Requardt & Associates, LLP (804) 272-8700 _____
SUBSURFACE UTILITY BY, DATE Accumark, Inc. (804) 550-7740, 07/07/2021.

TRAFFIC SIGNAL GENERAL NOTES

GENERAL NOTES - SIGNAL

1. ALL WORK SHALL BE IN ACCORDANCE WITH THE CURRENT EDITION OF THE MANUAL ON UNIFORM TRAFFIC CONTROL DEVICES (MUTCD), THE CURRENT EDITION OF THE VIRGINIA SUPPLEMENT TO THE MUTCD, THE CURRENT EDITION OF THE VDOT ROAD AND BRIDGE STANDARDS, THE CURRENT EDITION OF VDOT ROAD AND BRIDGE SPECIFICATIONS, AND SPECIAL PROVISIONS.
2. THE CONTRACTOR SHALL BE RESPONSIBLE FOR CONTACTING MISS UTILITY AND SCHEDULING THE LOCATING OF UNDERGROUND UTILITIES, AS WELL AS NOTIFYING VDOT'S ENGINEER WHO WILL CONTACT DAVID ROUTT (703-334-0230) TO LOCATE AND MARK ANY SIGNAL CABLES OR TRAFFIC EQUIPMENT WITHIN 1,000 FT OF THE PROJECT'S LIMITS. ALL UTILITIES AND EXISTING SIGNAL EQUIPMENT SHALL BE MARKED PRIOR TO INITIATION OF ANY CONSTRUCTION.
3. PRIOR TO BEGINNING ANY SIGNALIZATION WORK, THE CONTRACTOR SHALL NOTIFY THE ENGINEER IN WRITING FIVE WORKING DAYS PRIOR TO COMMENCING ANY WORK AT AN EXISTING SIGNAL, AND PROVIDE THE FOLLOWING:

   a. CONTRACTOR DAYTIME AND EMERGENCY TELEPHONE NUMBERS.
   b. LOCATION OF INTERSECTION WHERE WORK IS TAKING PLACE.

4. THE CONTRACTOR SHALL MAINTAIN ALL EXISTING TRAFFIC SIGNAL EQUIPMENT (INCLUDING POWER AND COMMUNICATIONS) UNLESS OTHERWISE NOTED ON THE PLANS. INSTALLATION OF EQUIPMENT SHALL NOT DISRUPT OPERATION OF EXISTING SIGNAL UNLESS APPROVED BY THE ENGINEER.
5. ALL PROPOSED SIGNAL EQUIPMENT SHALL BE INSTALLED PRIOR TO DEACTIVATION OF EXISTING SIGNAL FOR WIRING SWITCH OVER. THE CONTRACTOR SHALL MAKE ARRANGEMENTS TO HAVE VDOT'S NROIC PERSONNEL PRESENT DURING SWITCHOVER (703-334-0882, BETWEEN 5:00 AM AND 7:00 PM, MONDAY-FRIDAY). A MINIMUM OF 48 HOURS ADVANCE NOTICE IS REQUIRED. THE CONTRACTOR SHALL HAVE HIS QUALIFIED REPRESENTATIVE PRESENT TO MONITOR TRAFFIC FLOW AND ADJUST TIMINGS AS NECESSARY, OR AS DIRECTED BY THE ENGINEER.
6. THE PROJECT IS RESPONSIBLE FOR OBTAINING THE LATEST VDOT APPROVED CONTROLLER, UPS ASSEMBLY AND CABINET THROUGH THE VDOT NORTHERN REGIONAL OPERATIONAL INSTALLATION & CONSTRUCTION (NROIC) SECTION OF THE NOVA DISTRICT. PAYMENT(S) FOR THE CONTROLLER, UPS ASSEMBLY AND CABINET IS REQUIRED PRIOR TO THE PROJECT RECEIVING THE EQUIPMENT. IN ORDER TO AVOID DELAYS IN OBTAINING THE CONTROLLER, UPS ASSEMBLY AND CABINET, NROIC REQUIRES NOTIFICATION AND PAYMENT TWO (2) MONTHS PRIOR TO THE START OF ANY CONSTRUCTION. THE PROJECT SHALL CONTACT NROIC (CLIFFORD MERRICK @ 703.334.0366) TO ARRANGE FOR THE PURCHASE AND PICK-UP OF THE CONTROLLER, UPS ASSEMBLY AND CABINET. TWO (2) WEEKS PRIOR TO THE AGREED UPON PICK-UP DATE, THE PROJECT SHALL CONTACT NROIC TO VERIFY EQUIPMENT AVAILABILITY. THE PROJECT SHALL PICK-UP THE CONTROLLER, UPS ASSEMBLY AND CABINET AT NROIC'S TFO FACILITY AT 8010 MASON KING COURT, MANASSAS VA 20109. UPON RECEIPT OF THE 2070 SPEC CONTROLLER, UPS ASSEMBLY AND CABINET FROM VDOT, THE PROJECT'S QUALIFIED REPRESENTATIVE SHALL WIRE THE CABINET, PROGRAM AND TEST THE PHASING OF THE INTERSECTION AS SHOWN ON THE PLAN. THE PROJECT SHALL PROVIDE A CERTIFICATION LETTER TO VDOT INDICATING THAT THE WORK IS IN COMPLIANCE WITH VDOT STANDARDS AND IS CONSISTENET WITH THE PHASING AS PER THE SIGNAL PLAN. AS PART OF THE INSTALLATION, THE PROJECT IS RESPONSIBLE FOR PROVIDING THE CONRETE FOUNDATION SPECIFIED AS ST'D CF-3 MODIFIED PER THE STRUCTURAL PLANS (SEE SHEET NO. 67) AND THE COMMUNICATIONS COMPANY ACCESS COMPARTMENT SHOWN AS CC-2.
7. THE CONTRACTOR SHALL BE RESPONSIBLE FOR MAINTAINING DETECTION ON ALL APPROACHES TO THE INTERSECTION AT ALL TIMES AND THROUGHOUT ALL PHASES OF CONSTRUCTION. COORDINATED SIGNAL OPERATIONS SHALL BE MAINTAINED AT ALL TIMES. ONCE MODIFICATIONS ARE STARTED, IT IS THE SOLE RESPONSIBILITY OF THE CONTRACTOR UNTIL THE TRAFFIC SIGNAL IS ACCEPTED INTO THE VDOT SIGNAL SYSTEM.
8. THE CONTRACTOR IS RESPONSIBLE FOR ALL MOT ASSOCIATED WITH THE INSTALLATION OF THE PROPOSED TRAFFIC SIGNAL EQUIPMENT.
9. EXISTING CCTV SHALL REMAIN OPERATIONAL AND FULLY FUNCTIONAL WITHOUT INTERRUPTION FOR THE DURATION OF CONSTRUCTION.
10. NO TRAFFIC SIGNAL SHALL BE PLACED INTO OPERATION UNTIL THE LOCATION IS 100% COMPLETE. THIS INCLUDES ANY NECESSARY PAVEMENT MARKINGS AND SIGNAGE SHOWN ON THE PLANS AND THAT THE TRAFFIC SIGNAL COMMUNICATION REQUIREMENTS ARE COMPLETE AND OPERATIONAL.
11. NEW TRAFFIC SIGNAL INSTALLATIONS SHALL NOT BE PLACED INTO COLOR OPERATION ON MONDAYS, FRIDAYS OR DAYS PRECEEDING OR FOLLOWING HOLIDAYS, UNLESS DIRECTED BY THE DISTRICT TRAFFIC ENGINEER.

BROADBAND WIRELESS COMMUNICATION

1. THE PROJECT SHALL BE RESPONSIBLE FOR PROVIDING AND MAINTAINING COMMUNICATION TO THE TRAFFIC SIGNAL CONTROLLER AT ALL TIMES. THE PROJECT IS RESPONSIBLE FOR ALL COSTS ASSOCIATED WITH PROVIDING COMMUNICATION TO THE TRAFFIC SIGNAL. THE PROJECT SHALL BE RESPONSIBLE FOR COORDINATING THE LOCATION AND THE INSTALLATION OF THE COMMUNICATION CIRCUIT CONDUIT(S) AND EQUIPMENT TO THE TRAFFIC SIGNAL CONTROLLER CABINET FOR THE DESIGNATED COMMUNICATION PLATFORM.
2. THE PROJECT SHALL CONTACT VDOT'S NORTHERN REGION OPERATIONS COMMUNICATIONS GROUP at NOVATFOCOMM@VDOT.VIRGINIA.GOV NINETY (90) DAYS PRIOR TO THE START OF THE TRAFFIC SIGNAL CONSTRUCTION TO IDENTIFY THE DESIGNATED COMMUNICATION PLATFORM AND TO INITIATE THE BROADBAND CIRCUIT ORDERING PROCESS.
3. THIS PROPOSED TRAFFIC SIGNAL PROJECT SHALL UTILIZE VDOTS NORTHERN REGION WIRELESS COMMUNICATION PLATFORM. THE PROJECT SHALL CONTACT VDOTS COMM GROUP AS DETAILED IN NOTE 2 ABOVE AT NOVATFOCOMM@VDOT.VIRGINIA.GOV REGARDING THE INSTALLATION REQUIREMENTS AND WIRELESS COMMUNICATION EQUIPMENT DETAILS.
4. THE 1" METAL CONDUIT THAT IS INSTALLED AS PART OF THE COMMUNICATION CIRCUIT (ST'D CC-2 ON THE CONTROLLER CABINET) SHALL BE TERMINATED INTO A JUNCTION BOX LOCATED 12" TO 24" FROM THE CONTROLLER CABINET FOUNDATION. THE 2" CONDUIT FROM THE DESIGNATED COMMUNICATION PROVIDER CONNECTION POINT TO THE CONTROLLER CABINET SHALL BE TERMINATED INTO THIS JUNCTION BOX. THE COVER SHALL HAVE "COMM" CAST IN THE DEPRESSION ON TOP AS DETAILED IN THE JUNCTION BOX. PULL ROPE RATED AT 1100 LBS. SHALL BE INSTALLED IN ALL COMMUNICATION CONDUITS. REFER TO VDOT R&B STD CF-3 1301.31 (Revision date 2/2016).
5. NO TRAFFIC SIGNAL SHALL BE PLACED INTO OPERATION UNTIL THE TRAFFIC SIGNAL COMMUNICATION REQUIREMENTS ARE COMPLETE AND OPERATIONAL.

SIGNAL NOTES

A. POLES AND FOUNDATIONS

1. MAST ARM LENGTHS ARE TO BE INSTALLED AS SHOWN ON PLAN AND ALL MAST ARMS ARE TO BE FIELD DRILLED ONLY. MAST ARM LENGTH IS SHOWN NEXT TO EACH MAST ARM IN THE PLAN VIEW.
2. SIGNAL POLES SHALL BE IN ACCORDANCE WITH VDOT ST'D. MP-3.
3. SIGNAL MAST ARM POLE SUPPORTS SHALL BE AS DETAILED ON STRUCTURAL PLANS (SEE SHEET NOS. 59 & 60).
4. ALL PEDESTAL POLES, ST'D PF-2, FOR PEDESTRIAN EQUIPMENT, SHALL BE 12 FT.

B. CONTROLLER AND FOUNDATION

1. THE CONTROLLER CABINET FOUNDATION SHALL BE AS DETAILED ON THE STRUCTURAL DRAWINGS (SEE SHEET NO. 67). THE CONTROLLER CABINET FOUNDATION SHALL HAVE A SEPARATE 2" CONDUIT (M) TIED INTO THE SERVICE METER EQUIPMENT.
2. THE CONTRACTOR SHALL BE RESPONSIBLE FOR MAINTAINING POWER TO THE CONTROLLER AT ALL TIMES. THE CONTRACTOR IS RESPONSIBLE FOR ANY COSTS RELATED TO MAINTAINING POWER TO THE TRAFFIC SIGNAL.
3. THE FINAL SIGNAL TIMING PLAN INCLUDES EIGHT (8) TIME-OF-DAY TIMING PLANS TO REFLECT CYCLE LENGTHS NECESSARY TO ACCOMMODATE CHANGES IN TRAFFIC PATTERNS FOR WEEKDAYS AND WEEKENDS. THE EIGHT TIMING PLANS CONSIST OF FOUR TIMING PLANS FOR WEEKDAYS (AM, MID, PM, OFF-PEAK) AND FOUR TIMING PLANS FOR WEEKENDS (SATURDAY PEAK, SUNDAY PEAK, WEEKEND BEFORE PEAK, AND WEEKEND AFTER PEAK). THESE TIMING PLANS SHALL BE FIRST SUBMITTED TO THE VDOT PERMITS SECTION. THE PERMIT SECTION WILL THEN NOTIFY THE NRO TRAFFIC SIGNAL OPERATIONS SECTION FOR REVIEW AND APPROVAL NO MORE THAN SIX (6) MONTHS PRIOR TO PROJECT COMPLETION AND NO LESS THAN SIXTY (60) DAYS PRIOR TO THE ACTIVATION OF THE TRAFFIC SIGNAL.

C. TRAFFIC SIGNAL HEADS

1. ALL TRAFFIC SIGNAL HEADS SHALL BE CAST ALUMINUM.
2. ALL SIGNAL HEADS SHALL HAVE POLYCARBONATE BACKPLATES. BACKPLATE HARDWARE SHALL BE STAINLESS STEEL.
3. PEDESTRIAN SIGNAL HEADS SHALL BE INSTALLED IN ACCORDANCE WITH STANDARD SMB-3.
4. PEDESTAL MOUNTED TRAFFIC SIGNAL HEADS SHALL BE MOUNTED IN ACCORDANCE WITH STANDARD SMB-1.
5. PEDESTRIAN PUSHBUTTONS SHALL BE ACCESSIBLE PEDESTRIAN SYSTEM (APS) EQUIPMENT MEETING ALL OF THE REQUIREMENTS OF THE MUTCD, VIRGINIA SUPPLEMENT TO THE MUTCD, ADA, AND THE CONTRACT SPECIAL PROVISIONS. PEDESTRIAN PUSHBUTTONS SHALL BE INSTALLED IN ACCORDANCE WITH PA-2 OR PA-4 AS SPECIFIED AND SHALL BE IN ACCORDANCE WITH MUTCD, ADA, AND VDOT SPECIFICATIONS.

D. DETECTORS

1. 6'X40' LOOP DETECTORS SHALL BE INSTALLED IN ACCORDANCE WITH ST'D. TD-1C AND SHALL BE PLACED 5' IN FRONT OF THE STOP BAR. 6'X6' LOOP DETECTORS SHALL BE INSTALLED IN ACCORDANCE WITH VDOT ST'D TD-1B.
2. 14/1 ENCLOSED CONDUCTOR CABLE LEAD IN REQUIRES A 5/8" SAW CUT.
3. LOOP DETECTOR AMPLIFIERS SHALL BE ONE FOR EACH LOOP EXCEPT THAT WHEN THERE ARE SETS OF 6' X 6' LOOPS, ONLY THE SET FARTHEST FROM THE STOP BAR SHALL HAVE SEPARATE AMPLIFIER UNITS. ALL OTHER 6' X 6' SETS SHALL BE SPLICED IN SERIES.

E. CONDUIT, CONDUCTORS, AND ELECTRICAL

1. THE PROJECT SHALL BE RESPONSIBLE FOR MAINTAINING ELECTRICAL SERVICE TO THE CONTROLLER AT ALL TIMES. THE PROJECT SHALL BE RESPONSIBLE FOR ANY COSTS ASSOCIATED WITH MAINTAINING ELECTRICAL SERVICE TO THE TRAFFIC SIGNAL. THE PROJECT SHALL BE RESPONSIBLE FOR COORDINATING THE LOCATION AND THE INSTALLATION OF THE ELECTRICAL SERVICE FOR THE TRAFFIC SIGNAL WITH THE LOCAL UTILITY COMPANY. THE NOVA SPEC. SE-5 ELECTRICAL SERVICE SHALL BE INSTALLED IN ACCORDANCE WITH STANDARD SE-5 SHOWN ON THE PLAN AND SECTION 238.02(H) OF THE VDOT ROADS AND BRIDGES SPECIFICATIONS. ELECTRICAL SERVICE SHALL BE METERED. DEDICATED CIRCUIT BREAKERS SHALL BE PROVIDED FOR THE EXPRESS LANES RAMP TRAFFIC SIGNAL AND THE ROADWAY LIGHTING.
2. TRAFFIC SIGNAL AND ROADWAY LIGHTING CONDUCTORS MAY BE INSTALLED TOGETHER IN CONDUITS AND JUNCTION BOXES. ROADWAY LIGHTING CONDUCTORS SHALL BE CLEARLY IDENTIFIED AT EACH JUNCTION BOX AND SHALL BE INSTALLED IN NON-METALLIC FLEXIBLE CONDUIT INSIDE EACH MAST ARM POLE FROM THE BASE TO THE ROADWAY LIGHTING LUMINAIRE ARM.
3. JUNCTION BOX COVERS SHALL HAVE THE LETTERS "TRAF" CAST IN THE TOP SURFACE DEPRESSION FOR ALL THE SIGNAL RELATED JUNCTION BOXES CONTAINING CABLE WITH LESS THAN 50 VOLTS. ALL OTHER JUNCTION BOX COVERS SHALL HAVE THE LETTERS "ELEC" CAST IN THE TOP SURFACE DEPRESSION.
4. ALL JUNCTION BOXES SHALL BE INSTALLED IN ACCORDANCE WITH ST'D JB-S2 UNLESS OTHERWISE NOTED. SEE SHEET NO. 91 FOR INSTALLATION OF JUNCTION BOXES ON THE BRIDGE.
5. NO JB-S1, S2, OR S3 SHALL BE INSTALLED IN A PAVED SHOULDER, SIDEWALK, OR MULTI-PURPOSE TRAIL.
6. (S) DENOTES SHIELDED CABLE. (M) DENOTES METAL CONDUIT. (EGC) DENOTES EQUIPMENT GROUNDING CONDUCTOR. (E) DENOTES EXISTING.
7. ALL UNDERGROUND CONDUITS SHALL BE INSTALLED IN ACCORDANCE WITH ST'D. EC1-1.
8. FOR INSTALLATION OF CONDUIT, NO OPEN CUT WILL BE ALLOWED IN ROADWAY SURFACE. SEE SHEET NO. 91 FOR INSTALLATION OF CONDUIT ON THE BRIDGE.
9. ALL EXISTING CONDUIT NOT SHOWN FOR REUSE SHALL BE CAPPED AND ABANDONED.
10. ALL EXISTING WIRING NOT SHOWN FOR REUSE SHALL BE COMPLETELY REMOVED.
11. ALL PULL ROPE SHALL BE RATED AT 1100 LBS.
12. THE TRAFFIC SIGNAL WIRING AND SIGNAL PREEMPTION WIRING SHALL USE SEPARATE CONDUITS AND JUNCTION BOXES.

F. SIGNS AND PAVEMENT MARKINGS

1. ALL MAST ARM MOUNTED SIGNS SHALL BE MOUNTED IN ACCORDANCE WITH ST'D. SMD-2.
2. PAVEMENT MARKINGS SHALL BE MODIFIED TO REFLECT THE MARKINGS SHOWN ON THE PLAN WHEN THE SIGNAL IS INSTALLED.
3. ANY EXISTING PAVEMENT MARKINGS THAT ARE IN CONFLICT WITH PROPOSED PAVEMENT MARKINGS SHALL BE COMPLETELY ERADICATED.
4. LIMITS SHOWN ON PROPOSED MARKING ARE APPROXIMATE AND SHALL BE MODIFIED IN THE FIELD TO ENSURE THAT PROPOSED PAVEMENT MARKINGS CONTINUE UNTIL EXISTING PAVEMENT MARKINGS CAN BE MATCHED.

MOT NOTES

1. ALL TEMPORARY TRAFFIC CONTROL DEVICES SHALL BE INSTALLED PRIOR TO THE START OF CONSTRUCTION AND SHALL BE REMOVED OR RELOCATED AS THE WORK IS COMPLETED OR WORK CONDITIONS CHANGE. THE CONTRACTOR SHALL ENSURE THAT ALL TEMPORARY TRAFFIC CONTROL DEVICES REMAIN IN PLACE AND OPERATING AT ALL TIMES.
2. THE CONTRACTOR SHALL VERIFY PROPOSED GEOMETRICS PRIOR TO INSTALLING SIGNAL EQUIPMENT.
3. ALL JUNCTION BOXES SHALL BE INSTALLED AT FINAL GRADE.
4. THE CONTRACTOR SHALL REPAIR ANY DAMAGE TO EXISTING SIDEWALKS CAUSED BY THE INSTALLATION OF THE SIGNAL EQUIPMENT.
5. ALL EXISTING SIGNS NOT RELOCATED OR REMOVED SHALL REMAIN UNLESS OTHERWISE APPROVED BY THE ENGINEER.
6. THE CONTRACTOR SHALL INSTALL CONDUIT AT SUFFICIENT DEPTH TO AVOID DISTURBANCE DURING ROADWAY CONSTRUCTION. CONDUIT SHALL BE INSTALLED PRIOR TO BEGINNING ROADWAY CONSTRUCTION.
7. NEW TRAFFIC SIGNAL HEADS AND OVERHEAD TRAFFIC SIGNAL SIGNAGE SHALL BE COVERED WITH DURABLE NON-TRANSPARENT COVER UPON INSTALLATION. THE CONTRACTOR SHALL MAINTAIN THE COVERS UNTIL THE NEW TRAFFIC SIGNAL SYSTEM IS OPERATIONAL.
8. THE CONTRACTOR SHALL NOT BLOCK THE VIEW OF EXISTING SIGNAL INDICATIONS DURING INSTALLATION OF THE MAST ARMS.
9. MAINTENANCE AND REPAIR OF THE TRAFFIC SIGNAL AND ANY NECCESARY MODIFICATIONS DURING CONSTRUCTION SHALL BE THE SOLE RESPONSIBILITY OF THE CONTRACTOR.

AFC PLANS

INDEX OF SHEETS

Sheet No.:	Sheet Description:
18(1)	Index of Sheets, General Notes & Legend
18(2)	Summary of Quantities (Not Provided)
18(3)	Traffic Signal Plan - Opitz Blvd. (Rte. 2000) & Telegraph Rd. (Rte. 1781)
18(4)	Traffic Signal Plan - Opitz Blvd. (Rte. 2000) & I-95 Express Lanes Ramp
18(5)	Traffic Signal Plan - Opitz Blvd. (Rte. 2000) & I-95 Express Lanes Ramp

STANDARD TRAFFIC SIGNAL LEGEND

PLAN ITEM	PLAN SYMBOL: PROPOSED	PLAN SYMBOL: EXISTING
Metal Signal Pole & Foundation and Mast Arm (As noted In Signal Pole Legend)		
Pedestal Pole and Foundation (St'd. PF-2)		
Pedestal Pole and Foundation (St'd. PA-3)		
Traffic Signal Head w/ Backplate		
Traffic Signal Head w/o Backplate		
Pedestrian Signal Head		
Pedestrian Pushbutton & Sign	P.B.	P.B.
Traffic Signal Sign Mast Arm or Span Wire Mt'd.		
Traffic Signal Sign Pole Mounted		
CCTV Camera		
Video Detection Camera		
360 Video Detection Camera		
GPS Emergency Vehicle Pre-emption (EVP) Sensor		
w/ Conf. Light		
w/o Conf. Light		
Wireless Radio		
Controller Cabinet & Foundation (Std. CF-3)	C	C
Junction Box (St'd. as noted on plans)	J	J
Signal Luminaire (250 W) and Arm		
Signal Luminaire (400 W) and Arm		
Loop Detector (Size as noted on plans)	6' x 40'	6' x 40'
Video Detection Zone (Size as noted on plans)	VDZ 6' x 40'	VDZ 6' x 40'
Conduit		

LABELS	
Proposed Signal Head	(2)
Existing Signal Head	(2)
Proposed Pedestrian Signal Head	(P2)
Existing Pedestrian Signal Head	(P2)
Signal Pole or Controller	(A)
Cable and Conduit	(A)
Construction Notes	(1)
Signal Phasing	Ø2
Sign	S-1

COMMONWEALTH OF VIRGINIA
DANA TRONE OZLIN
Lic. No. 045607
PROFESSIONAL ENGINEER

Dana T Ozlin
2022.07.18 10:41:38 -04'00'

Whitman, Requardt & Associates
Richmond, Virginia
TRAFFIC ENGINEER

REVISED	STATE	STATE: ROUTE	STATE: PROJECT	SHEET NO.
	VA.	95	0095-076-299, C-501	18(1)

DESIGN FEATURES RELATING TO CONSTRUCTION OR TO REGULATION AND CONTROL OF TRAFFIC MAY BE SUBJECT TO CHANGE AS DEEMED NECESSARY BY THE DEPARTMENT

TRAFFIC CONTROL DEVICE PLANS

TRAFFIC SIGNAL
INDEX OF SHEETS, GENERAL NOTES & LEGEND(S)
PRINCE WILLIAM COUNTY

PROJECT	SHEET NO.
0095-076-299	18(1)

Cell Revised 12/11/12

PROJECT MANAGER Bimpal Shah, P.E. (703) 259-2362 (NOVA District) _____
SURVEYED BY, DATE H&B Surveying and Mapping, LLC (804) 330-3781, 03/09/2021
DESIGN BY Whitman, Requardt & Associates, LLP (804) 272-8700 _____.
SUBSURFACE UTILITY BY, DATE Accumark, Inc. (804) 550-7740, 07/07/2021.

COMMONWEALTH OF VIRGINIA
DANA TRONE OZLIN
Lic. No. 045607
PROFESSIONAL ENGINEER

Dana T Ozlin
2022.07.18 10:42:17 -04'00'

Whitman, Requardt & Associates
Richmond, Virginia
TRAFFIC ENGINEER

REVISED	STATE	STATE ROUTE	STATE PROJECT	SHEET NO.
	VA.	95	0095-076-299,C-501	18(2)

DESIGN FEATURES RELATING TO CONSTRUCTION OR TO REGULATION AND CONTROL OF TRAFFIC MAY BE SUBJECT TO CHANGE AS DEEMED NECESSARY BY THE DEPARTMENT

SIGN DETAIL
1:25

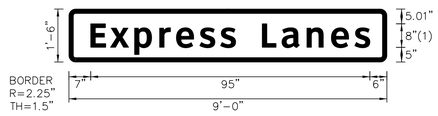

SIGN NUMBER	S-3
WIDTH x HGHT.	9'-0" x 1'-6"
BORDER WIDTH	1.5"
CORNER RADIUS	2.25"
MOUNTING	Overhead
BACKGROUND	TYPE: Reflective
	COLOR: Green
LEGEND\BORDER	TYPE: Reflective
	COLOR: White\White

SYMBOL	ROT	X	Y	WID	HT

FONT:
(1) ClearviewHwy-5-W

Panel Style: D3-V1.ssi
Dimensions are in inches.tenths

Letter locations are panel edge to lower left corner

LETTER POSITIONS (X)

E	x	p	r	o	s	s		L	a	n	e	s										LENGTH	SERIES\SIZE
7.4	14.1	22.3	30.8	38.5	44.5	51.5	59.8	65.7	72.4	80.9	88.1	97.1										94.8	ClearviewHwy-5-W 96.5

SIGN DETAIL
1:25

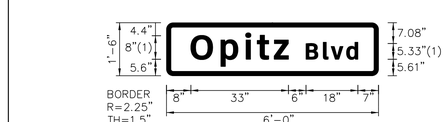

SIGN NUMBER	S-6
WIDTH x HGHT.	6'-0" x 1'-6"
BORDER WIDTH	1.5"
CORNER RADIUS	2.25"
MOUNTING	Overhead
BACKGROUND	TYPE: Reflective
	COLOR: Blue
LEGEND\BORDER	TYPE: Reflective
	COLOR: White\White

SYMBOL	ROT	X	Y	WID	HT

FONT:
(1) ClearviewHwy-5-W

Panel Style: D3-V1.ssi
Dimensions are in inches.tenths

Letter locations are panel edge to lower left corner

LETTER POSITIONS (X)

O	p	t	i	c																		LENGTH	SERIES\SIZE
8.2	16.5	25.8	30.8	38.6																		33.2	ClearviewHwy-5-W 96.5
B	l	v	d																				ClearviewHwy-5-W
47.4	53.3	62.9	67.1																			17.8	5.34.3

SIGN DETAIL
1:25

SIGN NUMBER	S-1
WIDTH x HGHT.	6'-6" x 4'-0"
BORDER WIDTH	1.25"
CORNER RADIUS	6"
MOUNTING	Overhead
BACKGROUND	TYPE: Reflective
	COLOR: Green
LEGEND\BORDER	TYPE: Reflective
	COLOR: White

SYMBOL	ROT	X	Y	WID	HT
NEXT	0	63	18	24	24
	0	372	6	63	9

Panel Style: Guide Sign.ssi
Dimensions are in inches.tenths

Letter locations are panel edge to lower left corner

LETTER POSITIONS (X)

N	O	R	T	H																		LENGTH	SERIES\SIZE
36.4	45.3	52.8	59.7	68.1																		30.7	D 10.8

AFC PLANS

TRAFFIC CONTROL DEVICE PLANS
TRAFFIC SIGNAL
SIGN FIGURE DETAILS

PRINCE WILLIAM COUNTY

PROJECT	SHEET NO.
0095-076-299	18(2)

Cell Revised 12/11/12

PROJECT MANAGER Rimpal Shah, P.E. (703) 259-2362 (NOVA District)
SURVEYED BY, DATE H&B Surveying and Mapping, LLC (804) 330-3781, 03/09/2021
DESIGN BY Whitman, Requardt, & Associates, LLP (804) 272-8700
SUBSURFACE UTILITY BY, DATE Accumark, Inc. (804) 550-7740, 07/07/2021

REVISED	STATE	STATE ROUTE	STATE PROJECT	SHEET NO.
	VA.	95	0095-076-299,C-501	18(3)

DANA TRONE OZLIN
Lic. No. 045607
COMMONWEALTH OF VIRGINIA
PROFESSIONAL ENGINEER

Dana T Ozlin
2022.07.18 10:42:36 -04'00'

Whitman, Requardt & Associates
Richmond, Virginia
TRAFFIC ENGINEER

DESIGN FEATURES RELATING TO CONSTRUCTION OR TO REGULATION AND CONTROL OF TRAFFIC MAY BE SUBJECT TO CHANGE AS DEEMED NECESSARY BY THE DEPARTMENT

INITIAL TIMING CHART								
PHASE	1	2	3	4	5	6	7	8
MOVEMENT	OPITZ BLVD WB LEFT	OPITZ BLVD EB	TELEGRAPH ROAD SB	TELEGRAPH ROAD NB	OPITZ BLVD EB LEFT	OPITZ BLVD WB	FFU	FFU
PHASE ON	X	X	X	X	X	X		
PHASE OFF							X	X
INTERVAL	PHASE TIMINGS							
MIN GR	5.0	20.0	7.0	7.0	8.0	20.0	-	-
AMBER	3.6	5.1	3.9	4.0	4.1	4.4	-	-
RED	3.3	1.0	4.1	4.0	3.1	1.0	-	-
MAX	15.0	45.0	40.0	30.0	20.0	45.0	-	-
PASSAGE	3.0	4.0	3.0	3.0	3.0	4.0	-	-
MIN GAP	0.0	0.0	0.0	0.0	0.0	0.0	-	-
PED WALK	-	-	8.0	-	-	7.0	-	-
PED FDW	-	-	33.0	-	-	18.0	-	-
LPI	-	-	-	-	-	-	-	-
MODE	NON LOCK	MIN RECALL	NON LOCK	NON LOCK	NON LOCK	MIN RECALL	NON LOCK	NON LOCK

Signal Pole & Controller Legend

(ALL DIMENSIONS ARE TO CENTER OF POLE)

- (A) PEDESTAL POLE (PF-2),12' 73.2' RT. of Rte. 2000 Constr. ℄ Sta.60+65
- (B) PEDESTAL POLE (PF-2),12' 73.2' LT. of Rte. 2000 Constr. ℄ Sta.60+36
- (C) PEDESTAL POLE (PF-2),12' 84.8' LT. of Rte. 2000 Constr. ℄ Sta.60+52
- (D) PEDESTAL POLE (PF-2),12' 83.4' LT. of Rte. 2000 Constr. ℄ Sta.61+43

SIGNAL NOTES

1. REMOVE EXISTING JUNCTION BOX.
2. INSTALL VDOT ST'D JB-S3 JUNCTION BOX.
3. SPLICE EXISTING 14/2c LOOP DETECTOR CABLE TO PROPOSED 14/1 LOOPWIRE CABLE.
4. SEE SHEET 18(5) FOR INSTALLATION OF POWER AND COMMUNICATION SERVICE EQUIPMENT AND CONDUIT.
5. INSTALL WIRELESS RADIO ON SIGNAL POLE.

Color Sequence Chart

SIGNAL	PHASES 1	2	3	4	5	6	COMBINATIONS 1-5	1-6	2-5	2-6	FLASH
1	→G						→G	→G			→R
2		G							G	G	Y
3			G								R
3A			G →G								R
3B			→G								→R
4				G							R
4A				G →G							R
5					→G		→G		→G		→R
6						G		G		G	Y
P3 (APS)	DW	DW	W	DW	DW	DW	DW	DW	DW	DW	BLANK
P6 (APS)	DW	DW	DW	DW	DW	W	DW	W	DW	W	BLANK

Empty box denotes RED indication. The solid red arrow shall occur at the end of the solid yellow arrow for the Flashing Yellow Arrow (FYA) signal. All FYA signals shall have the red interval.

APS Audible Indications Chart

PUSHBUTTON (QUADRANT)	SPEECH PB INFORMATION MESSAGE	AUDIBLE WALK INDICATION
P6 (NE), P6 (NW)	WAIT TO CROSS TELEGRAPH AT OPITZ	PERCUSSIVE TONE
P3 (NW), P3 (SW)	WAIT TO CROSS OPITZ AT TELEGRAPH	PERCUSSIVE TONE

Phasing Diagram

Existing Signals

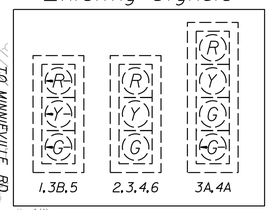

Existing Signs

Proposed Signals

Proposed Signs

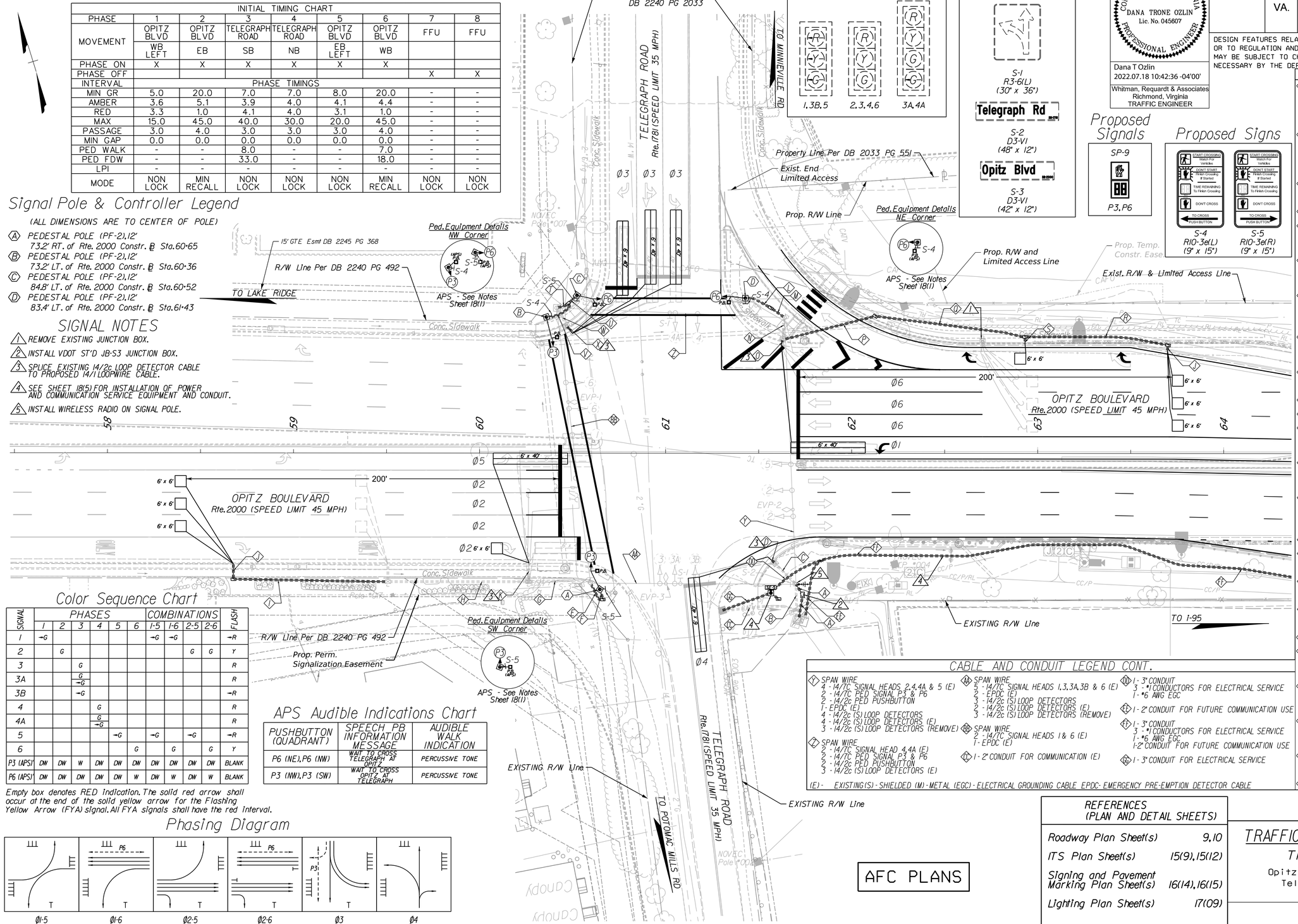

CABLE AND CONDUIT LEGEND

- (A) 2 - 2" CONDUIT
  4 - 14/7C PED SIGNAL P3 & P6
  4 - 14/2c PED PUSHBUTTON
  7 - 14/2c (S) LOOP DETECTORS
  1 - CAT 5E (S) NETWORK CABLE
  1 - #6 AWG (EGC)
- (B) 1 - 3" CONDUIT (E)
  9 - 14/7C SIGNAL HEADS 1,2,3,3A,3B,4,4A,5&6 (E)
  7 - 14/2c (S) LOOP DETECTORS (E)
  7 - 14/2c (S) LOOP DETECTORS (REMOVE)
  3 - EMERGENCY VEHICLE PRE-EMPTION CABLE (E)
  1 - #6 AWG (EGC) (E)
- (C) 1 - 2" CONDUIT (E)
  1 - 14/2c (S) LOOP DETECTORS (E)
  1 - #6 AWG (EGC) (E)
- (D) 1 - 1" CONDUIT (M)
- (E) 1 - 2" CONDUIT
  1 - 14/7C PED SIGNALS P3
  1 - 14/2c PED PUSHBUTTONS
  1 - #6 AWG EGC
- (F) 1 - 3" CONDUIT
  1 - 14/7C PED SIGNALS P3
  1 - 14/2c PED PUSHBUTTONS
  1 - #6 AWG EGC
- (G) 1 - 2" CONDUIT (E)
  3 - 14/2c (S) LOOP DETECTORS (REMOVE)
  3 - 14/2c (S) LOOP DETECTORS
  2 - 14/2c (S) LOOP DETECTORS (E)
  1 - #6 AWG (EGC) (E)
- (H) 1 - 2" CONDUIT (E)
  3 - 14/2c (S) LOOP DETECTORS (REMOVE)
  3 - 14/2c (S) LOOP DETECTORS
  1 - #6 AWG (EGC) (E)
- (J) 1 - 2" CONDUIT
  3 - 14/2c (S) LOOP DETECTORS
  1 - #6 AWG (EGC)
- (K) 3 - 1" CONDUIT (M)
- (L) 1 - 3" CONDUIT
  1 - 14/7C PED SIGNALS P6
  1 - 14/2c PED PUSHBUTTONS
  1 - #6 AWG EGC
- (M) 1 - 2" CONDUIT
  1 - 14/7C PED SIGNALS P6
  1 - 14/2c PED PUSHBUTTONS
  1 - #6 AWG EGC
- (N) 1 - 2" CONDUIT (E)
  1 - 14/2c (S) LOOP DETECTORS (E)
  4 - 14/2c (S) LOOP DETECTORS
  3 - 14/2c (S) LOOP DETECTORS (REMOVE)
  1 - #6 AWG (EGC) (E)
- (O) 1 - 1" CONDUIT (M)
- (P) 1 - 2" BORED CONDUIT
  4 - 14/2c (S) LOOP DETECTORS
  1 - #6 AWG (EGC)
- (Q) 1 - 2" CONDUIT
  4 - 14/2c (S) LOOP DETECTORS
  1 - #6 AWG (EGC)
- (R) 1 - 2" CONDUIT
  3 - 14/2c (S) LOOP DETECTORS
  1 - #6 AWG (EGC)
- (S) 1 - 1" CONDUIT (M)
- (T) 1 - 2" CONDUIT
  2 - 14/7C PED SIGNAL P3 & P6
  2 - 14/2c PED PUSHBUTTON
  1 - #6 AWG (EGC)
- (U) 1 - 3" CONDUIT
  1 - 14/7C PED SIGNAL P6
  1 - 14/2c PED PUSHBUTTON
  1 - #6 AWG (EGC)
- (V) 1 - 3" CONDUIT
  1 - 14/7C PED SIGNAL P3
  1 - 14/2c PED PUSHBUTTONS
  1 - #6 AWG (EGC)
- (W) 1 - 2" CONDUIT (E)
  3 - 14/2c (S) LOOP DETECTORS (E)
  1 - #6 AWG (EGC) (E)
- (X) 3 - 1" CONDUITS (M)

CABLE AND CONDUIT LEGEND CONT.

- (Y) SPAN WIRE
  4 - 14/7C SIGNAL HEADS 2,4,4A & 5 (E)
  2 - 14/7C PED SIGNAL P3 & P6
  2 - 14/2c PED PUSHBUTTON
  1 - EPDC (E)
  4 - 14/2c (S) LOOP DETECTORS
  4 - 14/2c (S) LOOP DETECTORS (E)
  3 - 14/2c (S) LOOP DETECTORS (REMOVE)
- (Z) SPAN WIRE
  2 - 14/7C SIGNAL HEAD 4,4A (E)
  2 - 14/7C PED SIGNAL P3 & P6
  2 - 14/2c PED PUSHBUTTON
  3 - 14/2c (S) LOOP DETECTORS (E)
- (AA) SPAN WIRE
  5 - 14/7C SIGNAL HEADS 1,3,3A,3B & 6 (E)
  2 - EPDC (E)
  3 - 14/2c (S) LOOP DETECTORS
  2 - 14/2c (S) LOOP DETECTORS (E)
  3 - 14/2c (S) LOOP DETECTORS (REMOVE)
- (BB) SPAN WIRE
  2 - 14/7C SIGNAL HEADS 1 & 6 (E)
  1 - EPDC (E)
- (CC) 1 - 2" CONDUIT FOR COMMUNICATION (E)
- (DD) 1 - 3" CONDUIT
  3 - #1 CONDUCTORS FOR ELECTRICAL SERVICE
  1 - #6 AWG EGC
- (EE) 1 - 2" CONDUIT FOR FUTURE COMMUNICATION USE
- (FF) 1 - 3" CONDUIT
  3 - #1 CONDUCTORS FOR ELECTRICAL SERVICE
  1 - #6 AWG EGC
  1-2" CONDUIT FOR FUTURE COMMUNICATION USE
- (GG) 1 - 3" CONDUIT FOR ELECTRICAL SERVICE

(E) - EXISTING (S) - SHIELDED (M) - METAL (EGC) - ELECTRICAL GROUNDING CABLE EPDC - EMERGENCY PRE-EMPTION DETECTOR CABLE

REFERENCES (PLAN AND DETAIL SHEETS)	
Roadway Plan Sheet(s)	9,10
ITS Plan Sheet(s)	15(9),15(12)
Signing and Pavement Marking Plan Sheet(s)	16(14),16(15)
Lighting Plan Sheet(s)	17(09)

AFC PLANS

SCALE 0 25' 50'

TRAFFIC CONTROL DEVICE PLANS

TRAFFIC SIGNAL PLAN

Opitz Boulevard (Rte. 2000) &
Telegraph Road (Rte. 1781)
PRINCE WILLIAM COUNTY

PROJECT	SHEET NO.
0095-076-299	18(3)

Cell Revised 12/11/12

PROJECT MANAGER Rimpal Shah, P.E. (703) 259-2362 (NOVA District) _____
SURVEYED BY, DATE H&B Surveying and Mapping, LLC (804) 330-3781, 03/09/2021
DESIGN BY Whitman, Requardt & Associates, LLP (804) 272-8700 _____
SUBSURFACE UTILITY BY, DATE Accumark, Inc. (804) 550-7740, 07/07/2021.

REVISED	STATE	STATE ROUTE	STATE PROJECT	SHEET NO.
	VA.	95	0095-076-299,C-501	18(4)

COMMONWEALTH OF VIRGINIA
DANA TRONE OZLIN
Lic. No. 045607
PROFESSIONAL ENGINEER

Dana T Ozlin
2022.07.18 10:43:04 -04'00'

Whitman, Requardt & Associates
Richmond, Virginia
TRAFFIC ENGINEER

DESIGN FEATURES RELATING TO CONSTRUCTION OR TO REGULATION AND CONTROL OF TRAFFIC MAY BE SUBJECT TO CHANGE AS DEEMED NECESSARY BY THE DEPARTMENT

Proposed Signals

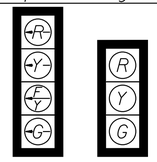

1 2,4,6
ALL SIGNAL HEADS SHALL BE 12" LED.
ALL SIGNALS SHALL HAVE HIGH VISIBILITY SIGNAL BACKPLATES.

Proposed Signs

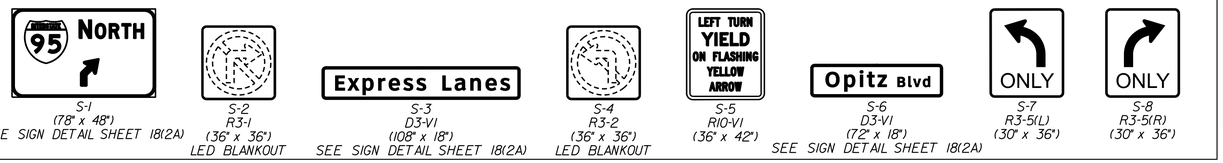

S-1 (78" x 48") SEE SIGN DETAIL SHEET 18(2A)
S-2 R3-1 (36" x 36") LED BLANKOUT
S-3 D3-V1 (108" x 18") SEE SIGN DETAIL SHEET 18(2A)
S-4 R3-2 (36" x 36") LED BLANKOUT
S-5 R10-V1 (36" x 42")
S-6 D3-V1 (72" x 18") SEE SIGN DETAIL SHEET 18(2A)
S-7 R3-5(L) (30" x 36")
S-8 R3-5(R) (30" x 36")

Signal Pole & Controller Legend

(ALL DIMENSIONS ARE TO CENTER OF POLE)

Ⓐ MAST ARM POLE, TYPE E1 MODIFIED (MP-3)
63.7' RT. of Rte. 2000 Constr. Ⓑ Sta. 67+85
60' Arm 270° Angle to Rte. 2000 Constr. Ⓑ
Signal Placement: 24.0', 36.0', 48.0'
Emergency Pre-emption Placement: 30.0'
Video Camera Placement: 40.0'
Wireless Radio Placement: Pole
CCTV Camera: Pole
Sign Placement: 5.0', 12.0', 18.0'
12' Luminaire Arm 270° Angle to Rte. 2000 Constr. Ⓑ
160 Watt LED Luminaire with 30' Mounting Height

Ⓑ MAST ARM POLE, TYPE F MODIFIED (MP-3)
43.8' LT. of Rte. 2000 Constr. Ⓑ Sta. 67+06
49' Arm 00° Angle to Rte. 2000 Constr. Ⓑ
Signal Placement: 25.0', 37.0'
Sign Placement: 11.0', 220', 34.0'
49' Arm 90° Angle to Rte. 2000 Constr. Ⓑ
Signal Placement: 17.5', 31.5', 43.5'
Sign Placement: 9.5', 40.5', 47.5'
Emergency Pre-emption Placement: 25.5'
Video Camera Placement: 22.5'
360 Video Camera Placement: 36.5'
12' Luminaire Arm 90° Angle to Rte. 2000 Constr. Ⓑ
160 Watt LED Luminaire with 30' Mounting Height

Ⓒ CONTROLLER CABINET & FOUNDATION
69.5' RT. of Rte. 2000 Constr. Ⓑ Sta. 67+63
Cabinet door hinge located on right side of pad.

Ⓓ PEDESTAL POLE 6'
67.5' RT. of Rte. 2000 Constr. Ⓑ Sta. 67+69
Install Electrical Service, SE-5 Modified (Safety Switch) on Pedestal Pole.

SIGNAL NOTES

1. INSTALL STD. SE-5. REPLACE THE METER BASE A WITH FUSED SAFETY DISCONNECT SWITCH FUSED AT 40A. PROVIDE A BREAKER BOX WITH (1) 40A 1 POLE BREAKER FOR THE TRAFFIC SIGNAL AND (2) 20A 1 POLE BREAKERS FOR THE SIGNAL LUMINAIRES. THE TRAFFIC SIGNAL BREAKER AND SIGNAL LUMINAIRE BREAKERS SHALL BE CONNECTED TO DIFFERENT PHASES (LEGS) OF THE 120/240V FEED FROM THE SE-5 LOCATED AT TELEGRAPH ROAD.
2. INSTALL BRIDGE MOUNTED JUNCTION BOX FOR SIGNAL CABLES. SEE SHEET NO. 9I FOR DETAILS.
3. INSTALL BRIDGE MOUNTED JUNCTION BOX FOR PRE-EMPTION CABLES. SEE SHEET NO. 9I FOR DETAILS.
4. INSTALL BRIDGE MOUNTED JUNCTION BOX FOR POWER CABLES. SEE SHEET NO. 9I FOR DETAILS.
5. INSTALL BRIDGE MOUNTED JUNCTION BOX FOR FUTURE COMMUNICATION. SEE SHEET NO. 9I FOR DETAILS.
6. EXPRESS LANES GATE MONITORING VIDEO DETECTION CAMERA. SEE SHEET NO. 15(9).
7. LUMINAIRE TO INCLUDE PHOTOCELL. REFER TO LIGHTING PLANS FOR DETAILS OF SIGNAL MAST ARM POLE MOUNTED LUMINAIRES. SEE SHEET NO. 17(2A).
8. INSTALL CCTV CAMERA (RISE SERIES 4220HD MODEL)

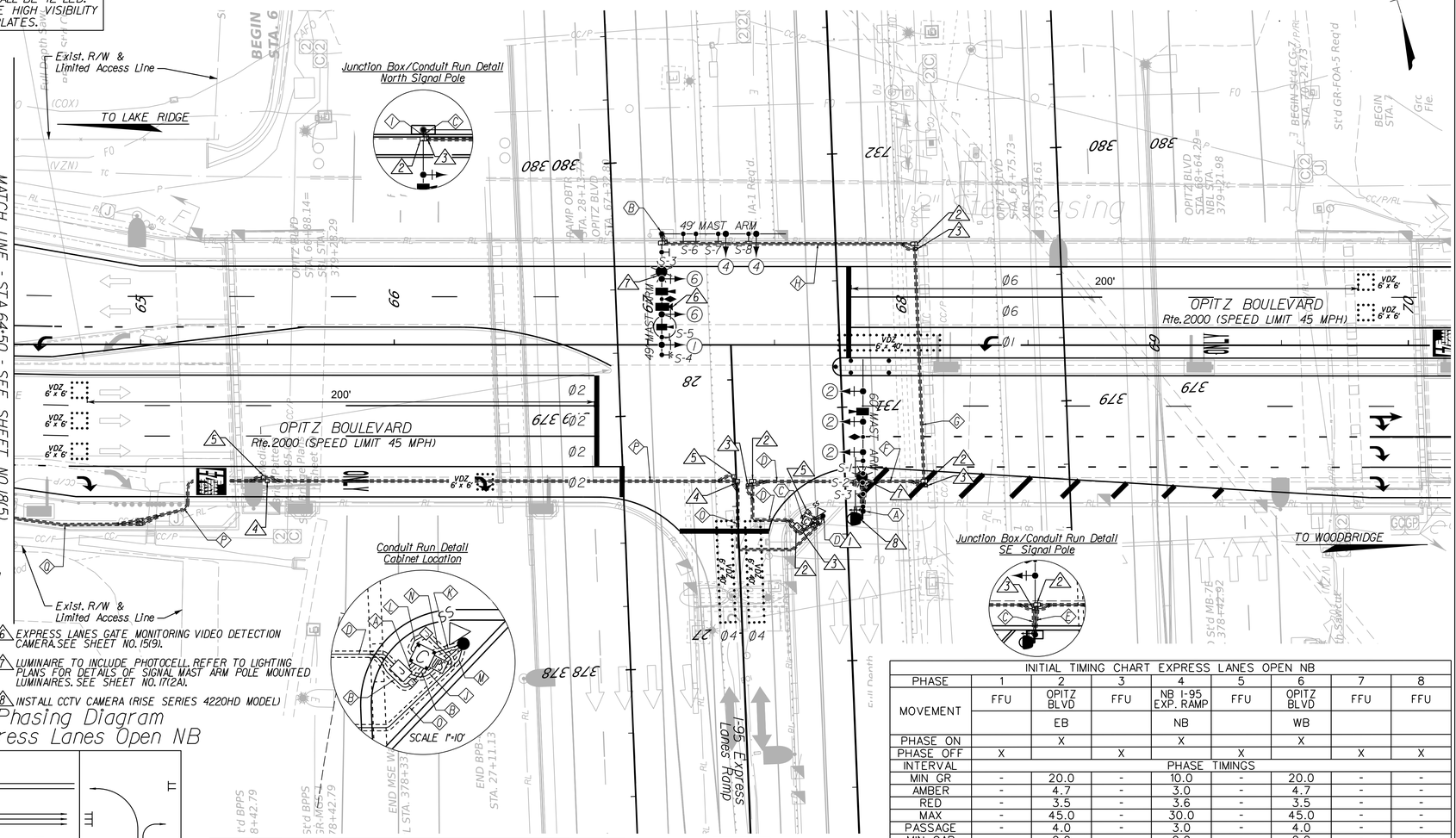

Phasing Diagram Express Lanes Open SB

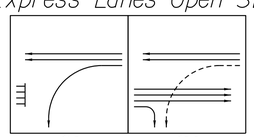

Color Sequence Chart Express Lanes Open SB

SIGNAL	PHASES 1	2	6	COMB. 1-6	2-6	FLASH
1	→G	→FYA	→FYA	→G	→FYA	→FYA
2		G			G	Y
4						R
6			G	G	G	Y

Empty box denotes RED indication. The solid red arrow shall occur at the end of the solid yellow arrow for the Flashing Yellow Arrow (FYA) signal. All FYA signals shall have the red interval.

Phasing Diagram Express Lanes Open NB

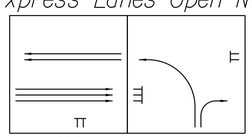

Color Sequence Chart Express Lanes Open NB

SIGNAL	PHASES 2	4	6	COMB. 2-6	4	FLASH
1						R
2	G			G		Y
4		G			G	R
6			G	G		Y

Empty box denotes RED indication.

INITIAL TIMING CHART EXPRESS LANES OPEN SB

PHASE	1	2	3	4	5	6	7	8
MOVEMENT	OPITZ BLVD WB LEFT	OPITZ BLVD EB	FFU	FFU	FFU	OPITZ BLVD WB	FFU	FFU
PHASE ON	X	X				X		
PHASE OFF			X	X	X		X	X
INTERVAL	PHASE TIMINGS							
MIN GR	8.0	20.0	-	-	-	20.0	-	-
AMBER	4.7	4.7	-	-	-	4.7	-	-
RED	3.5	3.5	-	-	-	3.5	-	-
MAX	15.0	45.0	-	-	-	45.0	-	-
PASSAGE	3.0	4.0	-	-	-	4.0	-	-
MIN GAP	0.0	0.0	-	-	-	0.0	-	-
PED WALK	-	-	-	-	-	-	-	-
PED FDW	-	-	-	-	-	-	-	-
LPI	-	-	-	-	-	-	-	-
MODE	NON LOCK	MIN RECALL	NON LOCK	NON LOCK	NON LOCK	MIN RECALL	NON LOCK	NON LOCK

INITIAL TIMING CHART EXPRESS LANES OPEN NB

PHASE	1	2	3	4	5	6	7	8
MOVEMENT	FFU	OPITZ BLVD EB	FFU	NB I-95 EXP. RAMP NB	FFU	OPITZ BLVD WB	FFU	FFU
PHASE ON		X		X		X		
PHASE OFF	X		X		X		X	X
INTERVAL	PHASE TIMINGS							
MIN GR	-	20.0	-	10.0	-	20.0	-	-
AMBER	-	4.7	-	3.0	-	4.7	-	-
RED	-	3.5	-	3.6	-	3.5	-	-
MAX	-	45.0	-	30.0	-	45.0	-	-
PASSAGE	-	4.0	-	3.0	-	4.0	-	-
MIN GAP	-	0.0	-	0.0	-	0.0	-	-
PED WALK	-	-	-	-	-	-	-	-
PED FDW	-	-	-	-	-	-	-	-
LPI	-	-	-	-	-	-	-	-
MODE	NON LOCK	MIN RECALL	NON LOCK	NON LOCK	NON LOCK	MIN RECALL	NON LOCK	NON LOCK

CABLE AND CONDUIT LEGEND

Ⓐ 2 - 3" CONDUIT
4 - 14/7C SIGNAL HEADS 1, 2, 4, & 6
2 - 14/4C BLANKOUT SIGN CABLE
3 - VIDEO DETECTION CAMERA CABLE
1 - CAT 5E (S) NETWORK CABLE
1 - CAT 6 (S) OUTDOOR NETWORK CABLE (CCTV)
1 - #6 AWG EGC

Ⓑ 1 - 3" CONDUIT
2 - EMERGENCY VEHICLE PRE-EMPTION CABLE

Ⓒ 1 - 2" CONDUIT
2 - EMERGENCY VEHICLE PRE-EMPTION CABLE

Ⓓ 2 - 3" CONDUIT
4 - 14/7C SIGNAL HEADS 1, 2, 4, & 6
2 - 14/4C BLANKOUT SIGN CABLE
3 - VIDEO DETECTION CAMERA CABLE
1 - CAT 5E (S) NETWORK CABLE
1 - CAT 6 (S) OUTDOOR NETWORK CABLE (CCTV)
2 - 10/3C FOR LUMINAIRE
1 - #6 AWG EGC
1 - 3" CONDUIT
2 - EMERGENCY VEHICLE PRE-EMPTION CABLE

Ⓔ 1 - 3" CONDUIT
1 - 14/7C SIGNAL HEADS 2
1 - 14/4C BLANKOUT SIGN CABLE
1 - VIDEO DETECTION CAMERA CABLE
1 - CAT 5E (S) NETWORK CABLE
1 - CAT 6 (S) OUTDOOR NETWORK CABLE (CCTV)
1 - 10/3C FOR LUMINAIRE
1 - #6 AWG EGC

Ⓕ 1 - 3" CONDUIT
3 - 14/7C SIGNAL HEADS 1, 4, & 6
1 - 14/4C BLANKOUT SIGN CABLE
2 - VIDEO DETECTION CAMERA CABLE
1 - 10/3C FOR LUMINAIRE
1 - #6 AWG EGC
1 - 2" CONDUIT
1 - EMERGENCY VEHICLE PRE-EMPTION CABLE

Ⓖ 1 - 3" CONDUIT
3 - 14/7C SIGNAL HEADS 1, 4, & 6
1 - 14/4C BLANKOUT SIGN CABLE
2 - VIDEO DETECTION CAMERA CABLE
1 - 10/3C FOR LUMINAIRE
1 - #6 AWG EGC
1 - 4" CONDUIT
1 - EMERGENCY VEHICLE PRE-EMPTION CABLE

Ⓗ 1 - 3" CONDUIT
3 - 14/7C SIGNAL HEADS 1, 4, & 6
1 - 14/4C BLANKOUT SIGN CABLE
2 - VIDEO DETECTION CAMERA CABLE
1 - 10/3C FOR LUMINAIRE
1 - #6 AWG EGC
1 - 4" CONDUIT
1 - EMERGENCY VEHICLE PRE-EMPTION CABLE

Ⓘ 1 - 3" CONDUIT
3 - 14/7C SIGNAL HEADS 1, 4, & 6
1 - 14/4C BLANKOUT SIGN CABLE
2 - VIDEO DETECTION CAMERA CABLE
1 - 10/3C FOR LUMINAIRE
1 - #6 AWG EGC

Ⓙ 1 - 3" CONDUIT
2 - 10/3C FOR LUMINAIRE
1 - #6 AWG EGC

Ⓚ 1 - 3" CONDUIT
3 - #6 CONDUCTORS FOR ELECTRICAL SERVICE
1 - #6 AWG EGC

Ⓛ 1 - 1" CONDUIT FOR COMMUNICATIONS

Ⓜ 1 - 3" CONDUIT
3 - #1 CONDUCTORS FOR ELECTRICAL SERVICE
1 - #6 AWG EGC

Ⓝ 1 - 3" CONDUIT FOR FUTURE COMMUNICATION USE

Ⓞ 1 - 3" CONDUIT
3 - #1 CONDUCTORS FOR ELECTRICAL SERVICE
1 - #6 AWG EGC
1 - 3" CONDUIT FOR FUTURE COMMUNICATION USE

Ⓟ 1 - 4" CONDUIT
3 - #1 CONDUCTORS FOR ELECTRICAL SERVICE
1 - #6 AWG EGC
1 - 4" CONDUIT FOR FUTURE COMMUNICATION USE

Ⓠ 1 - 3" CONDUIT
3 - #1 CONDUCTORS FOR ELECTRICAL SERVICE
1 - #6 AWG EGC
1 - 2" CONDUIT FOR FUTURE COMMUNICATION USE

USE PVC CONDUIT FOR TRENCH RUNS AND EXPOSED HORIZONTAL RUNS ON BRIDGES AND RIGID GALVANIZED STEEL (RGS) CONDUIT FOR OTHER EXPOSED RUNS, SEE SHEET NO. 9I FOR DETAILS.
(EGC) - ELECTRICAL GROUNDING CABLE

AFC PLANS

REFERENCES (PLAN AND DETAIL SHEETS)	
Roadway Plan Sheet(s)	9
ITS Plan Sheet(s)	15(9)
Signing and Pavement Marking Plan Sheet(s)	16(15)
Lighting Plan Sheet(s)	17(08)

TRAFFIC CONTROL DEVICE PLANS

TRAFFIC SIGNAL PLAN

Opitz Blvd. (Rte. 2000) & I-95 Express Lanes Ramp
PRINCE WILLIAM COUNTY

SCALE 0 25' 50'

PROJECT	SHEET NO.
0095-076-299	18(4)

PROJECT MANAGER Rimpal Shah, P.E. (703) 259-2362 (NOVA District) _____
SURVEYED BY, DATE H&B Surveying and Mapping, LLC (804) 330-3781, 03/09/2021
DESIGN BY Whitman, Requardt & Associates, LLP (804) 272-8700 _____.
SUBSURFACE UTILITY BY, DATE Accumark, Inc. (804) 550-7740, 07/07/2021.

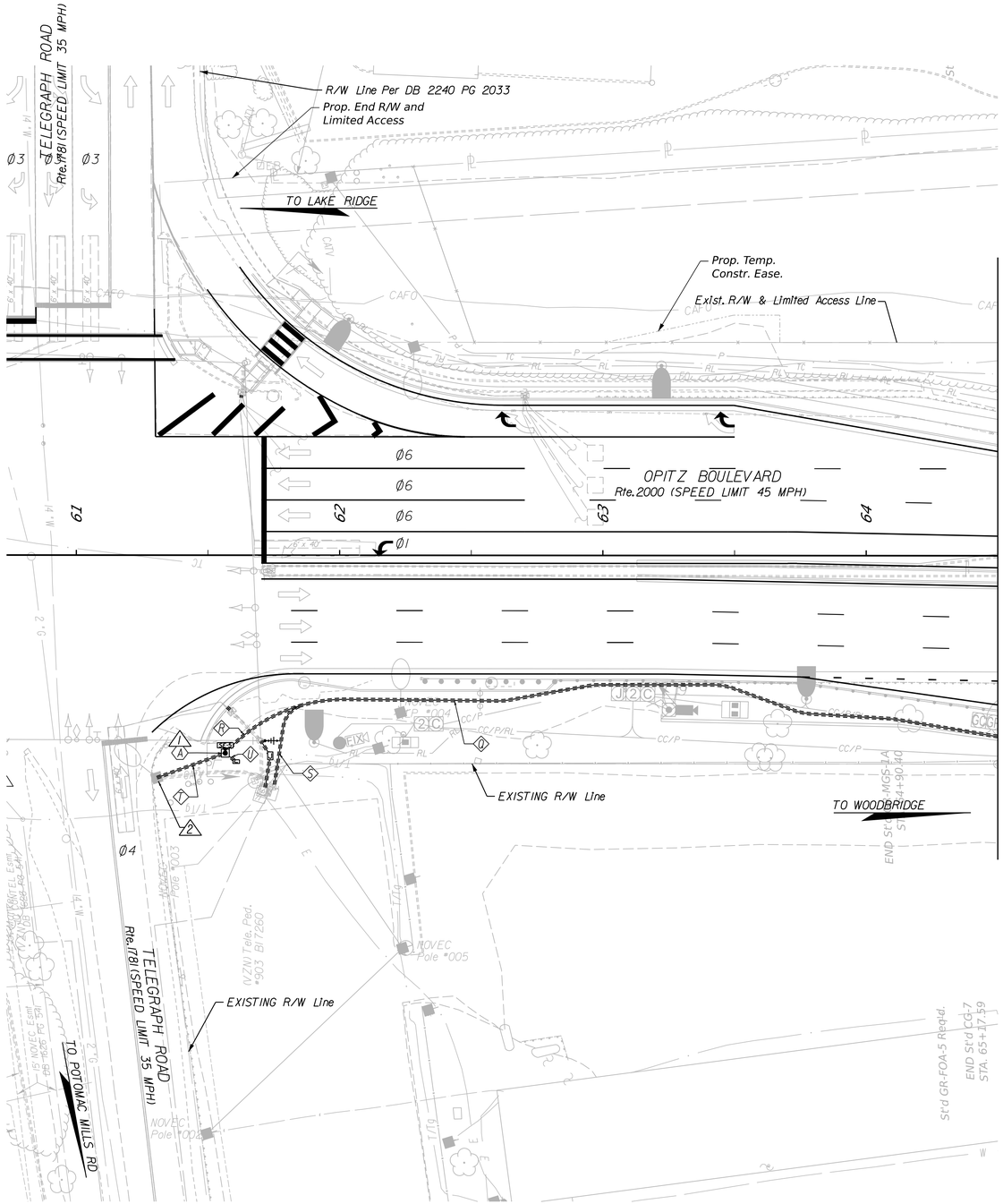

COMMONWEALTH OF VIRGINIA
DANA TRONE OZLIN
Lic. No. 045607
PROFESSIONAL ENGINEER

Dana T Ozlin
2022.07.18 11:14:37 -04'00'
Whitman, Requardt & Associates
Richmond, Virginia
TRAFFIC ENGINEER

REVISED	STATE	STATE		SHEET NO.
		ROUTE	PROJECT	
	VA.	95	0095-076-299,C-501	18(5)

DESIGN FEATURES RELATING TO CONSTRUCTION OR TO REGULATION AND CONTROL OF TRAFFIC MAY BE SUBJECT TO CHANGE AS DEEMED NECESSARY BY THE DEPARTMENT

AFC PLANS

CABLE AND CONDUIT LEGEND

Ⓓ 1 - 3" CONDUIT
3 - #1 CONDUCTORS FOR ELECTRICAL SERVICE
1 - #6 AWG EGC
1 - 2" CONDUIT FOR FUTURE COMMUNICATION USE

Ⓡ 1 - 3" CONDUIT
3 - #1 CONDUCTORS FOR ELECTRICAL SERVICE
1 - #6 AWG EGC

Ⓢ 1 - 2" CONDUIT FOR FUTURE COMMUNICATION USE

Ⓘ 1 - 3" CONDUIT FOR ELECTRICAL SERVICE

Ⓘ1 1 - 1" CONDUIT
1 - #6 CABLES FOR ELECTRICAL SERVICE GROUNDING

Signal Pole & Controller Legend

(ALL DIMENSIONS ARE TO CENTER OF POLE)

Ⓐ ELECTRICAL SERVICE (SE-5)
75.1' RT. of Rte.2000 Constr. ℄ Sta.61+56

SIGNAL NOTES

⚠1 INSTALL VDOT Std SE-5 ELECTRICAL SERVICE (METERED). CONTRACTOR TO PROVIDE A FUSED SAFETY DISCONNECT SWITCH FUSED AT 40A.

⚠2 CONTRACTOR TO COORDINATE ELECTRICAL SERVICE AND COMMUNICATIONS SERVICE INSTALLATION TO POWER POLE #457 OF 3 003.

REFERENCES (PLAN AND DETAIL SHEETS)	
Roadway Plan Sheet(s)	9,10
ITS Plan Sheet(s)	15(9),15(12)
Signing and Pavement Marking Plan Sheet(s)	16(14),16(15)
Lighting Plan Sheet(s)	17(08),17(09)

SCALE
0 25' 50'

TRAFFIC CONTROL DEVICE PLANS

TRAFFIC SIGNAL PLAN

Optiz Blvd. (Rte. 2000) &
I-95 Express Lanes Ramp
PRINCE WILLIAM COUNTY

PROJECT	SHEET NO.
0095-076-299	18(5)

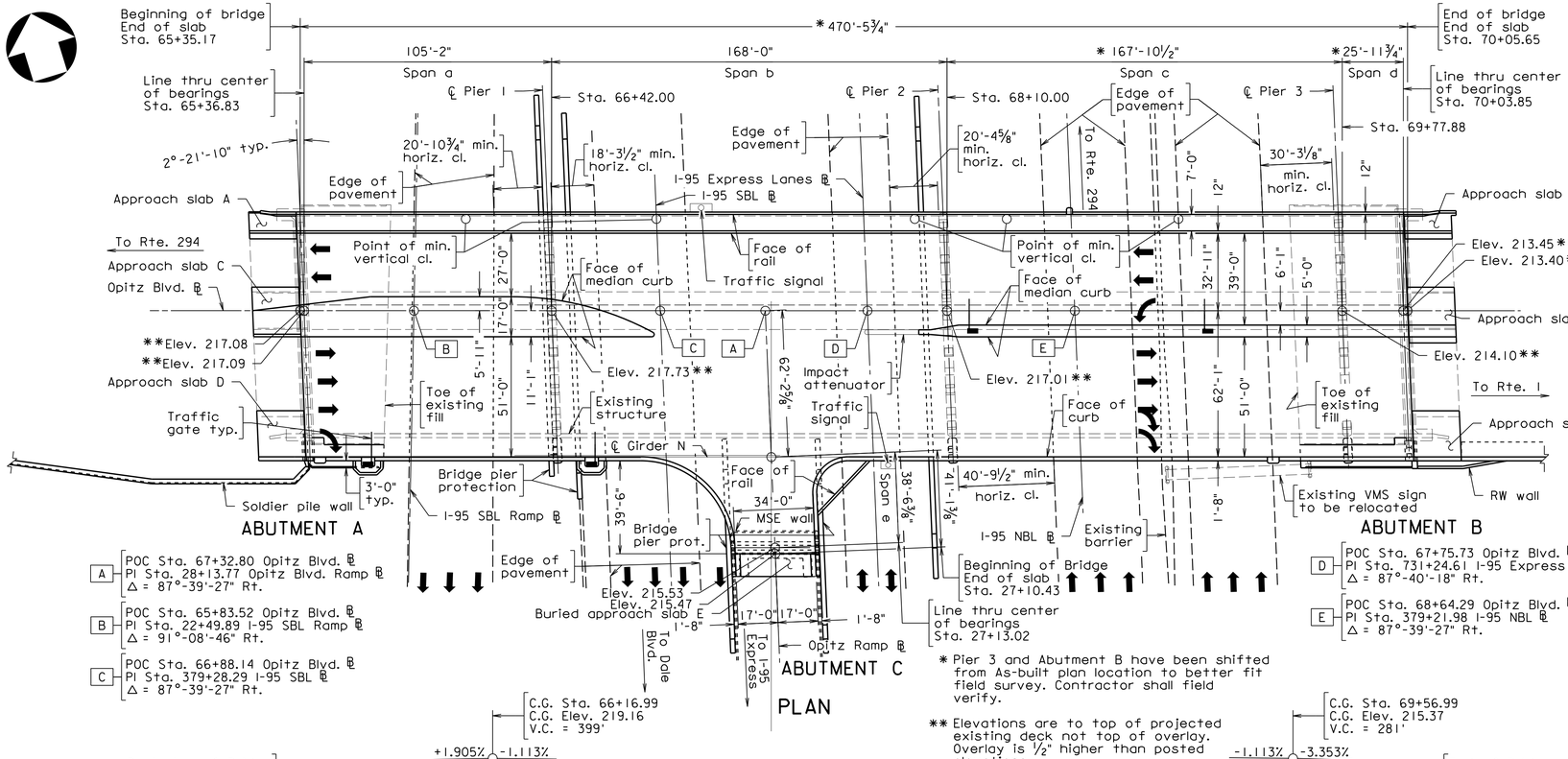

Scale: 1" = 30', unless otherwise noted.

257-38A_001.dgn

VDOT PROJECT MANAGER	
MEGAPROJECTS DIRECTOR NORTHERN VIRGINIA DISTRICT	
COMMONWEALTH OF VIRGINIA JEREMY SCHLUSSEL Lic. No. 033974 PROFESSIONAL ENGINEER	
WHITMAN REQUARDT & ASSOCIATES RICHMOND, VA STRUCTURAL ENGINEER	

PLANS BY:	Whitman Requardt & Associates, LLP
COORDINATED:	Brian Morrison
SUPERVISED:	Jeremy Schlussel
DESIGNED:	Michelle R. Defreese
DRAWN:	Charlie R. Reagle
CHECKED:	Gary T. Shelor

No.	Description	Date
	REVISIONS	
	For Table of Revisions, see Sheet 3.	

STATE	FEDERAL AID ROUTE	FEDERAL AID PROJECT	STATE ROUTE	STATE PROJECT	SHEET NO.
VA.	—	BR-095-2(546)	95	0095-076-299, B688	1
Federal Structure No. 000000000014334			FHWA Construction and Scour Code:		X771-SN
Federal Stewardship and Oversight Code:		NFO		UPC No. 116663	

DESIGN EXCEPTION(S):

None.

GENERAL NOTES:

The original approved sheet, including original signatures, is filed in the VDOT Central Office. Any misuse of electronic files, including scanned signatures is illegal. Violators will be prosecuted to the full extent of the applicable laws.

Width: Opitz Blvd. - 7'-0" sidewalk, 12" rail, 39'-0" WBL roadway, variable median, 51'-0" EBL roadway. Overall width 103'-0" face-to-face of rail/curb. Includes 9'-10" of widening on right of EBL traffic.
Ramp - Varies face-to-face of curbs

Span layout: Opitz Blvd. - 105'-2", 168'-0" - 167'-10½" continuous, and one 25'-11¾" composite steel plate girder spans
Ramp - 38'-6⅜" composite steel plate girder span

Capacity: HS20-44 loading and alternate military loading (original); HL-93 loading (new)

Specifications:

Construction: Virginia Department of Transportation Road and Bridge Specifications, 2020.

Design: AASHTO Standard Specifications for Highway Bridges, 16th Edition, 1996; 1997 and 1998 Interim Specifications; and VDOT Modifications (existing bridge elements).

AASHTO LRFD Bridge Design Specifications, 8th Edition, 2017; and VDOT Modifications (New bridge elements).

AASHTO Standard Specifications for Structural Supports for Highway Signs, Luminaires, and Traffic Signals, 6th Edition with 2020 Interims.

Standards: Virginia Department of Transportation Road and Bridge Standards, 2016; including all current revisions.

These plans are incomplete unless accompanied by the Supplemental Specifications and Special Provisions included in the contract documents.

Design loading includes 20 psf allowance for construction tolerances and construction methods for new deck, beams and substructure.

Design loading includes 15 psf allowance for future wearing surface for new deck, beams and substructure.

Stay-in-place forms to be supported by existing girders shall have their corregations filled with foam inserts.

All structural steel, including bearings, shall be ASTM A709 Grade 50W and shall be painted unless otherwise noted.

Span e, the cantilever supports of traffic blisters, and portions of the plate girders and splices in Span b are considered fracture critical members. The Contractor shall fabricate these components in accordance with the AWS Clause on FCM in the AWS Bridge Welding Code, D1.5. Refer to detail sheets for the designation of fracture critical members.

General notes continued on sheet 2.

VDOT

COMMONWEALTH OF VIRGINIA
DEPARTMENT OF TRANSPORTATION

PROPOSED WIDENING ON OPITZ BLVD OVER I-95, I-95 EXPRESS LANES PRINCE WILLIAM CO. PROJ. 0095-076-299, B688

Recommended for Approval: _____ Date
95 Express Lanes LLC Project Manager

Approved: _____ Date
Chief Engineer

257-38A

Date: July 8, 2022

© 2022, Commonwealth of Virginia

STATE	FEDERAL AID		STATE		SHEET NO.
	ROUTE	PROJECT	ROUTE	PROJECT	
VA.	—	BR-095-2(546)	95	0095-076-299, B688	1a

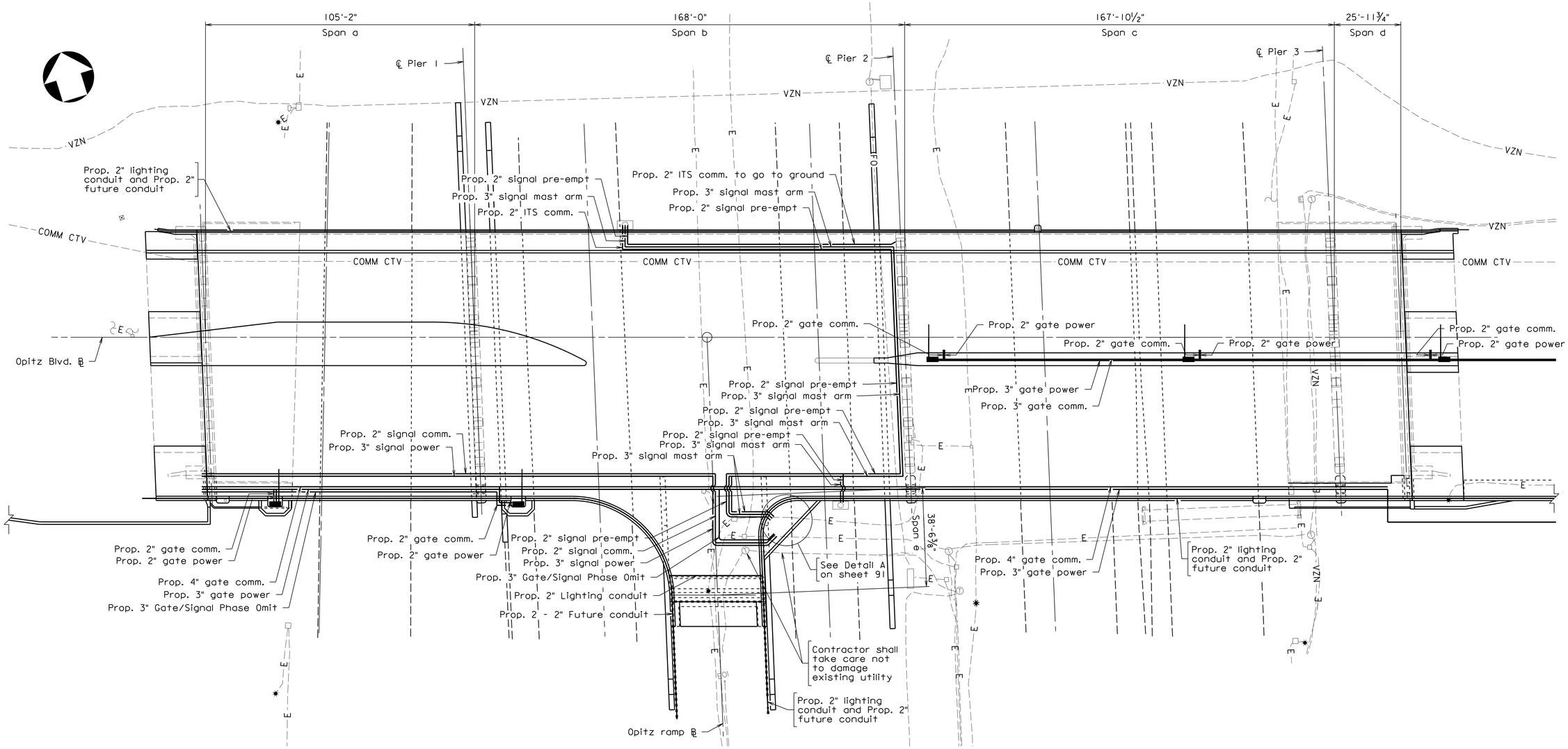

UTILITY PLAN

257-38A_001a.dgn

Not to scale

© 2022, Commonwealth of Virginia

COMMONWEALTH OF VIRGINIA
JEREMY SCHLUSSEL
Lic. No. 033974
PROFESSIONAL ENGINEER

Jeremy Schlussel
2022.07.08 17:59:45 -04'00'

WHITMAN REQUARDT & ASSOCIATES
RICHMOND, VA
STRUCTURAL ENGINEER

No.	Description	Date
	Revisions	

COMMONWEALTH OF VIRGINIA
DEPARTMENT OF TRANSPORTATION

STRUCTURE AND BRIDGE DIVISION

EXISTING AND PROPOSED UTILITY PLAN

Designed: MRD	Date	Plan No.	Sheet No.
Drawn: MRD	July 2022	257-38A	1a of 125
Checked: DTS			

INDEX OF SHEETS

Sheet No.	Description		Description		Description
1	Title sheet; Plans, Developed Sections, Design Exceptions and General Notes	51	Dead Load Deflections and Slab Elevations Span d	95a	Bridge Lighting System BPF-6 2 of 2
		52	Dead Load Deflections and Slab Elevations Span e	96	Bridge Lighting System BPB-4A
1a	Existing and Proposed Utility Plan	53	Cross Frame Details 1 of 2	97	Traffic Gate Conduit System
2	Index of Sheets and General Notes Continued	53a	Cross Frame Details 2 of 2	97a	Median Traffic Gate Conduit System
3	Estimated Quantities	54	Diaphragm and Girder Connection Details	98	Reinforcing Steel Schedule - Superstructure
4	Substructure Layout	55	Girder Connection Details 1 of 3	99	Reinforcing Steel Schedule - Abutment A
5	Sequence of Construction 1 of 2	56	Girder Connection Details 2 of 3	100	Reinforcing Steel Schedule - Abutment B
6	Sequence of Construction 2 of 2	57	Girder Connection Details 3 of 3	101	Reinforcing Steel Schedule - Pier 1
7	Slope Protection Details	58	Girder Splice Details	101a	Reinforcing Steel Schedule - Pier 2
8	Abutment BackFill Details	59	Traffic Signal Support - North	102	Reinforcing Steel Schedule - Pier 3
9	Abutment A Removal	60	Traffic Signal Support - South	103	Reinforcing Steel Schedule - Abutment C and Moment Slab
10	Abutment A Plan	61	Deck Overhang Support Details	104	Engineering Geology
11	Abutment A Elevation	61a	Sign Structure Support Details	105	Engineering Geology
12	Abutment A Footing Plan and Pile Layout	62	Deck Slab and Approach Slab Limits of Removal	106	Engineering Geology
13	Abutment A Typical Sections	63	Deck Plan - Span a	107	Engineering Geology
14	Abutment A Wingwalls	64	Deck Plan - Span b and e	108	Engineering Geology
15	Abutment B Removal	65	Deck Plan - Spans c and d	109	Approach Slab - A
16	Abutment B Plan	66	Deck Details 1 of 3	110	Approach Slab - B
17	Abutment B Elevation	67	Deck Details 2 of 3	111	Approach Slab - C At Abutment A
18	Abutment B Footing Plan and Pile Layout	68	Deck Details 3 of 3	111a	Approach Slab - C At Abutment B
19	Abutment B Typical Sections	69	Deck Slab Median Curb and Barrier Layout Plan	112	Approach Slab - D
20	Abutment B Wingwalls	69a	Deck Drainage Details	113	Buried Approach Slab - E
21	Abutment C Plan	70	Deck Slab Elevations Span a thru Span d	114	Moment Slab Plan and Typical Section
22	Abutment C Elevation	70a	Existing Deck Slab Elevations Girder L	115	RW Wall Plan and Elevation
23	Abutment C Footing Plan and Pile Layout	71	Deck Slab Elevations Span e and Pouring Sequence	116	RW Wall Sections
24	Abutment C Footing Plan	72	Median Traffic Gate Blister Details	117	Soldier Pile Wall Plan and Notes
25	Abutment C Section and Details	73	Elastomeric Expansion Dam	118	Soldier Pile Wall Elevation
26	Abutment C Wingwalls	74	Class I Adhesive Based Joint Sealer	119	Soldier Pile Wall Typical Section and Details
27	Pier 1 Widening Details	75	Class II Adhesive Based Joint Sealer	120	Soldier Pile Wall and Lagging Details
28	Pier 2 Widening Details	76	Pedestrian Fence BPF-6	120a	Soldier Pile Wall Fence Details
29	Pier 3 Widening Details	77	42" CPSR Railing with Architectural Treatment	121	MSE Wall Layout 1 of 2
30	Miscellaneous Pier Details	78	CPSR Rail Connections and Notes	122	MSE Wall Layout 2 of 2
31	Beam Seat Modification Details	79	42" CPSR Terminal Wall with Architectural Treatment CPSRT-1-AT	123	MSE Wall Elevations Wall #1
32	Anchor Bolt Replacement and Jacking and Blocking Details	79a	42" CPSR Terminal Wall with CPSRT-4	124	MSE Wall Elevations Wall #3
33	Bearing Details 1 of 3	80	Architectural treatment for CPSR Railing	125	MSE Wall Elevations Wall #2 and MSE Wall Sections
34	Bearing Details 2 of 3	81	Cast-in-Place Concrete Median Barrier (F-Shape) BMB-3A		
35	Bearing Details 3 of 3	82	Cast-in-Place Concrete Parapet (F-Shape) BPB-3A		
36	Transverse Section 1 of 2	82a	Cast-in-Place Concrete Parapet Abutment C (F-Shape) BPB-3A		
37	Transverse Section 2 of 2	82b	Cast-in-Place Concrete Parapet Median (F-Shape) BPB-3A		
38	Framing Plan 1 of 2	83	42" BPB Terminal Wall BPBT-4A		
39	Framing Plan 2 of 2	84	42" Pedestrian Railing BPR-1		
40	Girder Details Span a	85	42" Cast-in-Place Concrete Parapet (F-Shape) BPB-4		
41	Girder Details Spans b and c	86	Pier Protection System 54" High 1 of 4		
42	Girder Details Span d	87	Pier Protection System 54" High 2 of 4		
43	Girder Details Span e	88	Pier Protection System 54" High 3 of 4		
44	Camber Diagram Span a	89	Pier Protection System 54" High 4 of 4		
45	Camber Diagram Spans b and c	90	Pier Protection System 54" High		
46	Camber Diagram Span d	91	Bridge Conduit Plan		
47	Camber Diagram Span e	92	Communication Lines Conduit System 1 of 2		
48	Dead Load Deflections and Slab Elevations Span a	93	Communication Lines Conduit System 2 of 2		
49	Dead Load Deflections and Slab Elevations Spans b and c 1 of 2	94	Bridge Lighting System BPB-3A		
50	Dead Load Deflections and Slab Elevations Spans b and c 2 of 2	95	Bridge Lighting System BPF-6 1 of 2		

STATE	FEDERAL AID		STATE		SHEET NO.
	ROUTE	PROJECT	ROUTE	PROJECT	
VA.	—	BR-095-2(546)	95	0095-076-299, B688	2

GENERAL NOTES CONTINUED:

Finish paint color shall be brown, AMS-STD-595-20059

Zone coating of beams for 9'-0" from end of beam including bearings and end crossframes and diaphragms, exterior fascia and underside of bottom flange of Girder A and existing steel areas disturbed by traffic signal support installation, connector angle installation and area of lateral bracing stiffener removal shall be in accordance with Section 411.05 (c5) of the Specifications.

Concrete in superstructure including rails, parapets, terminal walls and medians shall be Low Shrinkage Class A4 Modified (Lightweight, 120 pcf) in accordance with Section 217.12(b); in substructure, Class A3.

Concrete surface color coating for proposed exposed pier columns and caps shall be light beige, similar to federal standard color AMS-STD-595-37769.

Concrete surface color coating for CPSR rail shall be multicolored natural stone colors (consisting of browns, greens, grays and tans). Median curb shall be stamped red brick pattern (brick paver type with a basket weave pattern). Work associated with architectural finishes, concrete form liners, stamped concrete patterns and color stain coating shall be in accordance with Prince William County Contract Special Provisions. Contractor shall submit proposed form liner patterns and color stain schemes for approval prior to construction.

All reinforcing steel shall be deformed and shall conform to ASTM A615, Grade 60 except for steels noted as Corrosion Resistant Reinforcing (CRR) which shall conform to Section 223 of the Specifications. All reinforcing bar dimensions on the detailed drawings are to centers of bars except where otherwise noted and are subject to fabrication and construction tolerances.

CRR steels shall conform to one or more of the three Classes listed in Section 223 of the Specifications. The Class(es) of CRR steel(s) required on this project is/are noted on plan sheets and in the reinforcing steel schedule. CRR Steel, Class I may be substituted for Class II and/or Class III.

HP piles shall be ASTM A709 Grade 50 steel. All piles shall be driven to the required nominal axial resistance or refusal. Piles which are refused prior to achieving listed minimum tip elevation shall be reviewed by the Geotechnical Engineer for acceptance or a replacement pile. For axial resistance requirements for the abutments and piers, see Pile Data Tables. Nominal axial resistance of production piles shall be based on established production pile driving criteria derived from the Dynamic Pile Testing results of designated test pile/piles.

Virginia Structure No. of existing bridge is 6156. Plan No. is 257-38.

The Bridge Date Plate shall be installed in accordance with VDOT's Road and Bridge Standards and obtained from the District Structure and Bridge Office. The existing date plate shall be removed, cleaned, and reinstalled in the new structure as directed by the Engineer.

The existing structure is designated a Type B structure in accordance with Sec. 411.

B.M.: VDOT Disk #076-2058 set in concrete flush with the ground and Elev. 256.35.
VDOT Disk #076-2059 set in concrete flush with the ground and Elev. 242.16.

Contractor shall sheet/shore as necessary for structure excavation.

Datum shift for this location based on the average of differences between the existing plan elevations and the survey elevations of the top of deck is -0.83 feet. Span length for Spans c and d were adjusted by average difference between existing plan dimensions and the survey. Contractor shall verify existing bridge elevations and notify the Engineer prior to proceeding with work.

Contractor shall verify geometry prior to fabrication or execution of associated work. Any discrepancies between these plans and field conditions shall be brought to the attention of the Engineer prior to proceeding with work.

The Contractor shall take care not to damage the portion of the existing bridge structure to remain, and if damaged shall repair the damage as directed by the Engineer at no additional cost.

Contractor shall survey the top of existing girders A, B, E-H and L after the deck has been removed and Girders M and N prior to the deck being poured for setting bolsters.

The Contractor shall submit a demolition plan for approval.

The Contractor shall take care not to damage the existing fiber optic junction box and conduit near the proposed MSE wall at Abutment C and bridge pier protection at Pier 2.

257-38A_002.dgn

COMMONWEALTH OF VIRGINIA
JEREMY SCHLUSSEL
Lic. No. 033974
PROFESSIONAL ENGINEER

Jeremy Schlussel
2022.07.08 17:59:15 -04'00'

WHITMAN REQUARDT & ASSOCIATES
RICHMOND, VA
STRUCTURAL ENGINEER

© 2022, Commonwealth of Virginia

No.	Description	Date
	Revisions	

COMMONWEALTH OF VIRGINIA
DEPARTMENT OF TRANSPORTATION

STRUCTURE AND BRIDGE DIVISION

INDEX OF SHEETS
AND
GENERAL NOTES CONTINUED

Designed: MRD	Date	Plan No.	Sheet No.
Drawn: MRD	July 2022	257-38A	2 of 125
Checked: JWC			

STATE	FEDERAL AID		STATE		SHEET NO.
	ROUTE	PROJECT	ROUTE	PROJECT	
VA.	—	BR-095-2(546)	95	0095-076-299, B688	3

ESTIMATED QUANTITIES - SUBSTRUCTURE ONLY

		Concrete Class A3 CY	Reinforcing Steel LB	Corrosion Resistant Reinf. Steel, Class I LB	Backwall Recon-struction LF	Backwall Recon-struction HES LF	NS Reconstruct Bridge Seat EA	Steel Piles 10" LF	Dynamic pile test EA	Driving Test for 10" Steel Pile LF	Concrete Substructure Surface Repair * SY	Embedded Galvanic Anodes * EA	Crack Repair Type B * LF	Concrete Parapet 32" (lightweight) LF ⊗	Pedestrian Rail, Ltwt. BPF-6 LF ⊗	Struct. Excav. CY ⊗	Select Backfill (Abutment Zone) TON	Concrete Slab Slope Protec. 4" SY ⊗	Geocomposite Wall Drain SY	Pipe Underdrain 6" LF	Pier Protection System 54" LF	Concrete Surface Color Coating SY
Abutment A	Neat	9.0	—	1,760	53	42	5	—	—	—	6	48	82	—	17	4.0	157	41	9	25	—	—
	Footing	5.0	620	—	—	—	—	173	1	77	—	—	—	—	—	22.0	—	—	—	—	—	—
Pier 1	Neat	15.1	—	3,290	—	—	10	—	—	—	35	280	50	—	—	—	—	—	—	—	326	359
	Footing	9.8	1,440	600	—	—	—	209	1	62	—	—	—	—	—	46.0	—	—	—	—	—	—
Pier 2	Neat	14.4	—	4,040	—	—	5	—	—	—	3	24	18	—	—	—	—	—	—	—	205	359
	Footing	18.9	1,720	600	—	—	—	366	1	54	—	—	—	—	—	73.0	—	—	—	—	—	—
Pier 3	Neat	15.3	—	4,000	—	—	10	—	—	—	9	72	4	—	—	—	—	—	—	—		365
	Footing	9.8	1,440	600	—	—	—	183	1	57	—	—	—	—	—	72.0	—	—	—	—	—	—
Abutment B	Neat	9.9	—	3,820	58	38	5	—	—	—	8	64	107	—	17	4.0	157	61	9	25	—	—
	Footing	4.7	590	—	—	—	—	158	1	72	—	—	—	—	—	18.0	—	—	—	—	—	—
Abutment C	Neat	31.3	4,000	—	—	—	—	—	—	—	—	—	—	20	—	—	373	—	39	140	182	—
	Footing	41.4	4,650	—	—	—	—	842	1	85	—	—	—	—	—	48.9	—	—	—	—	—	—
Total		185.0	14,460	18,710	111	80	35	1,931	6	407	61	488	261	20	34	288	687	102	57	190	713	1,083

⊗ Denotes items to be paid for on the basis of plan quantities in accordance with current Road and Bridge Specifications.

LUMP SUM BID ITEMS

Mobilization	LS
Construction Surveying	LS
Remove Portion of Existing Structure 6156	LS
Material Disposal	LS
Environmental and Worker Protection	LS
Zone Coating	LS
Disposal of Material	LS
Environmental Protection and Health and Safety	LS
Bridge Lighting System - B688	LS
Bridge Conduit System - B688	LS
NBIS Access Under Bridge	LS
Architectural Treatment	LS
Temporary Shoring	LS

ESTIMATED QUANTITIES - SUPERSTRUCTURE ONLY

Item	Units	Quantity
Adhesive Based Joint Sealer Class I	LF	212
Bridge Deck Grooving	SY	5,193
Concrete Class A4 Approach Slab	CY	122
Concrete Low Shrinkage Class A4 Modified Lightweight	CY	740
Corrosion Resistant Reinforcing Steel, Class I Approach Slab ⊗	LB	2400
Corrosion Resistant Reinforcing Steel, Class II Approach Slab ⊗	LB	19,300
Corrosion Resistant Reinforcing Steel, Class II ⊗	LB	178,060
Cover Depth Survey ⊗	SY	2,908
Elastomeric Expansion Dam	LF	106
Epoxy Resin Type (Waterproofing)	SY	66
Jacking and Blocking Beams	EA	49
NS Br. Superstr. Wid./Repair Beam End Modifications	EA	10
NS Br. Superstr. Wid./Repair Deck Slab Closure HES	SY	74
NS Bridge Median Barrier	LF	21
NS Furnish VES Latex Modified Concrete (1½" - 3")	CY	323
NS Parapet Concrete parapet, 32" (Lightweight)	LF	941
NS Parapet Concrete parapet, 42" (Lightweight)	LF	20
NS Pedestrian Fence (Lightweight) - BPF-6	LF	471
NS Pedestrian Fence (Lightweight) - BPR-1	LF	76
NS Railing Railing, CPSR (Lightweight)	LF	518
Place VES Latex Modified Concrete	SY	5,266
Reconstruct Expansion Joint HES	LF	59
Remove Asphalt Concrete Overlay	SY	231
Replace Anchor Bolt	EA	108
Replace Bearing	EA	49
Structural Steel Plate Girders ASTM A709 50W **	LB	565,500
Type A Hydrodemolition, ½"	SY	3,105
Type A Milling (1¾")	SY	4,855

ESTIMATED QUANTITIES - RETAINING WALLS ONLY

Item	Units	Quantity
Concrete Low Shrinkage Class A4 Modified	CY	35.6
Corrosion Resistant Reinforcing Steel, Class II	LB	6,870
Retaining Wall RW-3	CY	140
Retaining Wall Excavation - RW-3 Wall	CY	410
NS Parapet Concrete parapet, 32"	LF	130
NS Parapet Concrete parapet, 42"	LF	1,299
NS Retaining Structure Soldier Pile Wall	SF	2,686
Pedestrian Fence, 6'	LF	228
NS Retaining Structure MSE	SF	22,830
NS Lighting	LS	1

** Lump Sum - Weight includes 7,750 lbs. of bearing steel

⊗ Denotes items to be paid for on the basis of plan quantities in accordance with current Road and Bridge Specifications.

Bid Items Bridge Deck Grooving, Furnish VES Latex Modified Concrete and Place VES Latex Modfied Concrete includes the quantity for approach slabs.

Bid Item NS Parapet Concrete Parapet, 42" (Lightweight) and CPSR include the quantity on approach slabs.

Beam End Modifications shall include the equipment, labor and any incidentals necessary to remove beam ends at Pier 3 that impact pier cap wall. Contractor shall provide measurements of beam end clearance to concete pier cap for each beam end at Span c to the Engineer.

Reconstruct Beam Seats shall include the materials, equipment, labor and any incidentals necessary for removal and reconstruction of existing beam seats as noted here-in.

Retaining Structure Soldier Pile Wall shall include the materials, equipment, labor including piles, concrete, reinforcing steel, timber lagging, coping, structure excavation and any incidentals necessary for installation of soldier pile noted herein.

Retaining Structure MSE Wall shall include the design, materials, equipment, labor including MSE panels, moment slab, coping, structure excavation, MSE backfill, and any incidentals necessary for installation of conduits, junction boxes and hangers for ITS. traffic signals and traffic gates on the bridge

Any Type B Patching of existing deck to remain shall be incidental to other items.

* Quantity is subject to change. Contractor shall verify quantity in the field and notify the Engineer of any discrepancies.

Notes:

Architectural Treatment shall include the materials, equipment, labor and any incidentals necessary for architectural treatment and concrete surface color coating noted here-in.

Bridge Conduit System - B688 shall include the materials, equipment, labor and any incidentals necessary for installation of conduits, junction boxes and hangers for ITS. traffic signals and traffic gates and their foundations on the bridge.

Bridge Lighting System - B688 shall include the materials, equipment, labor and any incidentals necessary for installation of conduits and junction boxes for lighting and future lighting on the bridge and retaining walls.

Remove Portion of Existing Structure Number 6156 includes removal of portions of superstructure and portions of abutments and piers as denoted in these plans; including saw cutting and epoxy required for ends of cutoff reinforcing steel.

Quantity for Cover depth survey includes moment slab on RW wall and sidewalk.

Concrete in Backwall Reconstruction HES, Joint Reconstruction HES and Deck Slab Closure HES shall be a high early strength concrete Class A4 and in accordance with Section 412 of the Specifications.

Per VWAPM Section 6G.17, the Contractor shall take extreme care when working within the traveled way of a limited access highway. A shielding system shall be installed over travel way and shoulders to ensure the containment of all dislodged concrete and debris to protect the traveling public from debris under the bridge. The shielding system shall be used during demolition and throughout the whole construction process. It will be required on the full bridge width in addition to the SIP forms during new construction when pouring the deck, forming the parapet, installing the railing and fencing, milling operations, and any other construction activities being performed over active traffic. The secondary shielding system shall be incidental to other items.

Rev. No.	Sheets Revised	Date

TABLE OF REVISIONS

COMMONWEALTH OF VIRGINIA
JEREMY SCHLUSSEL
Lic. No. 033974
PROFESSIONAL ENGINEER

Jeremy Schlussel
2022.07.08 18:00:10 -04'00'

WHITMAN REQUARDT & ASSOCIATES
RICHMOND, VA
STRUCTURAL ENGINEER

No.	Description	Date
	Revisions	

COMMONWEALTH OF VIRGINIA
DEPARTMENT OF TRANSPORTATION

STRUCTURE AND BRIDGE DIVISION

ESTIMATED QUANTITIES

Designed: MRD
Drawn: CRR
Checked: RDS

Date	Plan No.	Sheet No.
July 2022	257-38A	3 of 125

© 2022, Commonwealth of Virginia

257-38A_003.dgn

STATE	FEDERAL AID		STATE		SHEET NO.
	ROUTE	PROJECT	ROUTE	PROJECT	
VA.	—		95	0095-076-299, B688	4

A — POC Sta. 67+32.80 Opitz Blvd. ℄
PI Sta. 28+13.77 Opitz Blvd. Ramp ℄
Δ = 87°-39'-27" Rt.

B — POC Sta. 65+83.52 Opitz Blvd. ℄
PI Sta. 22+49.89 I-95 SBL Ramp ℄
Δ = 91°-08'-46" Rt.

C — POC Sta. 66+88.14 Opitz Blvd. ℄
PI Sta. 379+28.29 I-95 SBL ℄
Δ = 87°-39'-27" Rt.

D — POC Sta. 67+76.21 Opitz Blvd. ℄
PI Sta. 380+94.24 I-95 Express Lanes ℄
Δ = 87°-39'-27" Rt.

E — POC Sta. 68+64.29 Opitz Blvd. ℄
PI Sta. 379+21.98 I-95 NBL ℄
Δ = 87°-39'-27" Rt.

Notes:

This layout is to be used only for the purpose of locating fill slopes and footings. For details not shown see abutment and pier details.

For details of MSE walls, see sheets 121 thru 125.

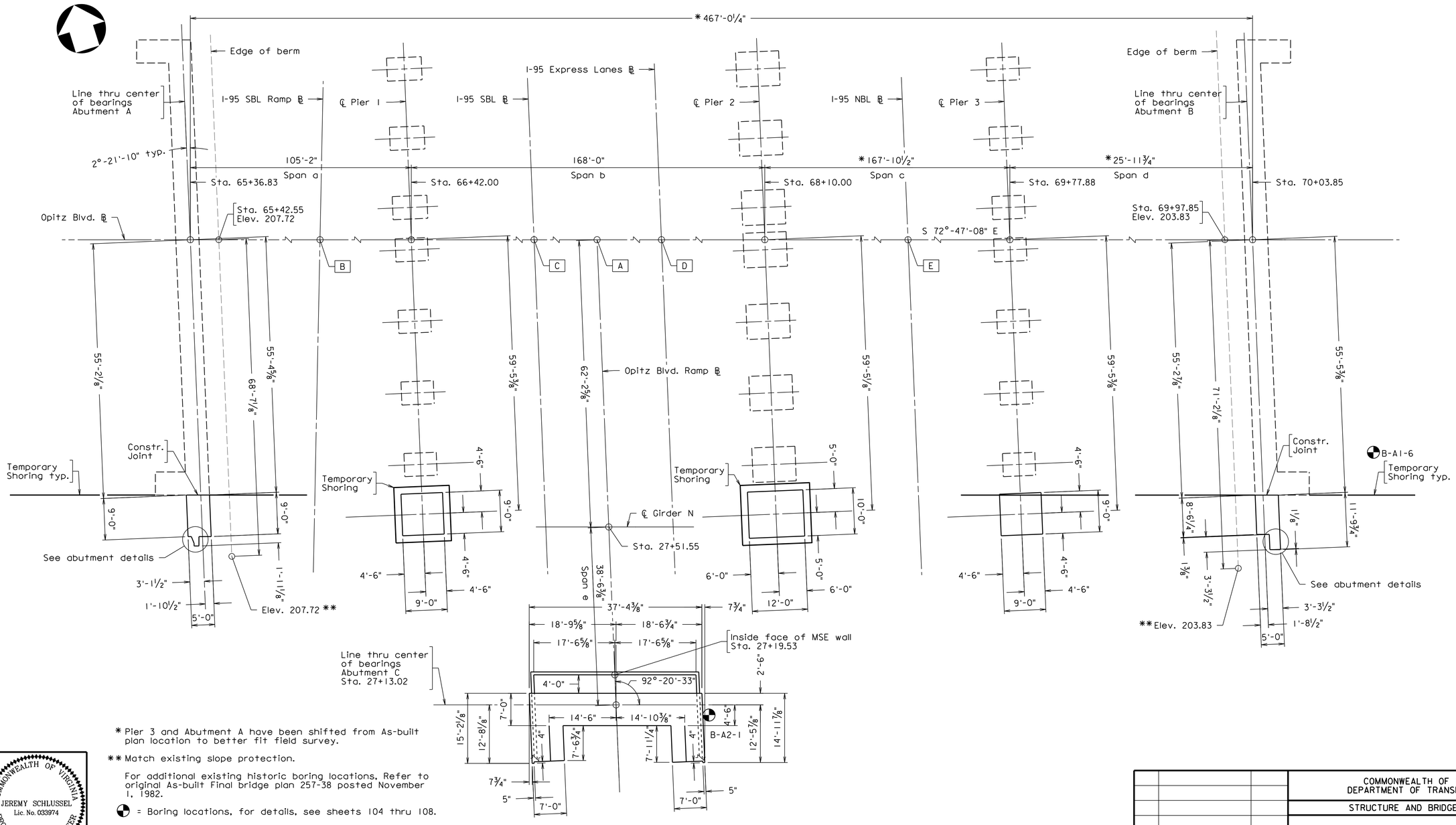

* Pier 3 and Abutment A have been shifted from As-built plan location to better fit field survey.

** Match existing slope protection.

For additional existing historic boring locations, Refer to original As-built Final bridge plan 257-38 posted November 1, 1982.

◔ = Boring locations, for details, see sheets 104 thru 108.

SUBSTRUCTURE LAYOUT

Scale: 3/32 " = 1'-0" unless otherwise noted.

© 2022, Commonwealth of Virginia

COMMONWEALTH OF VIRGINIA
JEREMY SCHLUSSEL
Lic. No. 033974
PROFESSIONAL ENGINEER

Jeremy Schlussel
2022.07.08 18:04:43 -04'00'

WHITMAN REQUARDT & ASSOCIATES
RICHMOND, VA
STRUCTURAL ENGINEER

No.	Description	Date
	Revisions	

COMMONWEALTH OF VIRGINIA
DEPARTMENT OF TRANSPORTATION

STRUCTURE AND BRIDGE DIVISION

SUBSTRUCTURE LAYOUT

Designed: AC	Date	Plan No.	Sheet No.
Drawn: CRR	July 2022	257-38A	4 of 125
Checked: CTS			

257-38A_004.dgn

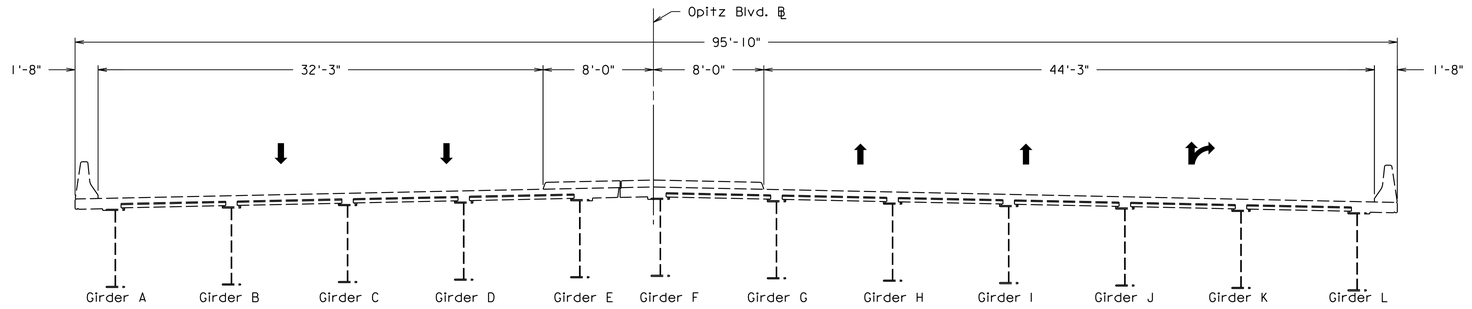

EXISTING

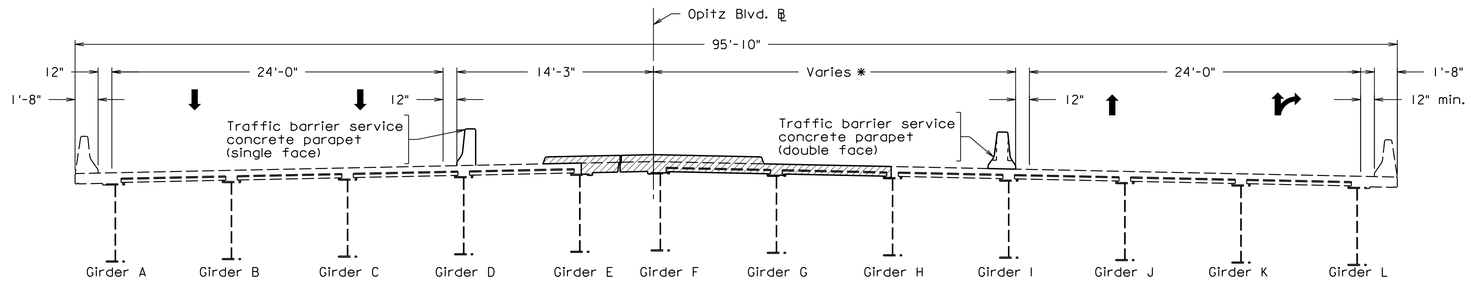

STAGE 1 DEMO

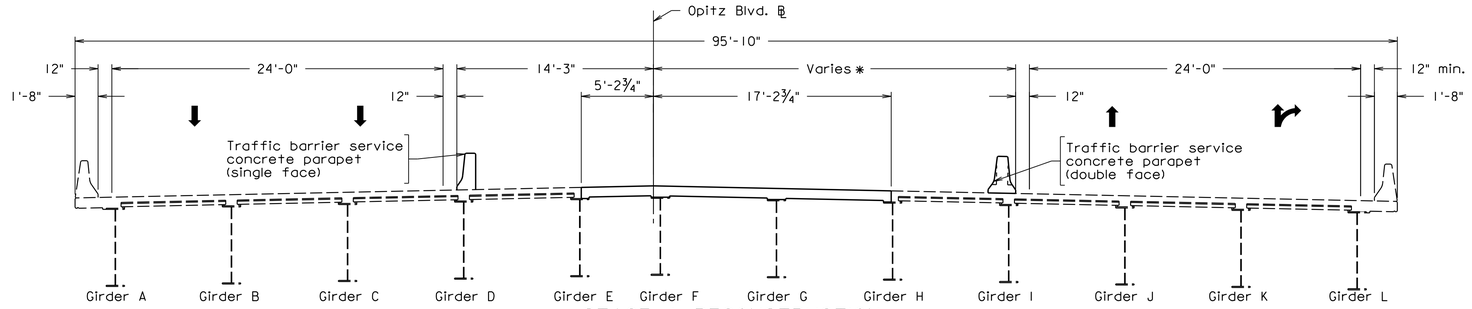

STAGE 1 RECONSTRUCTION

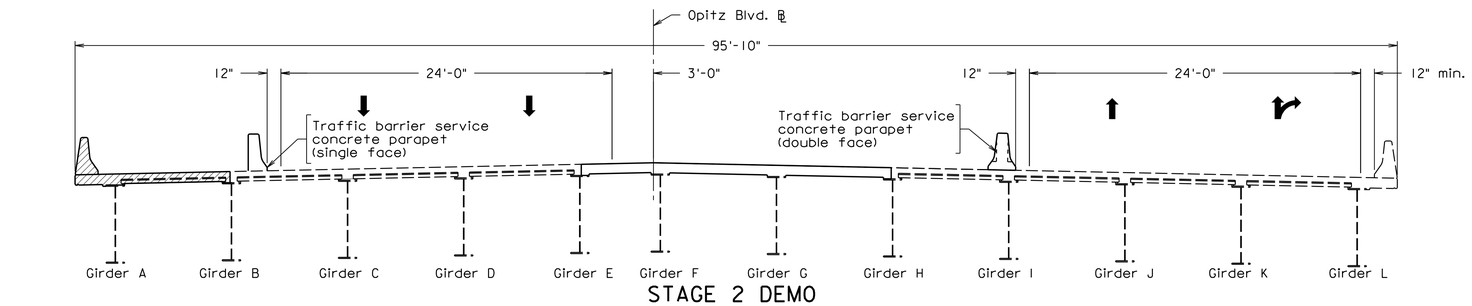

STAGE 2 DEMO

Notes:

Contractor shall feather top of proposed deck to match existing deck at construction joints.

*Dimension is 26'-3" except where varies between Sta. 65+35.14 to Sta. 66+64.56 from 22'-5" to 26'-3".

Joint reconstruction HES, joint deck slab closure HES removal, and abutment backwall reconstruction HES modifications not completed in Stages 1, 2 or 3, shall be completed in Stage 4.

Mill and overlay and median curb shall be completed in Stage 4.

Contractor shall use steel plates as necessary to facilitate construction in Stage 4. Steel plates shall be incidental to other items.

For temporary traffic barrier connection to deck details and notes, see sheet 6.

Deck slab closure shall not be performed on a girder prior to bearing replacement.

Indicates Limits of Removal.

Scale: 3/16" = 1'-0"

STATE	FEDERAL AID		STATE		SHEET NO.
	ROUTE	PROJECT	ROUTE	PROJECT	
VA.	—		95	0095-076-299, B688	5

SUGGESTED SEQUENCE OF CONSTRUCTION:

Stage 1:

Perform substructure surface repairs at any appropriate time in this stage.

Place maintenance of traffic components to include Traffic Barrier Service Concrete Parapet (single and double face).

Remove existing superstructure to limits shown for Stage 1.

Modify existing Abutments A and B.

Contractor shall measure clear distance between existing girder end and face of pier cap at Pier 3 and provide to the Engineer. Beam End Modifications shall be performed at this time if necessary and prior to deck modifications.

Jack and block beams in Stage 1 and replace bearings designated to be replaced.

Perform joint reconstruction and deck slab closure.

Install cross frames between Girders E and F.

Cast concrete deck to limits shown for Stage 1.

Cast concrete approach slab to limits shown for Stage 1.

Cast concrete median barrier.

Install traffic gates.

Complete backfill of approaches.

Complete deck grooving.

Place Stage 2 Traffic Barrier Service Concrete Parapet (single face)

Stage 2:

Adjust all maintenance of traffic components accordingly.

Remove existing superstructure to limits shown for Stage 2.

Modify existing Abutments A and B.

Contractor shall measure clear distance between existing girder end and face of pier cap at Pier 3 and provide to the Engineer. Beam End Modifications shall be performed at this time if necessary and prior to deck modifications.

Jack and block beams in Stage 2 and replace bearings.

Remove existing lateral bracing.

Perform expansion joint reconstruction and deck slab closure.

Cast concrete deck to limits shown for Stage 2.

Cast concrete approach slab to limits shown for Stage 2.

Cast pedestrian rail and CPSR rail to limits shown for Stage 2.

Install pedestrian fence and lighting.

Complete backfill of approaches.

Complete deck grooving.

Place Stage 3 Traffic Barrier Service Concrete Parapet (single face)

Stage 3:

Adjust all maintenance of traffic components accordingly.

Survey top of existing deck at centerline of Girder L.

Remove existing overhang to limits shown for Stage 3.

Install temporary shoring.

Modify and widen Abutments A and B.

Construct piers.

Construct ramp MSE walls and Abutment C.

Backfill approaches.

Remove existing lateral bracing.

Set girders.

Sequence of Construction Stage 3 continued on sheet 6.

COMMONWEALTH OF VIRGINIA
JEREMY SCHLUSSEL
Lic. No. 033974
PROFESSIONAL ENGINEER

Jeremy Schlussel
2022.07.08 18:05:15 -04'00'

WHITMAN REQUARDT & ASSOCIATES
RICHMOND, VA
STRUCTURAL ENGINEER

No.	Description	Date
	Revisions	

COMMONWEALTH OF VIRGINIA
DEPARTMENT OF TRANSPORTATION

STRUCTURE AND BRIDGE DIVISION

SEQUENCE Of CONSTRUCTION 1 OF 2

Designed: MRD	Date	Plan No.	Sheet No.
Drawn: CRR	July 2022	257-38A	5 of 125
Checked: GTS			

© 2022. Commonwealth of Virginia

257-38A_005.dgn

STATE	FEDERAL AID		STATE		SHEET NO.
	ROUTE	PROJECT	ROUTE	PROJECT	
VA.	—		95	0095-076-299, B688	6

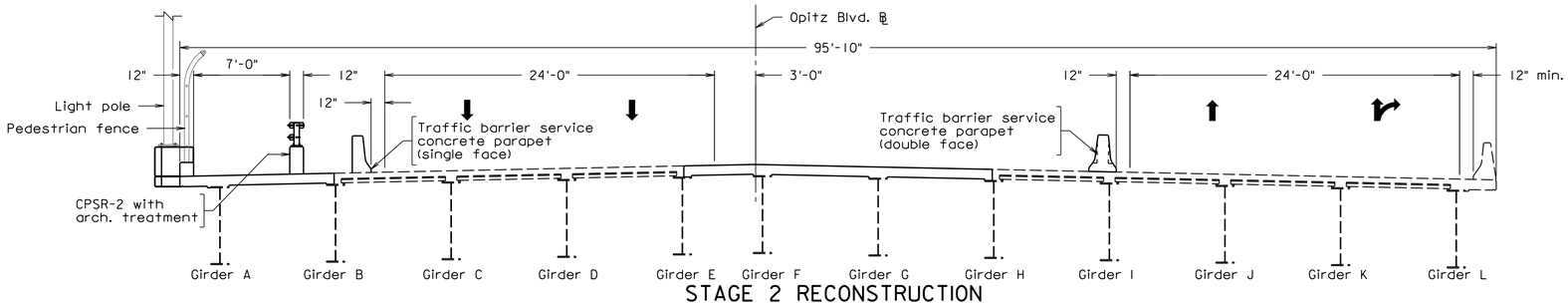

STAGE 2 RECONSTRUCTION

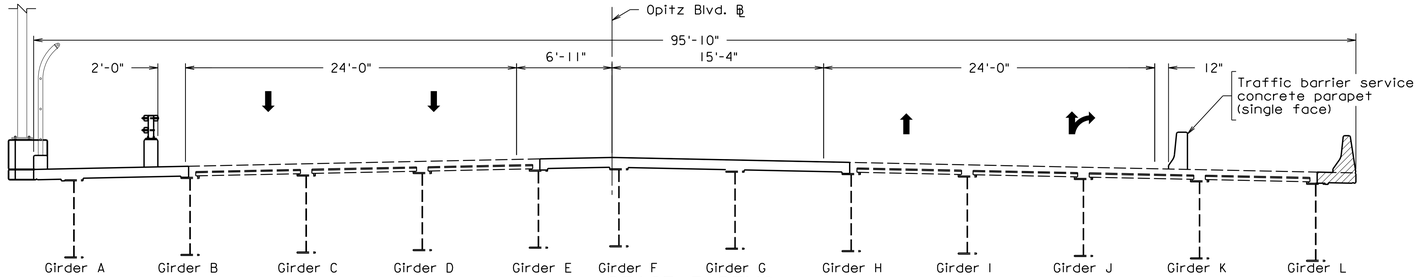

STAGE 3 DEMO

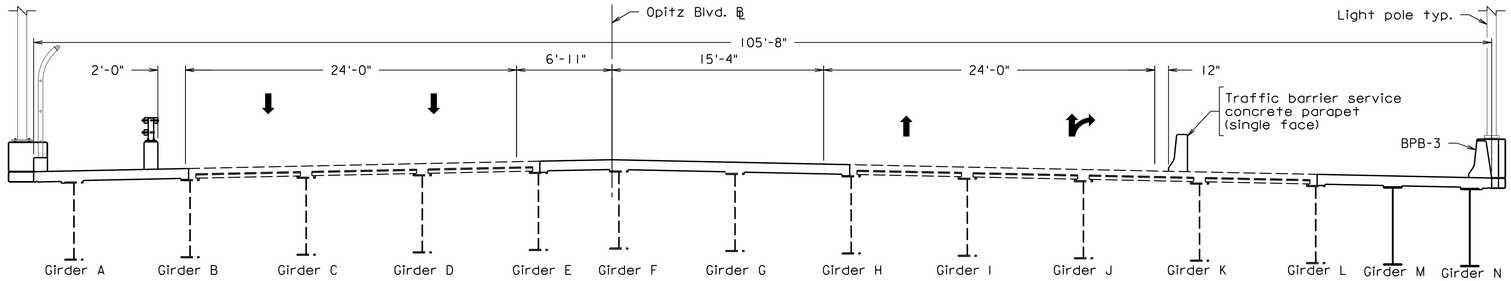

STAGE 3 RECONSTRUCTION

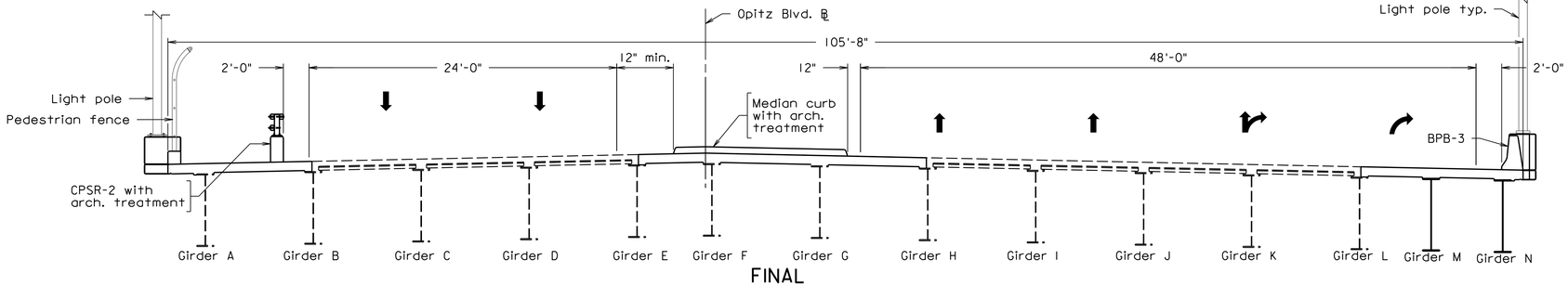

FINAL

Notes:

For additional notes, see sheet 5.

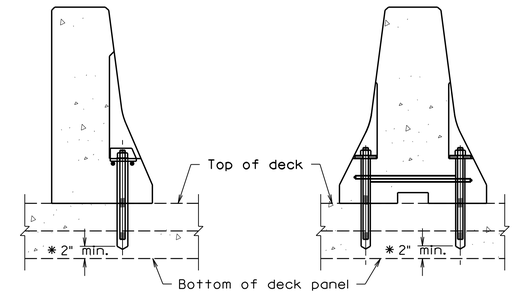

(SINGLE FACE) (DOUBLE FACE)

NOTES:

Bolt down side adjacent to traffic.

For details not shown, see VDOT Road and Bridge Standards MB-10A for Single face barrier and -11A for Double face barrier.

After removing Temporary barrier, cut ⅞" ø bolt or threaded rod as low as practical below roadway surface and fill recess with epoxy bonding compound EP-4.

Anchor system shall be tested to provide a minimum pullout of 32,000 lbs. and installed according to manufacturer's recommendations. Testing shall be performed in the existing bridge deck in accordance with ASTM E488 at locations approved by the Engineer prior to installation of temporary traffic barrier service.

Location of prestressing strands in existing prestressed deck panels is unknown. Dimension provided assumes clearance of prestressing strands based on typical prestressed panels. Contractor shall notify the Engineer if a prestressing strand is damaged.

Contractor may use bolt through connection as detailed in VDOT Road and Bridge Standards in lieu of anchor system shown. Contractor shall locate prestressing strands in existing deck panels prior to drilling for anchors.

TRAFFIC BARRIER SERVICE CONCRETE PARAPET

Not to scale

SUGGESTED SEQUENCE OF CONSTRUCTION CONTINUED:

Stage 3 continued:

Contractor shall measure clear distance between existing girder end and face of pier cap at Pier 3 and provide to the Engineer. Beam End Modifications shall be performed at this time if necessary and prior to deck modifications.

Jack and block beams in Stage 3 and replace bearings.

Cast concrete deck to limits shown for Stage 3.

Perform joint reconstruction and deck slab closure.

Install approach slabs to limits shown for Stage 3.

Install bridge parapet to limits shown for Stage 3.

Install moment slab, parapet and pier protection at MSE wall.

Install guardrail and end terminals.

Complete deck grooving.

Install bridge pier protection

Upon completion of Stage 3 construction, remove all Traffic Barrier Service Concrete Parapet (single face) and repair anchor locations.

Stage 4:

Adjust all maintenance of traffic components accordingly.

Modify existing Abutments A and B.

Jack and block beams in Stage 4 and replace bearings.

Perform joint reconstruction and deck slab closure.

Perform milling, hydrodemolition and overlay deck operations.

Construct remaining median curb.

Install adhesive based joint sealers.

COMMONWEALTH OF VIRGINIA
JEREMY SCHLUSSEL
Lic. No. 033974
PROFESSIONAL ENGINEER

Jeremy Schlussel
2022.07.08 18:05:36 -04'00'

WHITMAN REQUARDT & ASSOCIATES
RICHMOND, VA
STRUCTURAL ENGINEER

No.	Description	Date
	Revisions	

COMMONWEALTH OF VIRGINIA
DEPARTMENT OF TRANSPORTATION

STRUCTURE AND BRIDGE DIVISION

SEQUENCE Of CONSTRUCTION 2 OF 2

Designed: MRD	Date	Plan No.	Sheet No.
Drawn: CRR	July 2022	257-38A	6 of 125
Checked: DTS			

Scale: 3/16" = 1'-0" unless otherwise noted.

© 2022, Commonwealth of Virginia

257-38A_006.dgn

STATE	FEDERAL AID		STATE		SHEET NO.
	ROUTE	PROJECT	ROUTE	PROJECT	
VA.	—		95	0095-076-299, B688	7

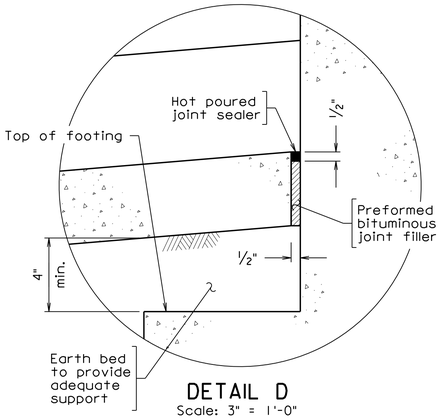

DETAIL D
Scale: 3" = 1'-0"

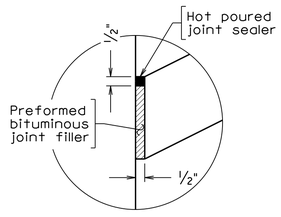

DETAIL C
Scale: 3" = 1'-0"

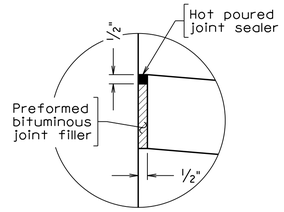

DETAIL E
Scale: 3" = 1'-0"

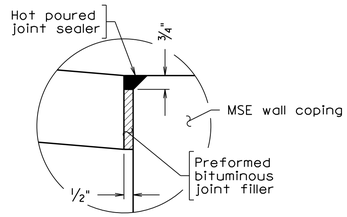

DETAIL F
Scale: 3" = 1'-0"

Notes:

Slope Protection shall be in accordance with Section 415 of the Specifications.

Contractor shall grade slope, filling any voids prior to installation of proposed slope protection.

The cost for grading, filling of voids, and seeding shall be included in the unit bid price for Concrete Slab Slope Protection 4".

Contractor shall extend new concrete slab slope protection to bottom of existing slope or as directed by the Engineer.

Contractor shall provide a minimum ½ inch joint between any column face with preformed joint filler and hot poured joint sealer.

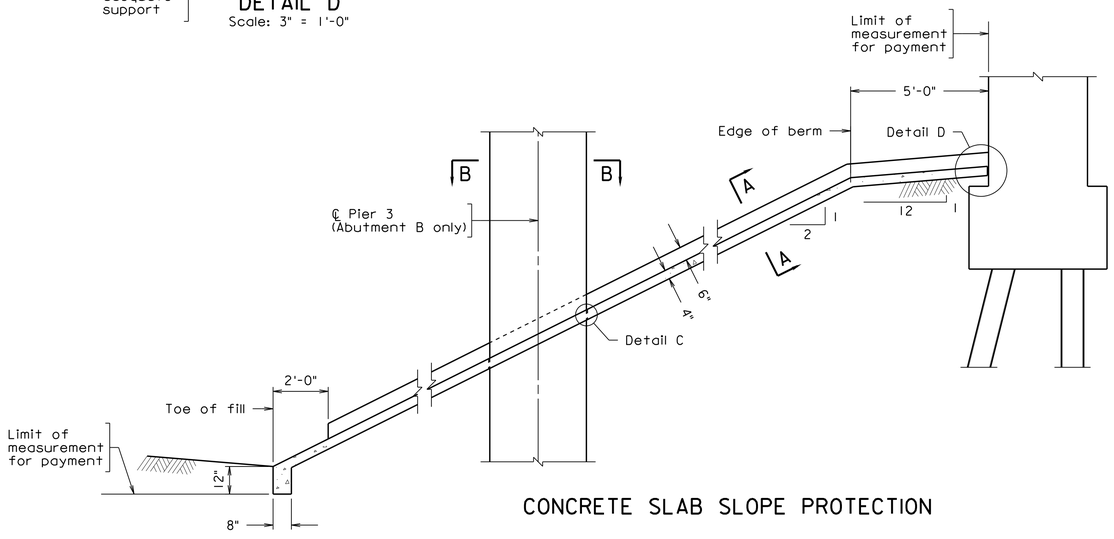

CONCRETE SLAB SLOPE PROTECTION

Indicates Limits of removal

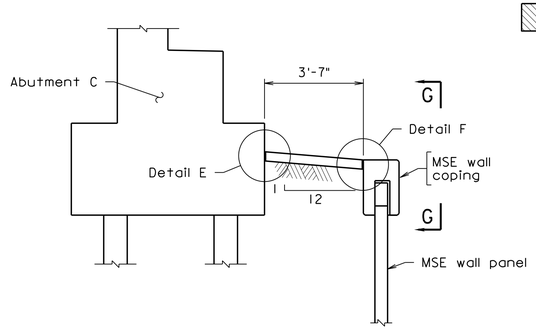

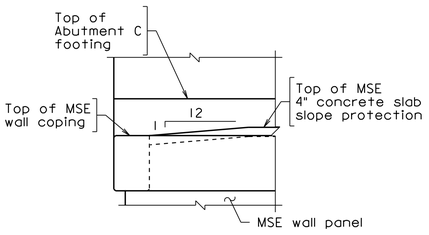

PART SECTION G-G

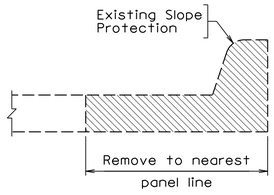

CURB REMOVAL DETAIL
Scale: 1½" = 1'-0"

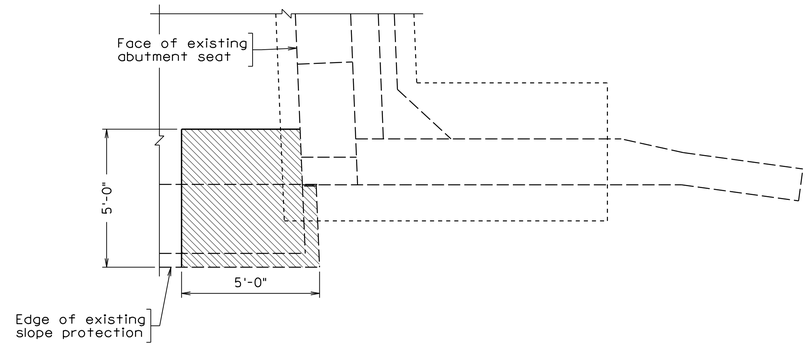

SLOPE PROTECTION PLAN

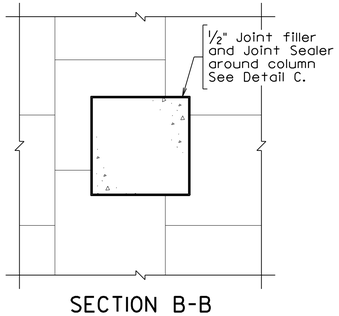

SECTION B-B

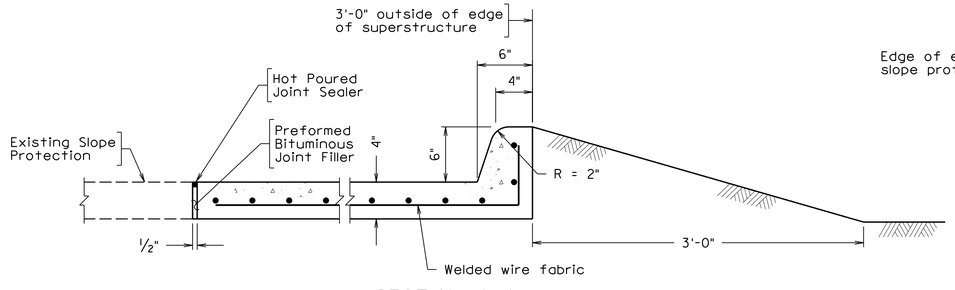

SECTION A-A
Scale: 1½" = 1'-0"

Scale: ⅜" = 1'-0" unless otherwise noted.

© 2022, Commonwealth of Virginia

COMMONWEALTH OF VIRGINIA
JEREMY SCHLUSSEL
Lic. No. 033974
PROFESSIONAL ENGINEER

Jeremy Schlussel
2022.07.08 18:05:57 -04'00'

WHITMAN REQUARDT & ASSOCIATES
RICHMOND, VA
STRUCTURAL ENGINEER

No.	Description	Date
	Revisions	

COMMONWEALTH OF VIRGINIA
DEPARTMENT OF TRANSPORTATION

STRUCTURE AND BRIDGE DIVISION

SLOPE PROTECTION DETAILS

Designed: MRD	Date	Plan No.	Sheet No.
Drawn: CRR	July 2022	257-38A	7 of 125
Checked: RTS			

257-38A_007.dgn

STATE	FEDERAL AID		STATE		SHEET NO.
	ROUTE	PROJECT	ROUTE	PROJECT	
VA.	—		95	0095-076-299, B688	8

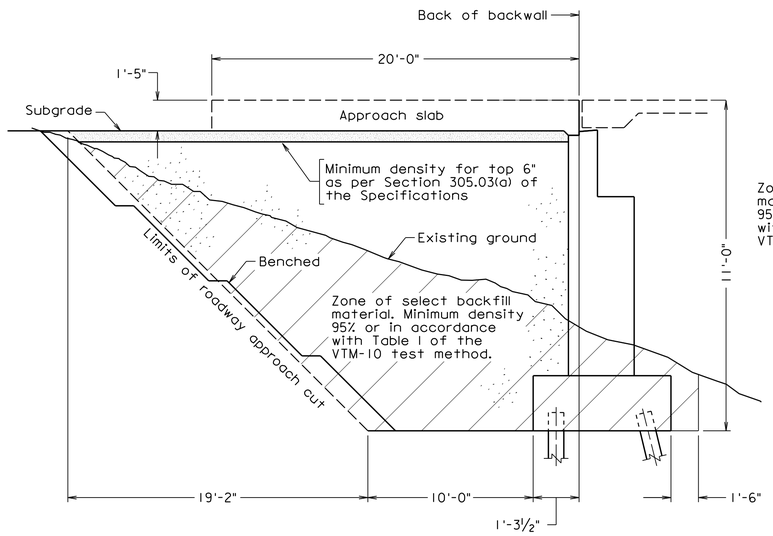

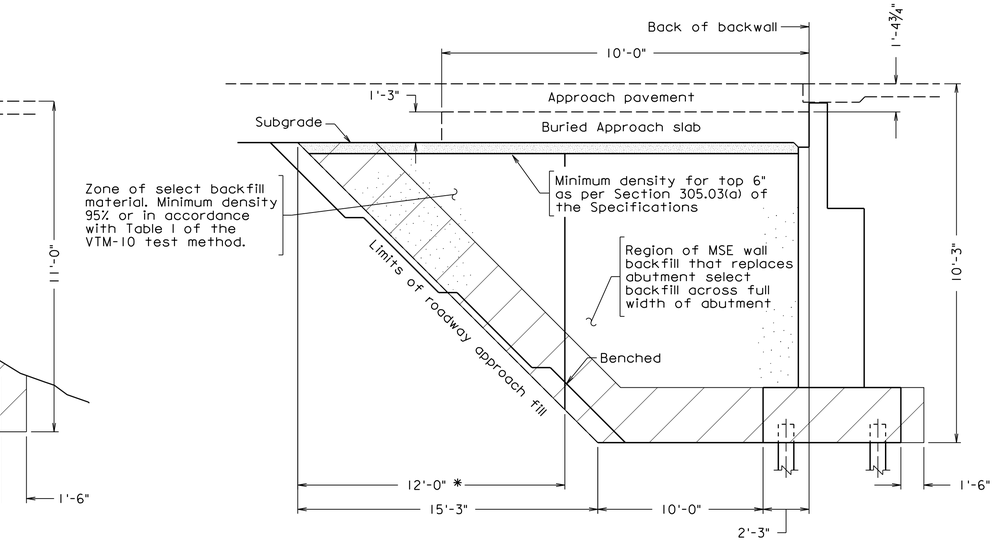

To be paid for as structure excavation

* Estimated limit of quantity for structure excavation and min. CBR 30 select fill

Notes:

Material in the abutment select backfill zone shall be Select Material Type I, minimum CBR 30, and shall be compacted in accordance with Sections 303 and 305 of the VDOT Road and Bridge Specifications. 21A or 21B may be substituted for Select Material Type I, minimum CBR 30, at no additional cost to the Department.

In cut situations, material with strength characteristics greater than the select backfill may be left in place.

The final depth A of the embankment side slopes shall be regular embankment material placed and finished as required.

The estimated quantity given for the abutment select backfill zone has been reduced by the estimated quantity of MSE wall backfill in the zone. ((Note to be used when MSE walls compose all or part of the abutment.)) ((Delete note if MSE walls are not utilized.))

At the Contractor's option and at no additional cost to the Department, the MSE wall backfill may be used for the entire abutment select backfill zone in lieu of Select Material Type I, minimum CBR 30 excluding #10 screenings, which may not be used in the abutment select backfill zone. If the MSE wall backfill is #8 or coarser, a separator fabric shall be used between the MSE wall backfill and roadway subgrade, and between the select backfill and the approach roadway cut or fill. The separator fabric shall be needle-punched, non-woven geotextile in accordance with Section 245.03 (d)2 of the Specifications or in accordance with the Special Provision located in VDOT's Manual of the Structure and Division, Part 2, File No. 17.13-8 at no additional cost when utilizing this option.

SECTION THROUGH ABUTMENTS A and B - CUT SECTION

Abutment drainage not shown

SECTION THROUGH ABUTMENT C - FILL SECTION

Abutment drainage not shown

257-38A_008.dgn

COMMONWEALTH OF VIRGINIA
JEREMY SCHLUSSEL
Lic. No. 033974
PROFESSIONAL ENGINEER

Jeremy Schlussel
2022.07.08 18:02:41 -04'00'

WHITMAN REQUARDT & ASSOCIATES
RICHMOND, VA
STRUCTURAL ENGINEER

Not to scale:

© 2022, Commonwealth of Virginia

No.	Description	Date
	Revisions	

COMMONWEALTH OF VIRGINIA
DEPARTMENT OF TRANSPORTATION

STRUCTURE AND BRIDGE DIVISION

ABUTMENT BACKFILL DETAILS

Designed: MRD	Date	Plan No.	Sheet No.
Drawn: CRR	July 2022	257-38A	8 of 125
Checked: CTS			

STATE	FEDERAL AID		STATE		SHEET NO.
	ROUTE	PROJECT	ROUTE	PROJECT	
VA.	—		95	0095-076-299, B688	9

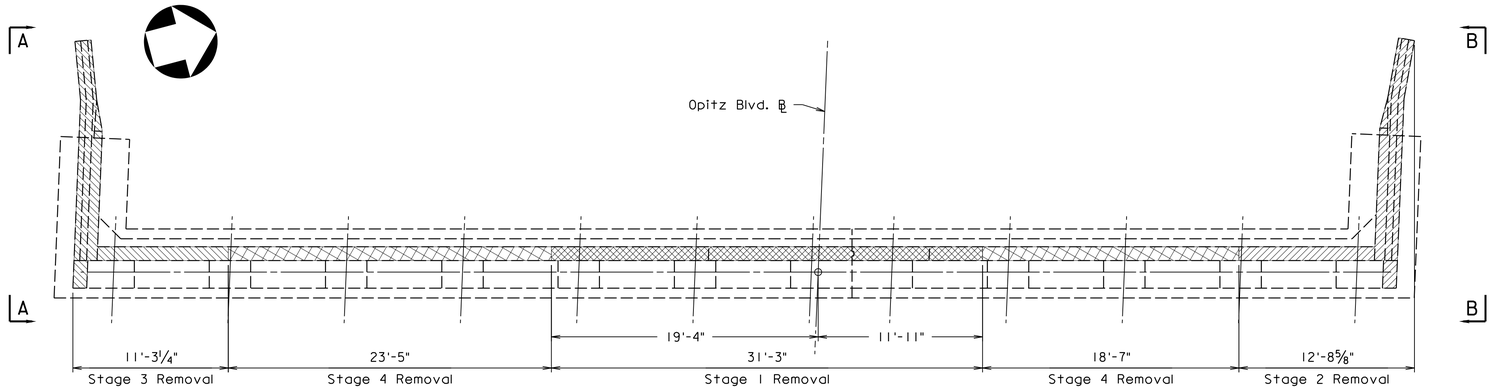

ABUTMENT A REMOVAL PLAN

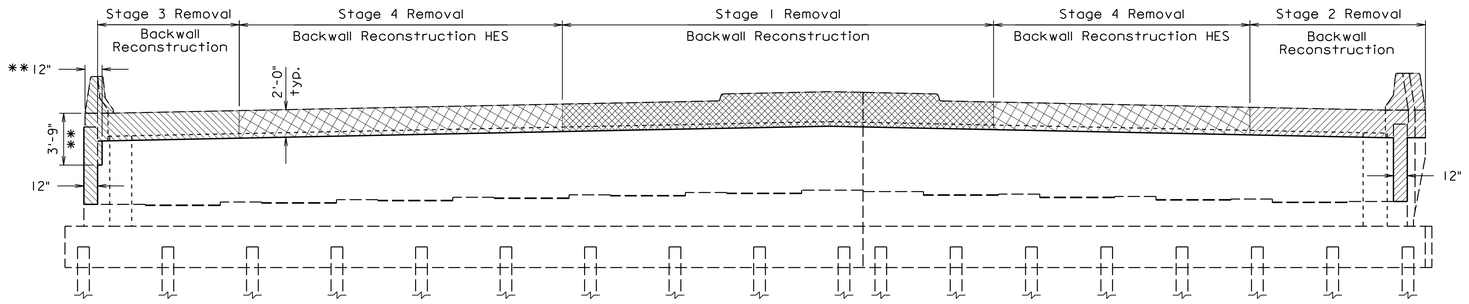

ABUTMENT A REMOVAL ELEVATION

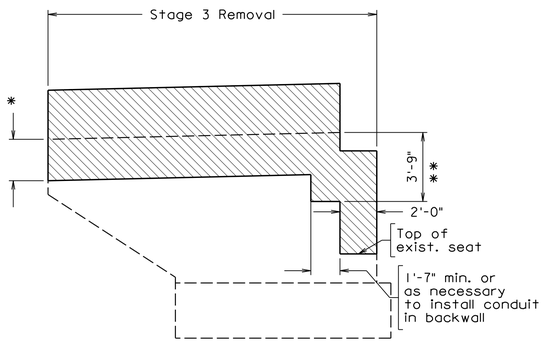

VIEW A-A
Scale: ¼" = 1'-0"

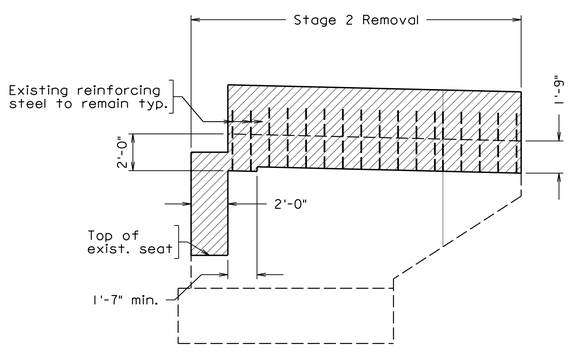

VIEW B-B
Scale: ¼" = 1'-0"

Notes:

Contractor shall take care not to damage portion of existing structure to remain in service.

Contractor shall provide a clean edge of demolition with a 1 inch deep saw cut.

* Wingwall removal may occur after abutment modifications to allow for temporary shoring. Wingwall shall be removed to a minimum of 3 feet below proposed top of ground and shall provide clearance for conduit.

** Dimension may be adjusted to allow for installation of conduit.

For abutment modification details, see sheets 10, 11, 12, 13, and 14.

Legend:

- Denotes portion of existing structure to be removed during Stage 1
- Denotes portion of existing structure to be removed during Stage 2
- Denotes portion of existing structure to be removed during Stage 3
- Denotes portion of existing structure to be removed during Stage 4

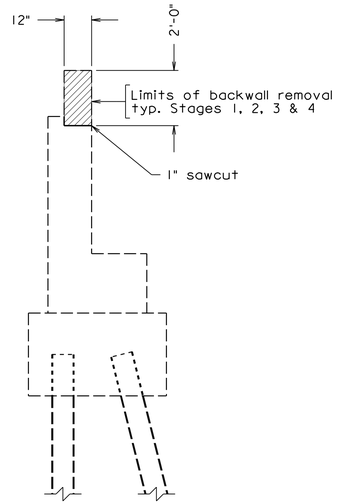

EXISTING ABUTMENT A SECTION
Scale: ⅜" = 1'-0"

257-38A_009.dgn

COMMONWEALTH OF VIRGINIA
JEREMY SCHLUSSEL
Lic. No. 033974
PROFESSIONAL ENGINEER

Jeremy Schlussel
2022.07.08 18:03:06 -04'00'

WHITMAN REQUARDT & ASSOCIATES
RICHMOND, VA
STRUCTURAL ENGINEER

Scale: 3/16" = 1'-0" unless otherwise noted.

© 2022, Commonwealth of Virginia

No.	Description	Date
	Revisions	

COMMONWEALTH OF VIRGINIA
DEPARTMENT OF TRANSPORTATION

STRUCTURE AND BRIDGE DIVISION

ABUTMENT A REMOVAL

Designed: RDS	Date	Plan No.	Sheet No.
Drawn: MWL	July 2022	257-38A	9 of 125
Checked: SLH			

STATE	FEDERAL AID		STATE		SHEET NO.
	ROUTE	PROJECT	ROUTE	PROJECT	
VA.	—		95	0095-076-299, B688	10

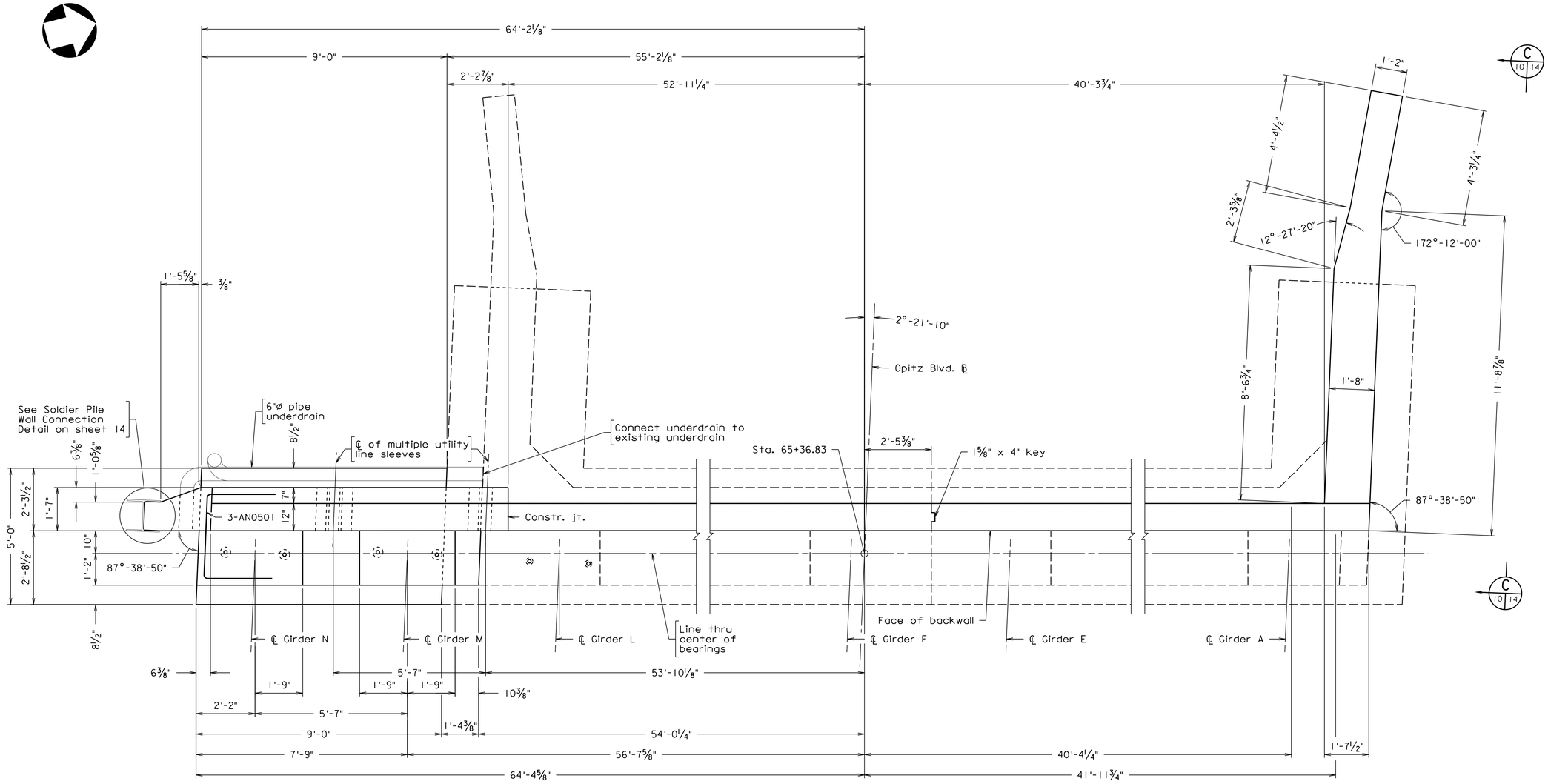

PLAN

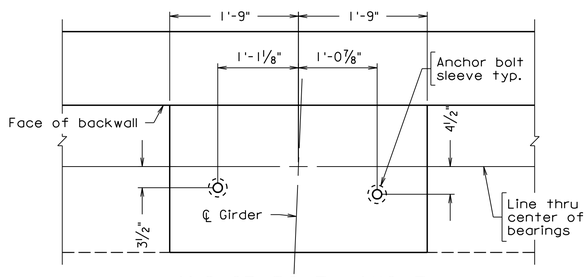

ANCHOR BOLT LAYOUT
GIRDERS A-C AND K-L
Scale: 1" = 1'-0"

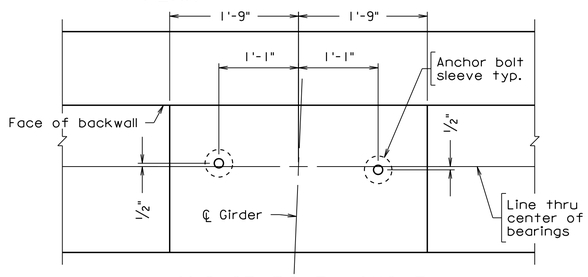

ANCHOR BOLT LAYOUT
GIRDERS M AND N
Scale: 1" = 1'-0"

Scale: ½" = 1'-0" unless otherwise noted.

Notes:

For elevation view, Backwall construction joint locations and elevations, see sheet 11.

For pile layout and footing plan, see sheet 12.

For typical section, see sheet 13.

For wingwall details, see sheet 14.

For anchor bolt sleeve details, see sheet 34.

COMMONWEALTH OF VIRGINIA
JEREMY SCHLUSSEL
Lic. No. 033974
PROFESSIONAL ENGINEER

Jeremy Schlussel
2022.07.08 18:02:21 -04'00'

WHITMAN REQUARDT & ASSOCIATES
RICHMOND, VA
STRUCTURAL ENGINEER

© 2022, Commonwealth of Virginia

No.	Description	Date
	Revisions	

COMMONWEALTH OF VIRGINIA
DEPARTMENT OF TRANSPORTATION

STRUCTURE AND BRIDGE DIVISION

ABUTMENT A
PLAN

Designed: RDS	Date	Plan No.	Sheet No.
Drawn: MWL	July 2022	257-38A	10 of 125
Checked: SLH			

257-38A_010.dgn

STATE	FEDERAL AID		STATE		SHEET NO.
	ROUTE	PROJECT	ROUTE	PROJECT	
VA.	—		95	0095-076-299, B688	11

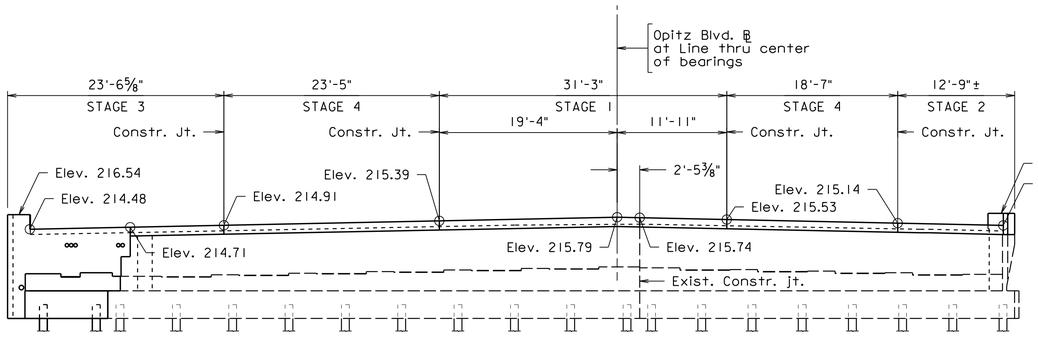

ABUTMENT BACKWALL CONSTRUCTION JOINT LOCATIONS AND ELEVATIONS

Scale: ⅛" = 1'-0"

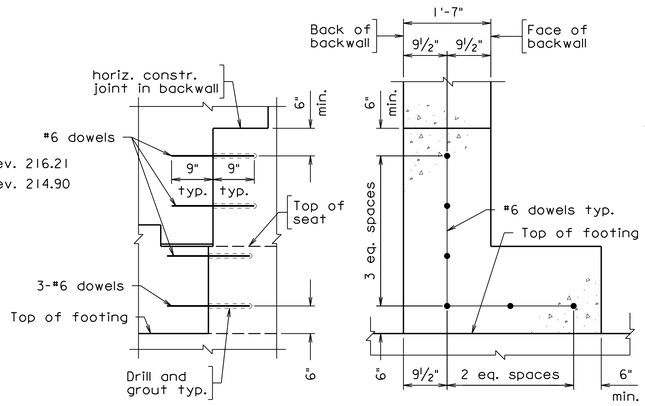

PART ELEVATION PART SECTION

DOWEL DETAIL

Scale: ¾" = 1'-0"

Notes:

✱Proposed bottom of footing shall match existing bottom of footing.

✱✱Conduit shall be located to clear cross frames.

Backwall construction joints shall be perpendicular to face of backwall.

The joining of new and existing concrete abutment footing shall be in accordance with Section 412 of the VDOT Standard Specifications. Grout for drilled in dowels shall conform to Section 218 of the VDOT Standard Specifications.

Contractor shall install couplers or AH0608 coupler bars for AH0607 bars at any construction joint necessary for their means and methods to perform backwall reconstruction except at existing construction joint.

The number of AH0608 coupler bars shall be determined by Contractor and is not included in reinforcing steel schedule.

AH0607 bars shall be cut to length determined by Contractor's construction joint location.

For plan view, see sheet 10.

For pile layout, footing plan, and Bearing pad details see sheet 12.

For typical section, see sheet 13.

For wingwall elevation, details and Solider Pile Wall Connection Detail, see sheet 14.

For Pipe Penetration Detail, see sheet 92.

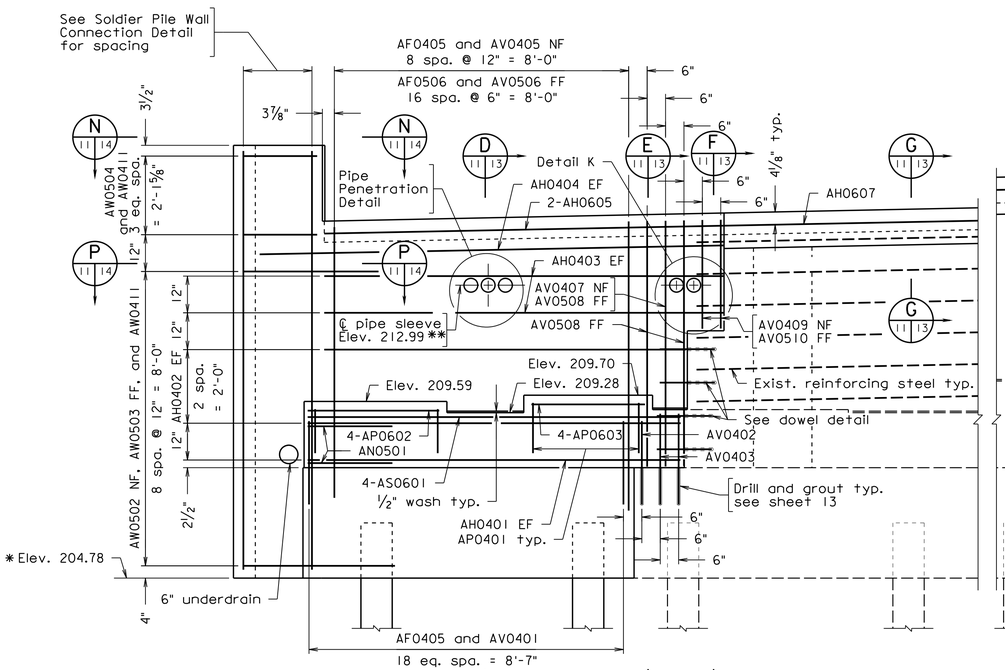

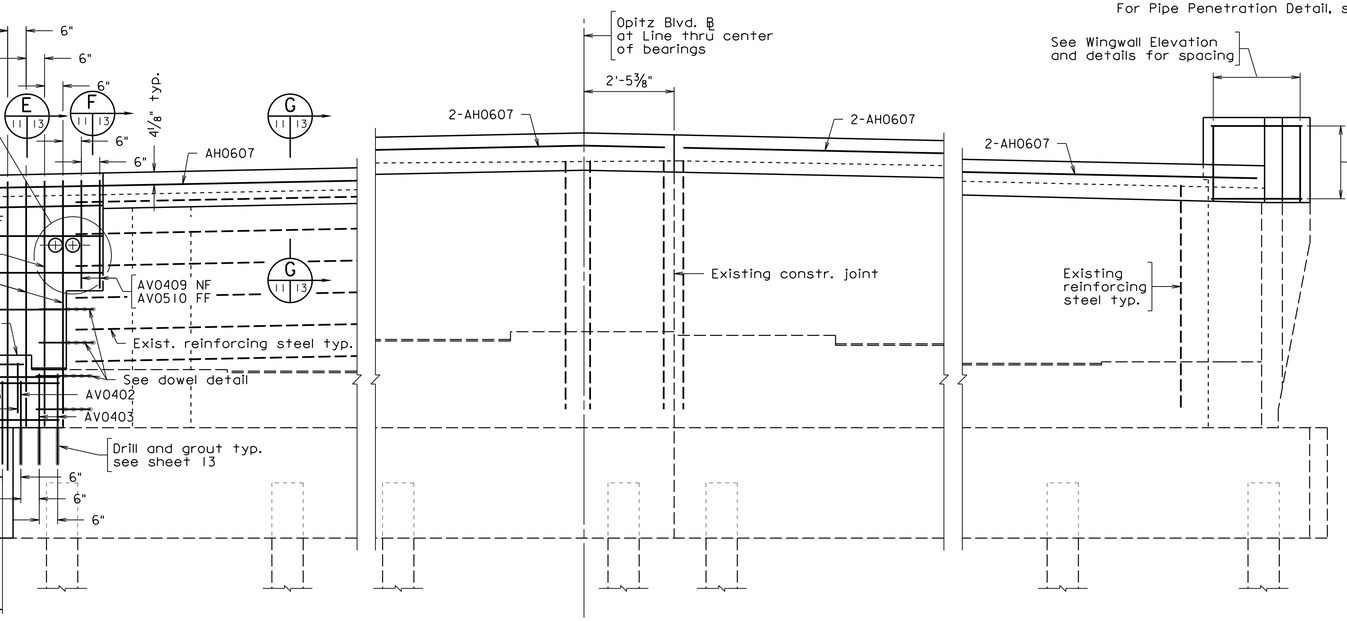

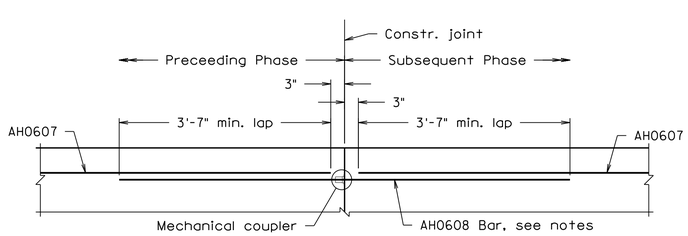

MECHANICAL SPLICE DETAIL

Not to scale

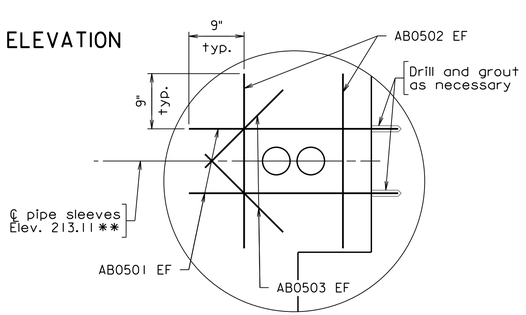

DETAIL K

Scale: 1" = 1'-0"

Scale: ½" = 1'-0" unless otherwise noted.

© 2022, Commonwealth of Virginia

COMMONWEALTH OF VIRGINIA
JEREMY SCHLUSSEL
Lic. No. 033974
PROFESSIONAL ENGINEER

Jeremy Schlussel
2022.07.08 18:01:58 -04'00'

WHITMAN REQUARDT & ASSOCIATES
RICHMOND, VA
STRUCTURAL ENGINEER

No.	Description	Date
	Revisions	

COMMONWEALTH OF VIRGINIA
DEPARTMENT OF TRANSPORTATION

STRUCTURE AND BRIDGE DIVISION

ABUTMENT A ELEVATION

Designed: RDS	Date	Plan No.	Sheet No.
Drawn: MWL	July 2022	257-38A	11 of 125
Checked: SLH			

257-38A_011.dgn

STATE	FEDERAL AID		STATE		SHEET NO.
	ROUTE	PROJECT	ROUTE	PROJECT	
VA.	—		95	0095-076-299, B688	12

PILE DATA TABLE

Nominal Axial Resistance Measured During Driving (Tons/pile)	Factored Axial Resistance (Tons/pile)	Estimated Tip Elevation	Minimum Tip Elevation
192	125	150	175

The Strength Limit State controls the pile design.

Notes:

For Abutment A typical sections, see sheet 13.

The joining of new and existing concrete abutment footing shall be in accordance with Section 412 of the VDOT Standard Specifications. Grout for drilled in dowels shall conform to Section 218 of the VDOT Standard Specifications.

The one required test pile and dynamic pile test are required to be done prior to driving any other permanent piling within the same substructure unit.

For installation of piles near existing footing, additional length of pile may be required to clear existing footing. Additonal length is not included in the estimated quantities.

Legend:

↓ Denotes direction of 3:12 batter.

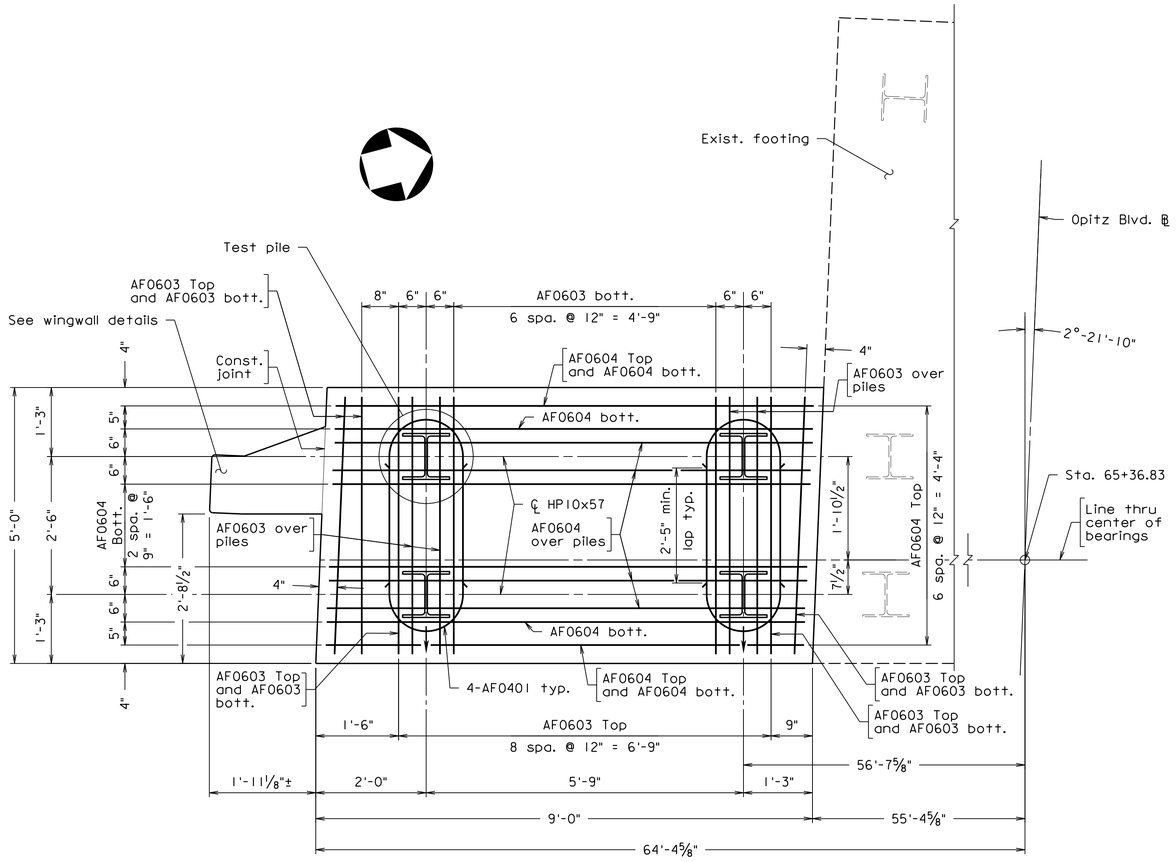

FOOTING PLAN

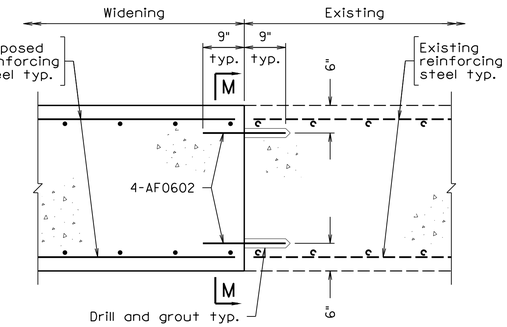

DOWEL BAR DETAIL

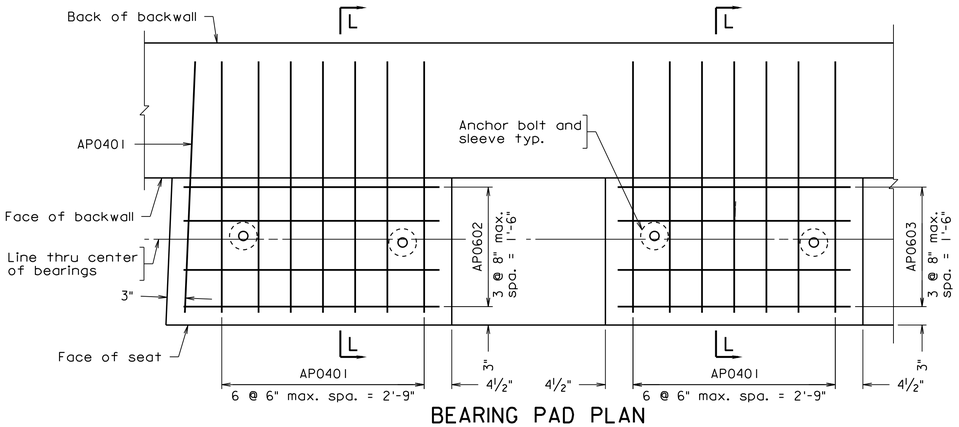

BEARING PAD PLAN

Scale: 1" = 1'-0"

AP0401 and AP0602 bar spacing may be adjusted where required to clear anchor bolt sleeves.

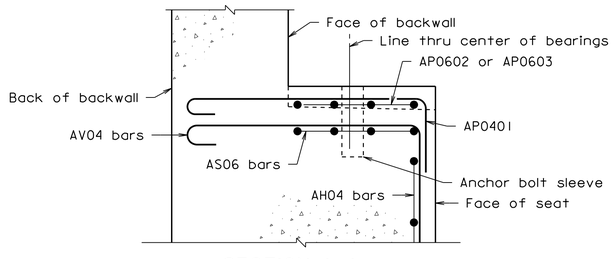

SECTION L-L

Not to scale

Backwall reinforcing steel not shown for clarity.

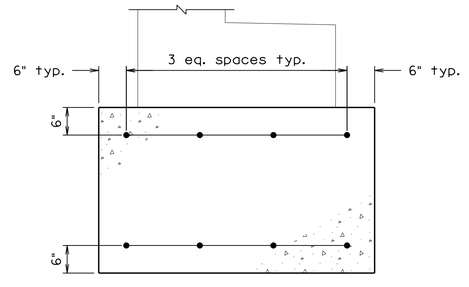

SECTION M-M

Scale: ¾" = 1'-0"

Footing reinforcing steel not shown for clarity.

257-38A_012.dgn

COMMONWEALTH OF VIRGINIA
JEFFREY S. BASFORD
Lic. No. 043143
PROFESSIONAL ENGINEER

Jeffrey S Basford
2022.07.08 18:00:59 -04'00'

WHITMAN REQUARDT & ASSOCIATES
RICHMOND, VA
GEOTECHNICAL ENGINEER

COMMONWEALTH OF VIRGINIA
JEREMY SCHLUSSEL
Lic. No. 033974
PROFESSIONAL ENGINEER

Jeremy Schlussel
2022.07.08 19:11:10 -04'00'

WHITMAN REQUARDT & ASSOCIATES
RICHMOND, VA
STRUCTURAL ENGINEER

Scale: ¾" = 1'-0" unless otherwise noted.

© 2022, Commonwealth of Virginia

No.	Description	Date
	Revisions	

COMMONWEALTH OF VIRGINIA
DEPARTMENT OF TRANSPORTATION

STRUCTURE AND BRIDGE DIVISION

ABUTMENT A
FOOTING PLAN AND PILE LAYOUT

Designed: RDS	Date	Plan No.	Sheet No.
Drawn: MWL	July 2022	257-38A	12 of 125
Checked: SLH			

STATE	FEDERAL AID		STATE		SHEET NO.
	ROUTE	PROJECT	ROUTE	PROJECT	
VA.	—		95	0095-076-299, B688	13

Notes:

* AS0601 bar spacing may be adjusted where required to clear anchor bolt sleeves.

The 1½" expanded rubber joint filler shall extend the full length of the deck slab extension.

Geocomposite wall drain shall extend from approach slab notch or 3'-0" below finished grade down to underdrain.

6" diameter underdrain shall connect to existing underdrain and run along back of backwall at bottom of wall drain with 1% slope.

For Virginia Micro Abutment Detail, see sheet 66.

For demolition limits of backwall, see sheet 9.

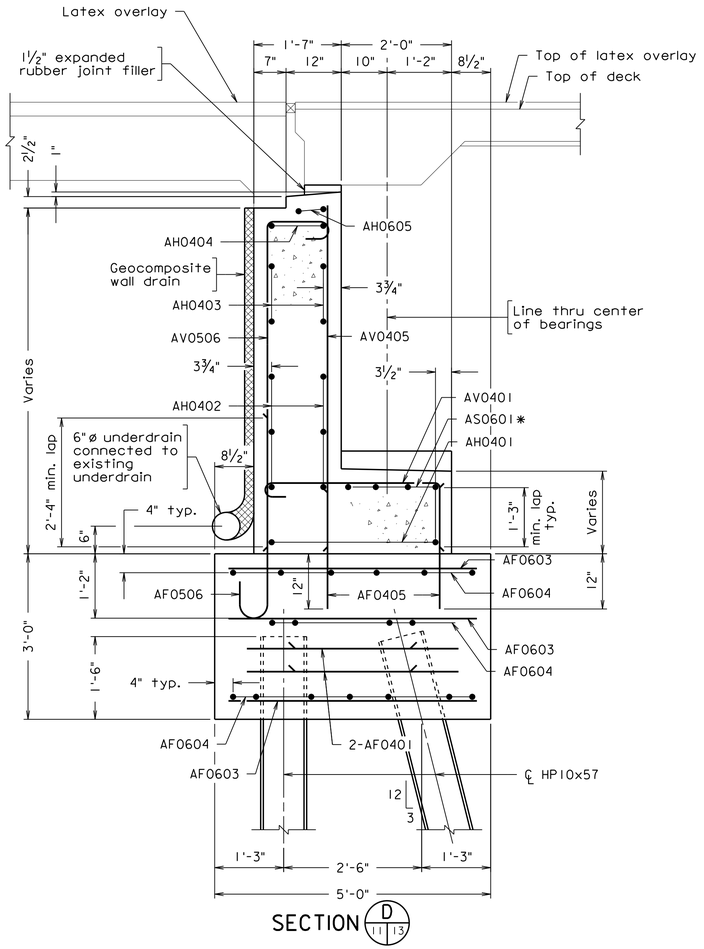

SECTION D (11 | 13)

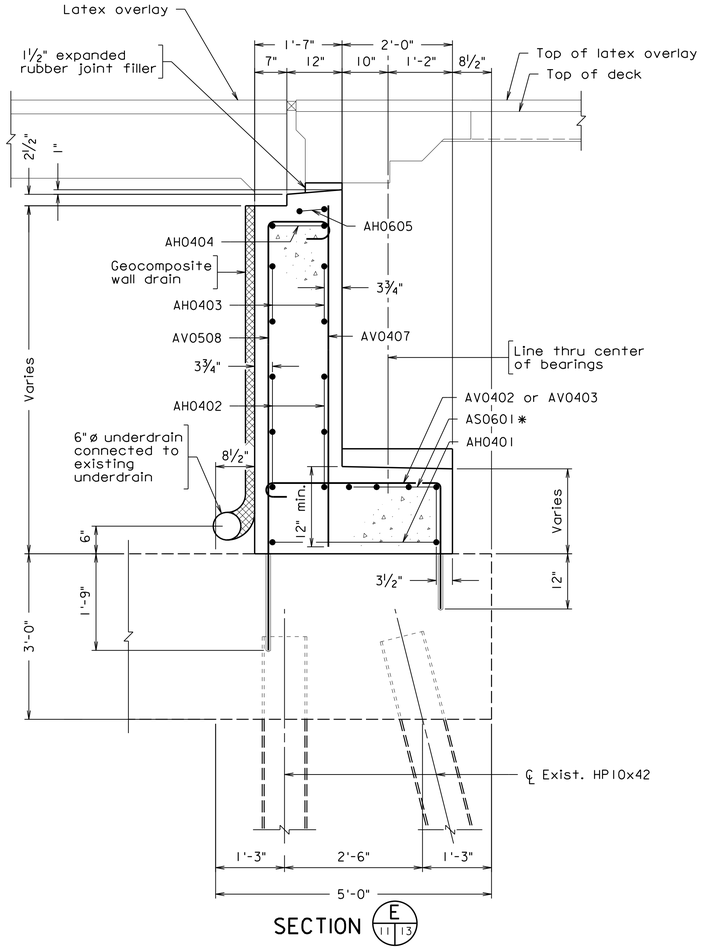

SECTION E (11 | 13)

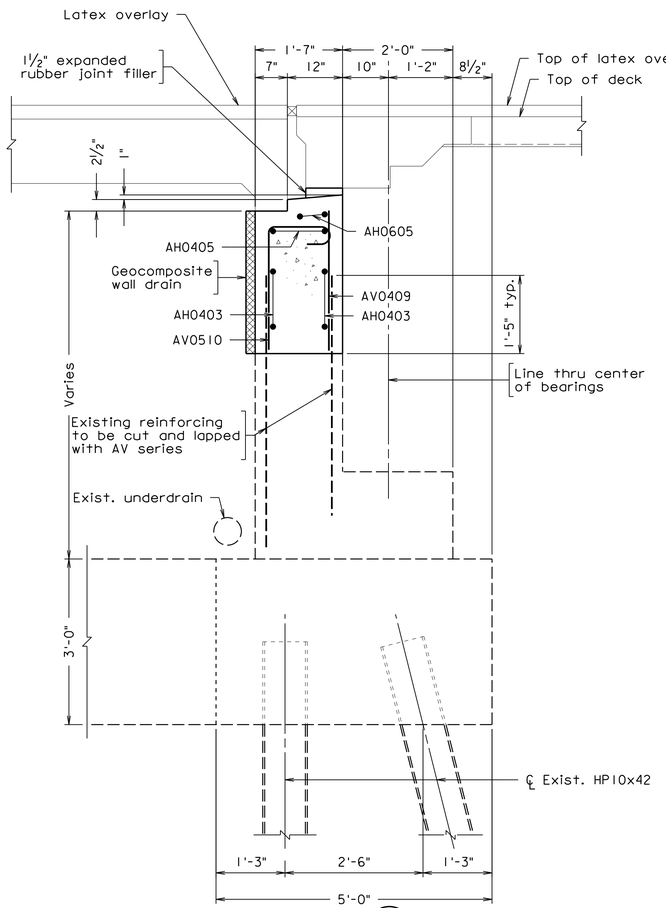

SECTION F (11 | 13)

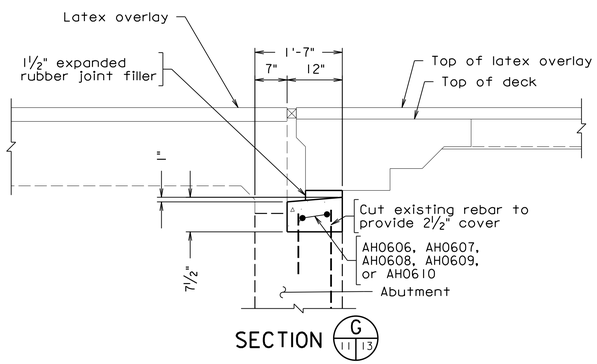

SECTION G (11 | 13)

257-38A_013.dgn

COMMONWEALTH OF VIRGINIA
JEREMY SCHLUSSEL
Lic. No. 033974
PROFESSIONAL ENGINEER

Jeremy Schlussel
2022.07.08 18:01:10 -04'00'

WHITMAN REQUARDT & ASSOCIATES
RICHMOND, VA
STRUCTURAL ENGINEER

Scale: ¾" = 1'-0" unless otherwise noted.

© 2022, Commonwealth of Virginia

No.	Description	Date
	Revisions	

COMMONWEALTH OF VIRGINIA
DEPARTMENT OF TRANSPORTATION

STRUCTURE AND BRIDGE DIVISION

ABUTMENT A
TYPICAL SECTIONS

Designed: RDS	Date	Plan No.	Sheet No.
Drawn: MWL	July 2022	257-38A	13 of 125
Checked: SLH			

STATE	FEDERAL AID		STATE		SHEET NO.
	ROUTE	PROJECT	ROUTE	PROJECT	
VA.	—		95	0095-076-299, B688	14

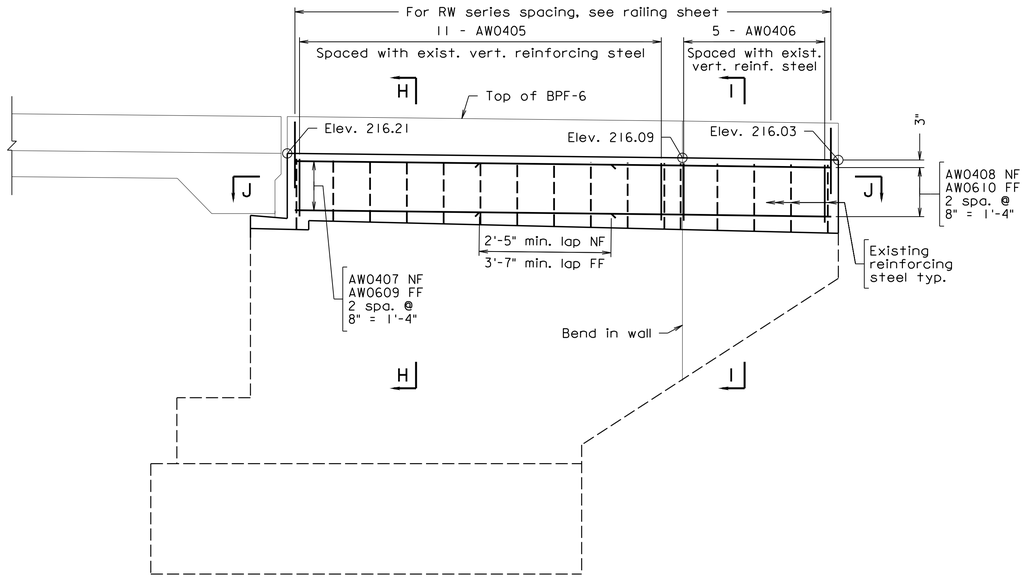

VIEW C (11 | 14)

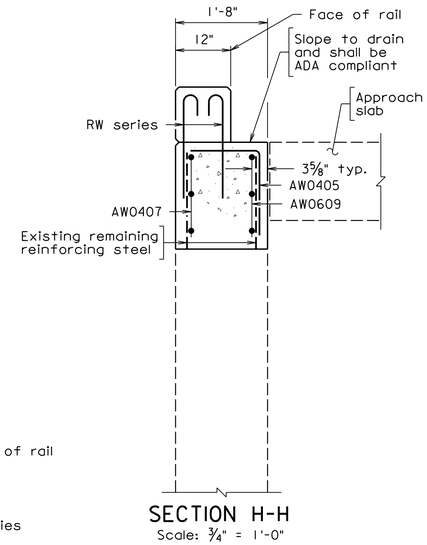

SECTION H-H
Scale: ¾" = 1'-0"

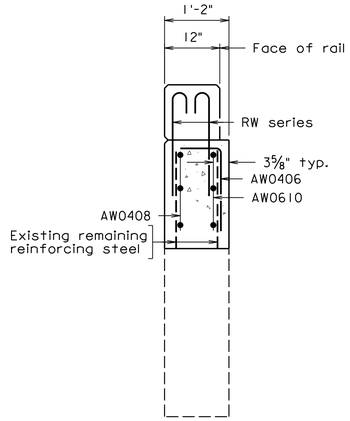

SECTION I-I
Scale: ¾" = 1'-0"

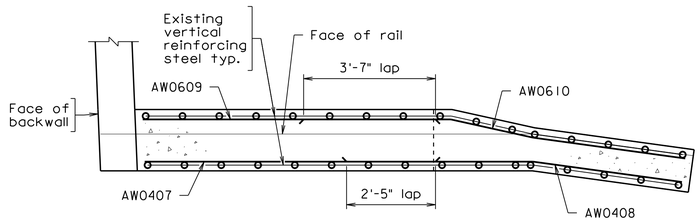

SECTION J-J

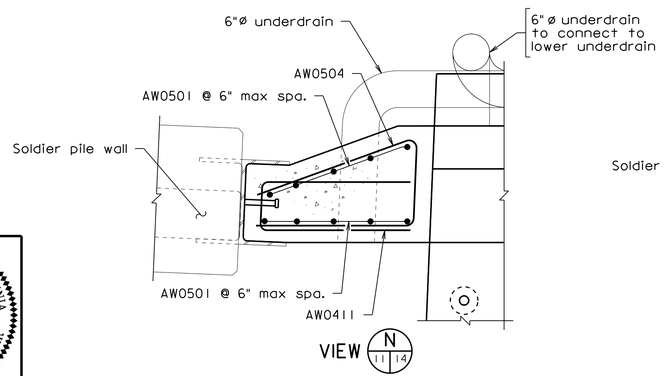

VIEW N (11 | 14)

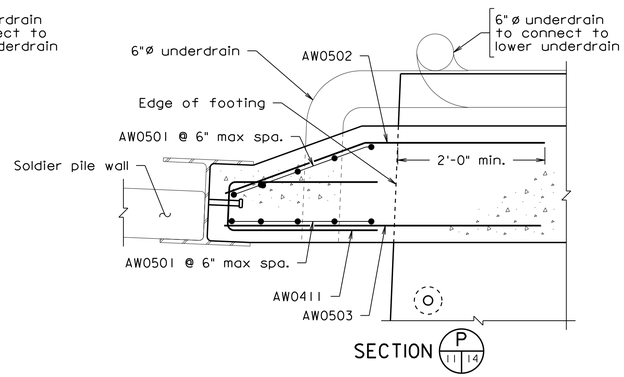

SECTION P (11 | 14)

SOLDIER PILE WALL CONNECTION DETAIL
Scale: 1" = 1'-0"

Notes:

For details of pedestrian fence, pedestal and handrail, see sheet 76.

For demolition limits of wingwall, see sheet 9.

For details of soldier pile wall, see sheets 117 thru 120.

257-38A_014.dgn

COMMONWEALTH OF VIRGINIA
JEREMY SCHLUSSEL
Lic. No. 033974
PROFESSIONAL ENGINEER

Jeremy Schlussel
2022.07.08 18:10:32 -04'00'

WHITMAN REQUARDT & ASSOCIATES
RICHMOND, VA
STRUCTURAL ENGINEER

Scale: ½" = 1'-0" unless otherwise noted.

© 2022, Commonwealth of Virginia

No.	Description	Date
	Revisions	

COMMONWEALTH OF VIRGINIA
DEPARTMENT OF TRANSPORTATION

STRUCTURE AND BRIDGE DIVISION

ABUTMENT A WINGWALLS

Designed: RDS	Date	Plan No.	Sheet No.
Drawn: MWL	July 2022	257-38A	14 of 125
Checked: SLH			

STATE	FEDERAL AID		STATE		SHEET NO.
	ROUTE	PROJECT	ROUTE	PROJECT	
VA.	—		95	0095-076-299, B688	15

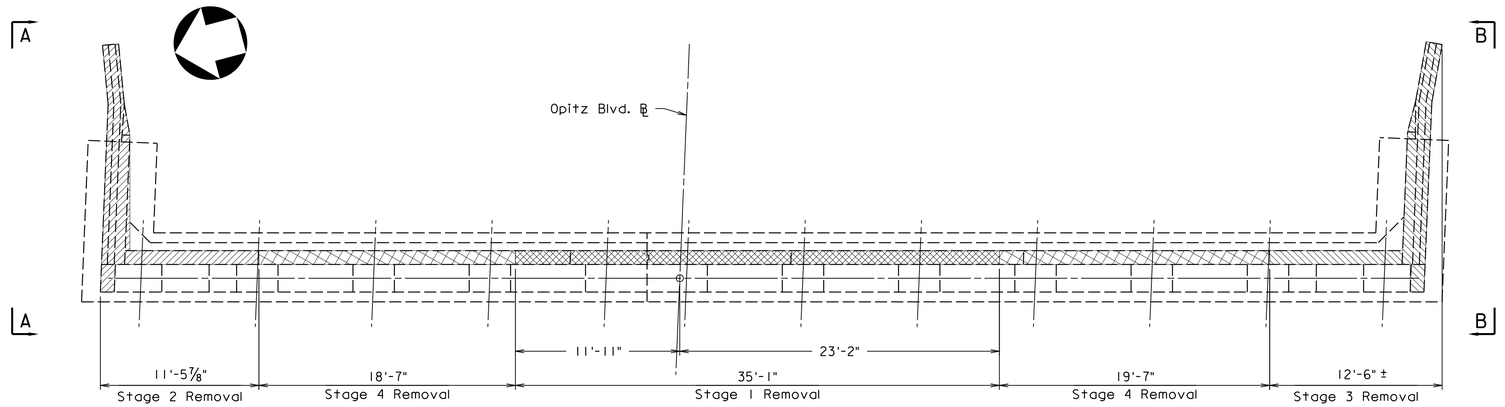

ABUTMENT B REMOVAL PLAN

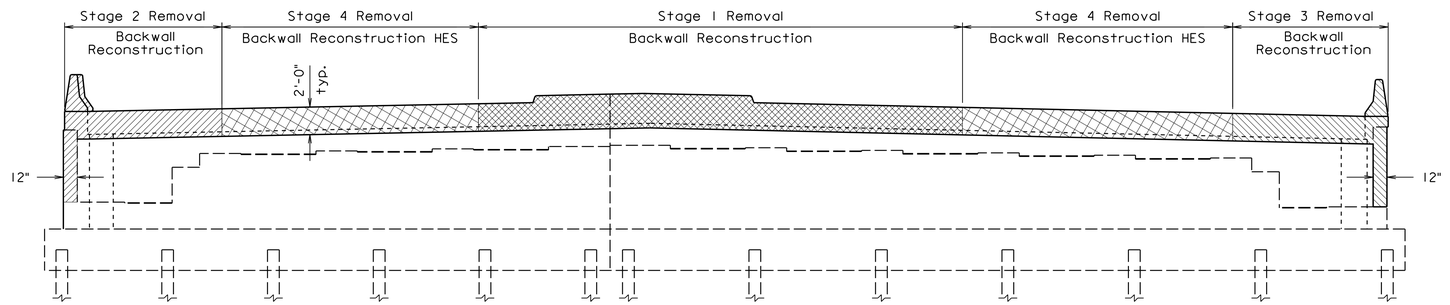

ABUTMENT B REMOVAL ELEVATION

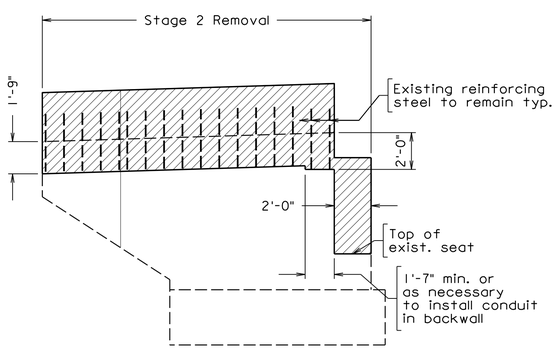

VIEW A-A
Scale: ¼" = 1'-0"

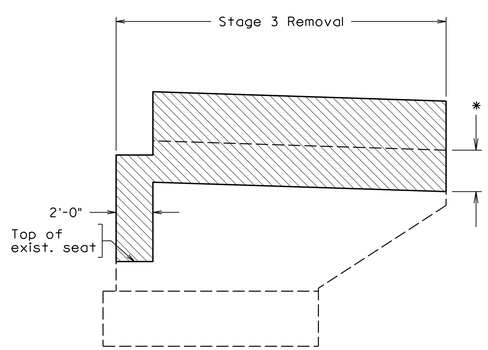

VIEW B-B
Scale: ¼" = 1'-0"

Notes:

Contractor shall take care not to damage portion of existing structure to remain in service.

Contractor shall provide a clean edge of demolition with a 1 inch deep saw cut.

* Wingwall removal may occur after abutment modifications to allow for temporary shoring. Wingwall shall be removed to a minimum of 3 feet below proposed top of ground.

For abutment modification details, see sheets 16, 17, 18, 19, and 20.

Legend:

- Denotes portion of existing structure to be removed during Stage 1
- Denotes portion of existing structure to be removed during Stage 2
- Denotes portion of existing structure to be removed during Stage 3
- Denotes portion of existing structure to be removed during Stage 4

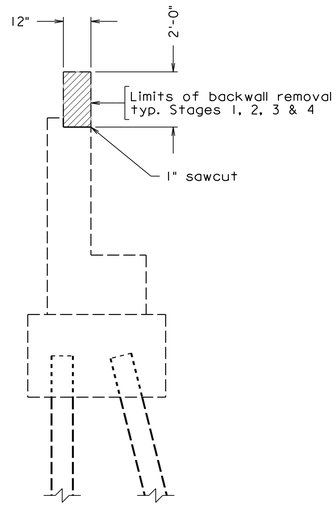

EXISTING ABUTMENT B SECTION
Scale: ⅜" = 1'-0"

Scale: 3/16" = 1'-0" unless otherwise noted.

© 2022, Commonwealth of Virginia

COMMONWEALTH OF VIRGINIA
JEREMY SCHLUSSEL
Lic. No. 033974
PROFESSIONAL ENGINEER

Jeremy Schlussel
2022.07.08 18:11:01 -04'00'

WHITMAN REQUARDT & ASSOCIATES
RICHMOND, VA
STRUCTURAL ENGINEER

No.	Description	Date
	Revisions	

COMMONWEALTH OF VIRGINIA
DEPARTMENT OF TRANSPORTATION

STRUCTURE AND BRIDGE DIVISION

ABUTMENT B REMOVAL

Designed: RDS	Date	Plan No.	Sheet No.
Drawn: MWL	July 2022	257-38A	15 of 125
Checked: SLH			

257-38A_015.dgn

STATE	FEDERAL AID		STATE		SHEET NO.
	ROUTE	PROJECT	ROUTE	PROJECT	
VA.	—		95	0095-076-299, B688	16

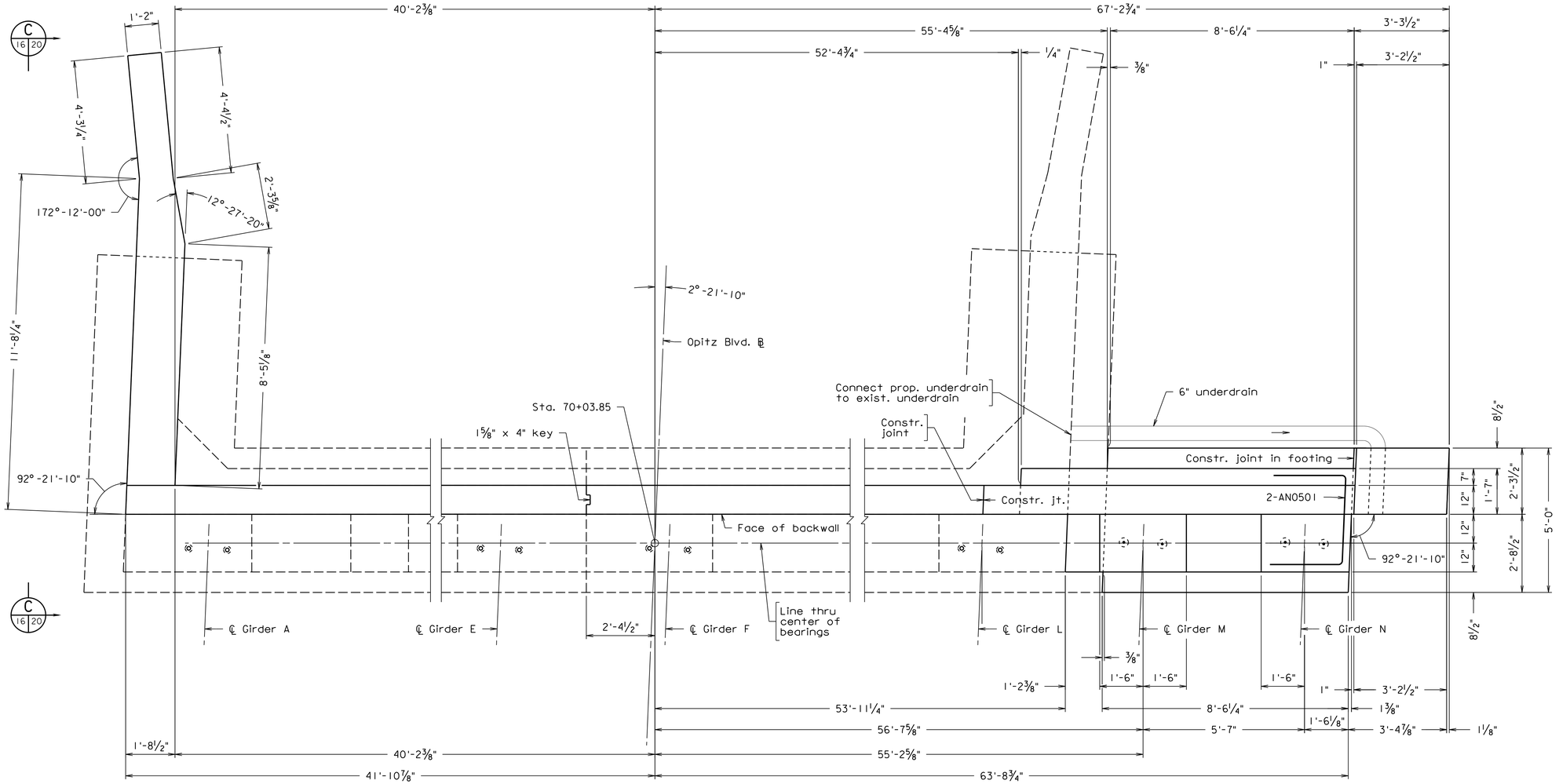

PLAN

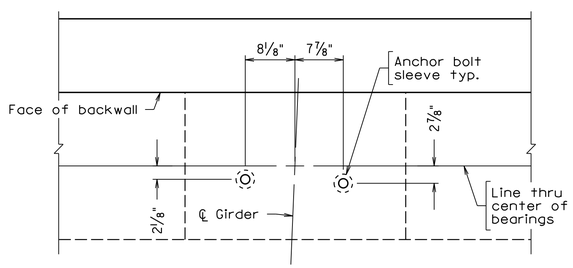

ANCHOR BOLT LAYOUT
GIRDERS A-L
Scale: 1" = 1'-0"

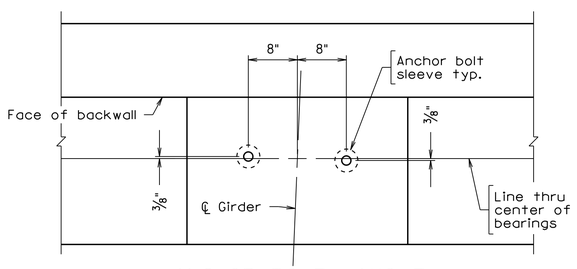

ANCHOR BOLT LAYOUT
GIRDERS M AND N
Scale: 1" = 1'-0"

Scale: 1/2" = 1'-0" unless otherwise noted.

Notes:

For elevation view, see sheet 17.

For pile layout and footing plan, see sheet 18.

For typical section, see sheet 19.

For wingwall details, see sheet 20.

For anchor bolt sleeve details see bearing details on sheet 35.

COMMONWEALTH OF VIRGINIA
JEREMY SCHLUSSEL
Lic. No. 033974
PROFESSIONAL ENGINEER

Jeremy Schlussel
2022.07.08 18:11:22 -04'00'

WHITMAN REQUARDT & ASSOCIATES
RICHMOND, VA
STRUCTURAL ENGINEER

© 2022, Commonwealth of Virginia

No.	Description	Date
	Revisions	

COMMONWEALTH OF VIRGINIA
DEPARTMENT OF TRANSPORTATION

STRUCTURE AND BRIDGE DIVISION

ABUTMENT B
PLAN

Designed: RDS	Date	Plan No.	Sheet No.
Drawn: MW	July 2022	257-38A	16 of 125
Checked: SLH			

257-38A_016.dgn

STATE	FEDERAL AID		STATE		SHEET NO.
	ROUTE	PROJECT	ROUTE	PROJECT	
VA.	—		95	0095-076-299, B688	17

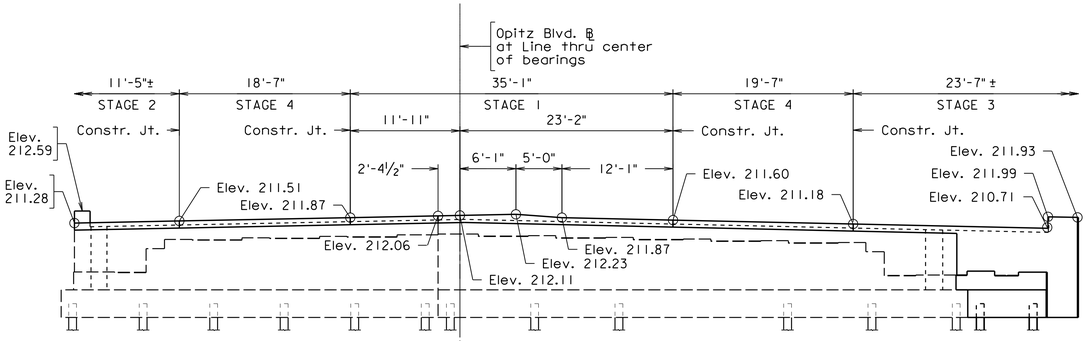

ABUTMENT BACKWALL CONSTRUCTION JOINT LOCATIONS AND ELEVATIONS

Scale: ⅛" = 1'-0"

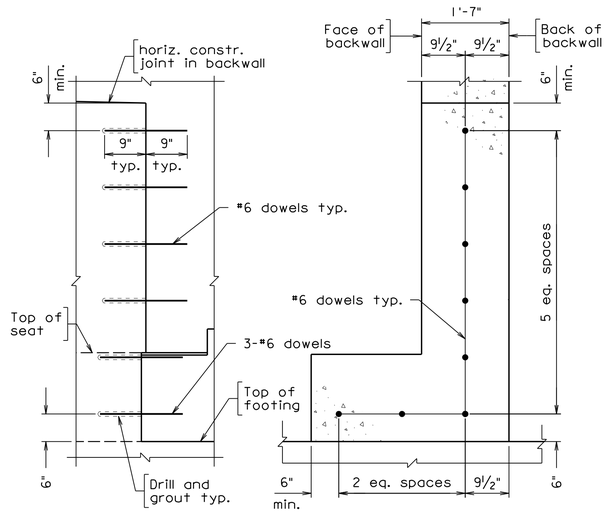

PART ELEVATION PART SECTION

BACKWALL DOWEL DETAIL

Scale: ¾" = 1'-0"

Notes:

* Proposed bottom of footing shall match existing bottom of footing.

Backwall construction joints shall be perpendicular to face of backwall.

Contractor shall install couplers or AH0604 coupler bars for AH0603 bars at any construction joint necessary for their means and methods to perform backwall reconstruction except at existing construction joint.

The number of AH0604 coupler bars shall be determined by Contractor and is not included in reinforcing steel schedule.

AH0603 bars shall be cut to length determined by Contractor's construction joint location.

For plan view, see sheet 16.

For pile layout and footing plan, see sheet 18.

For typical section, see sheet 19.

For Wingwall elevation View C and wingwall details, see sheet 20.

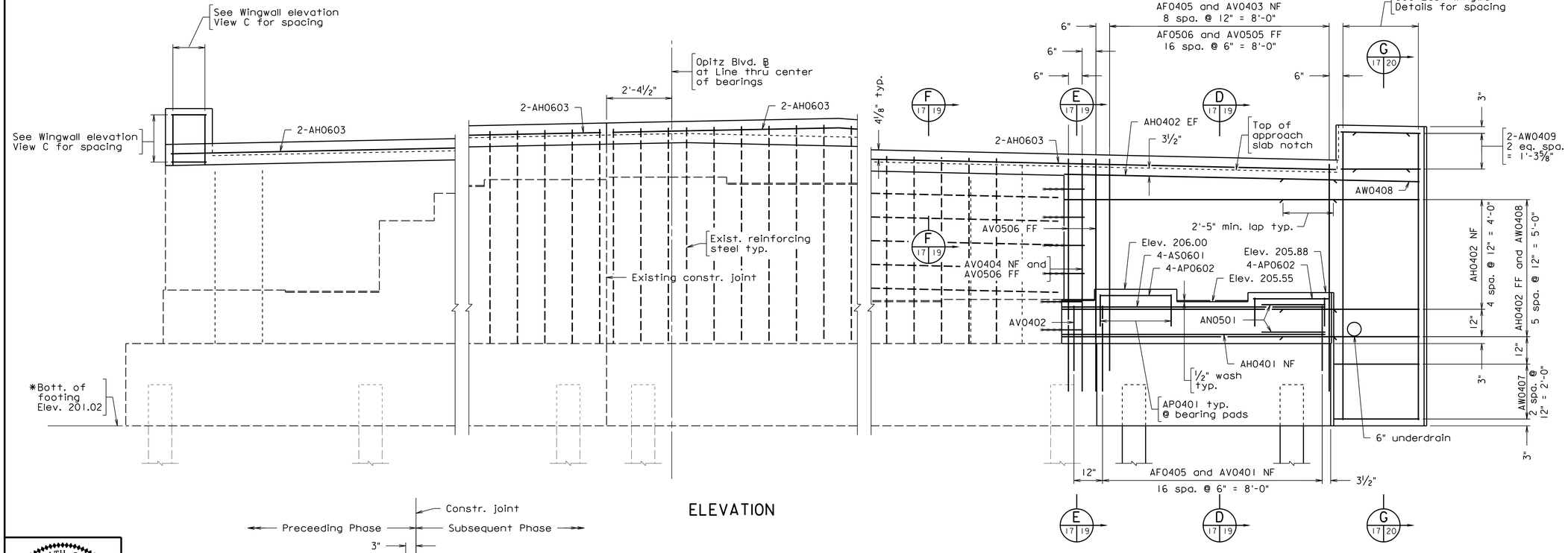

ELEVATION

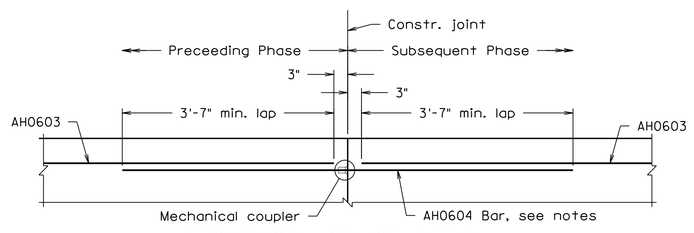

MECHANICAL SPLICE DETAIL

Not to scale

Scale: ½" = 1'-0" unless otherwise noted.

© 2022. Commonwealth of Virginia

COMMONWEALTH OF VIRGINIA
JEREMY SCHLUSSEL
Lic. No. 033974
PROFESSIONAL ENGINEER

Jeremy Schlussel
2022.07.08 18:09:48 -04'00'

WHITMAN REQUARDT & ASSOCIATES
RICHMOND, VA
STRUCTURAL ENGINEER

No.	Description	Date
	Revisions	

COMMONWEALTH OF VIRGINIA
DEPARTMENT OF TRANSPORTATION

STRUCTURE AND BRIDGE DIVISION

ABUTMENT B ELEVATION

Designed: RDS	Date	Plan No.	Sheet No.
Drawn: MWL	July 2022	257-38A	17 of 125
Checked: SLH			

257-38A_017.dgn

STATE	FEDERAL AID		STATE		SHEET NO.
	ROUTE	PROJECT	ROUTE	PROJECT	
VA.	—		95	0095-076-299, B688	18

PILE DATA TABLE

Nominal Axial Resistance Measured During Driving (Tons/pile)	Factored Axial Resistance (Tons/pile)	Estimated Tip Elevation	Minimum Tip Elevation
192	125	151	160

The Strength Limit State controls the pile design.

Notes:

For Abutment B typical sections, see sheet 19.

The joining of new and existing concrete abutment footing shall be in accordance with Section 412 of the VDOT Standard Specifications. Grout for drilled in dowels shall conform to Section 218 of the VDOT Standard Specifications.

The one required test pile and dynamic pile test are required to be done prior to driving any other permanent piling within the same substructure unit.

For installation of piles near existing footing, additional length of pile may be required to clear existing footing. Additonal length is not included in the estimated quantities.

Legend:

↓ Denotes direction of 3:12 batter.

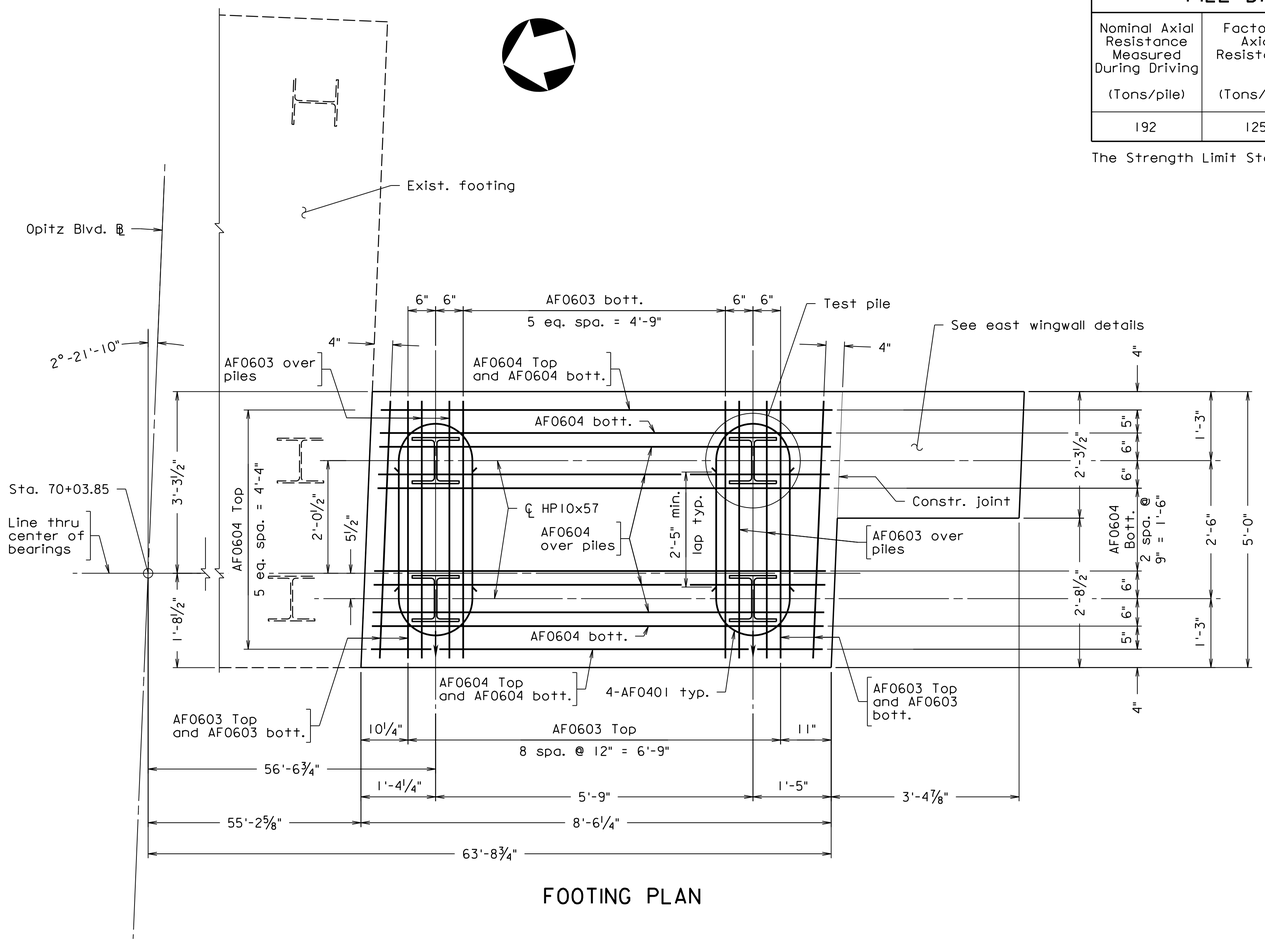

FOOTING PLAN

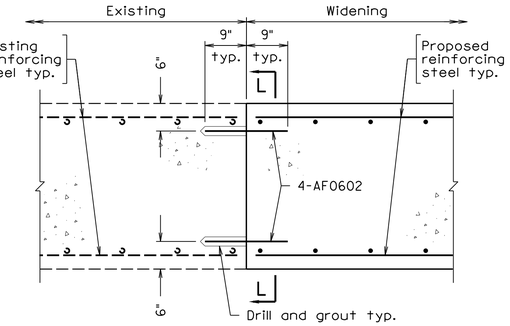

DOWEL BAR DETAIL

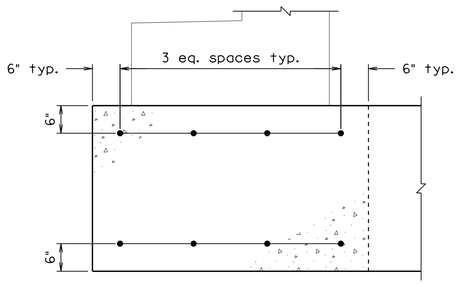

SECTION L-L
Scale: ¾" = 1'-0"
Footing reinforcing steel not shown for clarity.

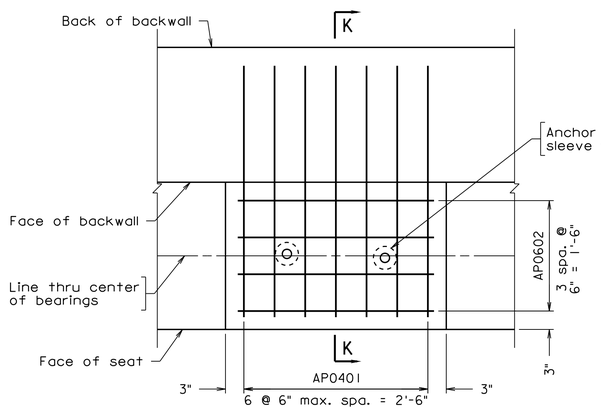

TYPICAL BEARING PAD PLAN
Scale: 1" = 1'-0"

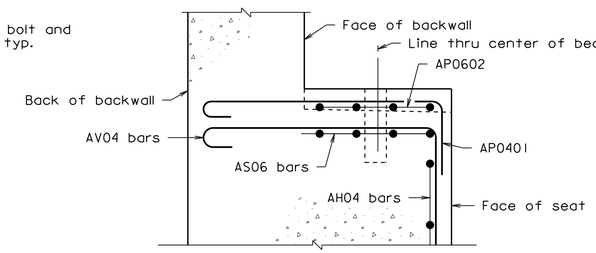

SECTION K-K
Not to scale
Backwall reinforcing steel not shown for clarity.

AP0401 and AP0602 bar spacing may be adjusted where required to clear anchor bolt sleeves.

Scale: ¾" = 1'-0" unless otherwise noted.

© 2022, Commonwealth of Virginia

257-38A_018.dgn

COMMONWEALTH OF VIRGINIA
JEFFREY S. BASFORD
Lic. No. 043143
PROFESSIONAL ENGINEER
Jeffrey S Basford
2022.07.08 18:01:59 -04'00'
WHITMAN REQUARDT & ASSOCIATES
RICHMOND, VA
GEOTECHNICAL ENGINEER
WHITMAN REQUARDT & ASSOCIATES
RICHMOND, VA
STRUCTURAL ENGINEER

No.	Description	Date
Revisions		

COMMONWEALTH OF VIRGINIA
DEPARTMENT OF TRANSPORTATION
STRUCTURE AND BRIDGE DIVISION

ABUTMENT B
FOOTING PLAN AND PILE LAYOUT

Designed: RDS
Drawn: MWL
Checked: SLH

Date	Plan No.	Sheet No.
July 2022	257-38A	18 of 125

STATE	FEDERAL AID		STATE		SHEET NO.
	ROUTE	PROJECT	ROUTE	PROJECT	
VA.	—		95	0095-076-299, B688	19

Notes:

* AS0601 bar spacing may be adjusted where required to clear anchor bolt sleeves.

The 1½" expanded rubber joint filler shall extend the full length of the deck slab extension.

Geocomposite wall drain shall extend from approach slab notch or 3'-0" below finished grade down to underdrain.

6" diameter underdrain shall connect to existing underdrain and run along back of backwall at bottom of wall drain with 1% slope.

For demolition limits of backwall, see sheet 15.

For Virginia Micro Abutment Detail, see sheet 66.

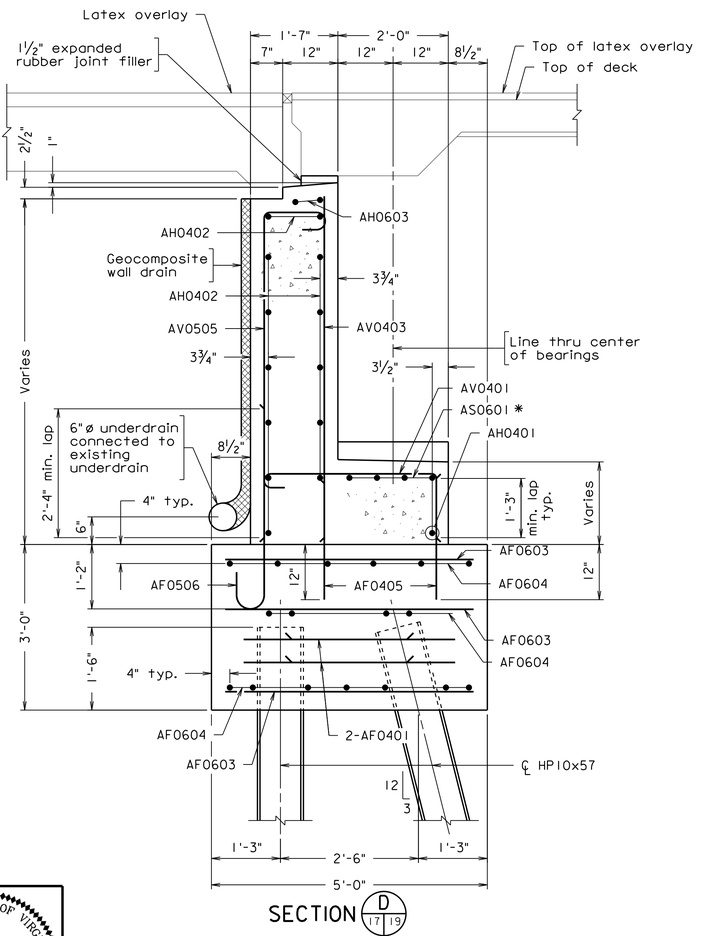

SECTION D 17 19

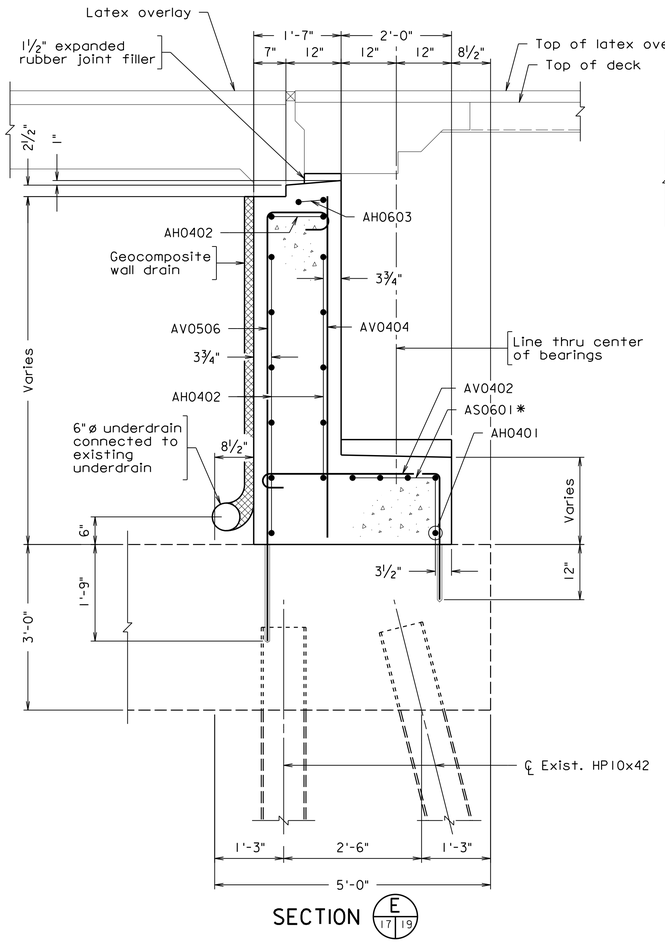

SECTION E 17 19

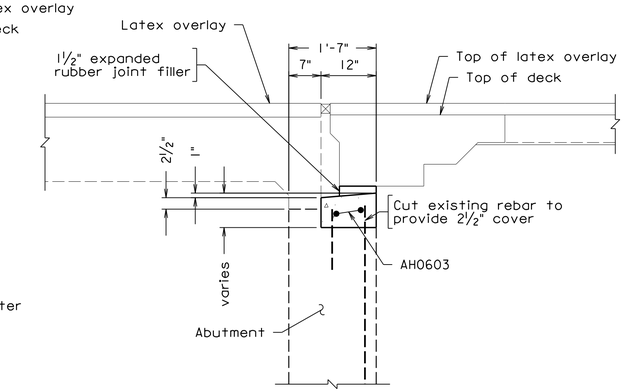

SECTION F 17 19

257-38A_019.dgn

JEREMY SCHLUSSEL
Lic. No. 033974
COMMONWEALTH OF VIRGINIA
PROFESSIONAL ENGINEER

Jeremy Schlussel
2022.07.08 18:08:58 -04'00'

WHITMAN REQUARDT & ASSOCIATES
RICHMOND, VA
STRUCTURAL ENGINEER

Scale: ¾" = 1'-0" unless otherwise noted.

© 2022. Commonwealth of Virginia

No.	Description	Date
	Revisions	

COMMONWEALTH OF VIRGINIA
DEPARTMENT OF TRANSPORTATION

STRUCTURE AND BRIDGE DIVISION

ABUTMENT B
TYPICAL SECTIONS

Designed: RDS	Date	Plan No.	Sheet No.
Drawn: MWL	July 2022	257-38A	19 of 125
Checked: SLH			

STATE	FEDERAL AID		STATE		SHEET NO.
	ROUTE	PROJECT	ROUTE	PROJECT	
VA.	—		95	0095-076-299, B688	20

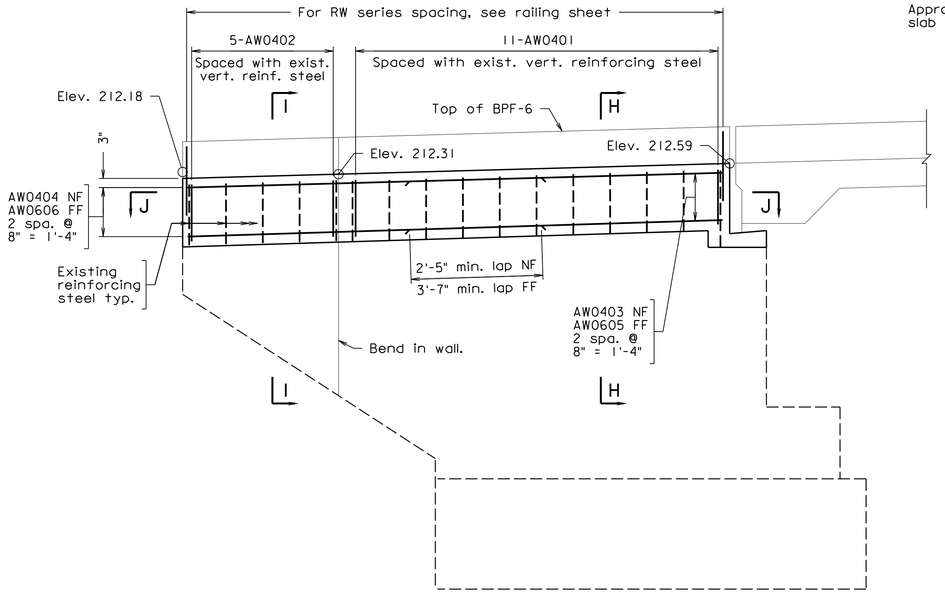

VIEW C (16|20)

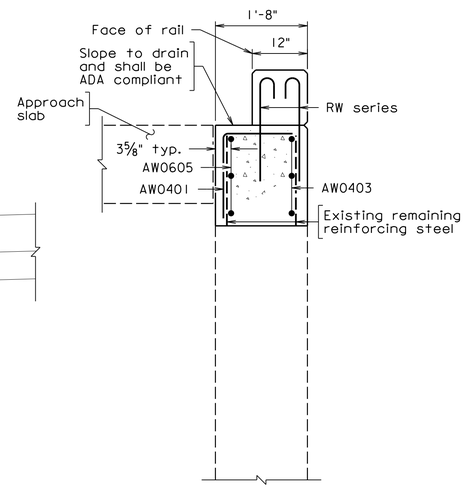

SECTION H-H
Scale: ¾" = 1'-0"

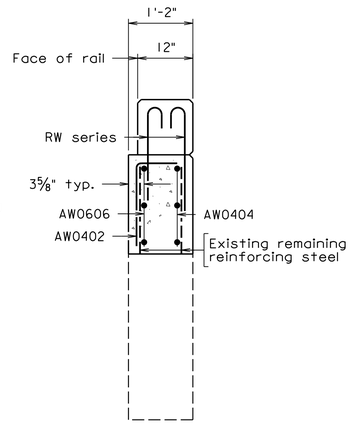

SECTION I-I
Scale: ¾" = 1'-0"

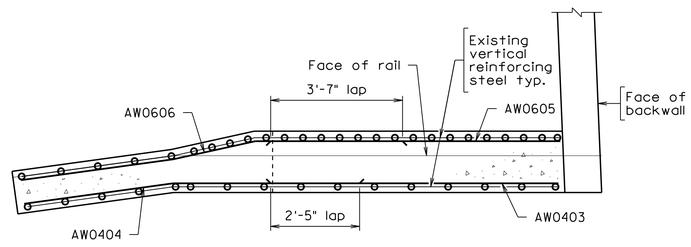

SECTION J-J

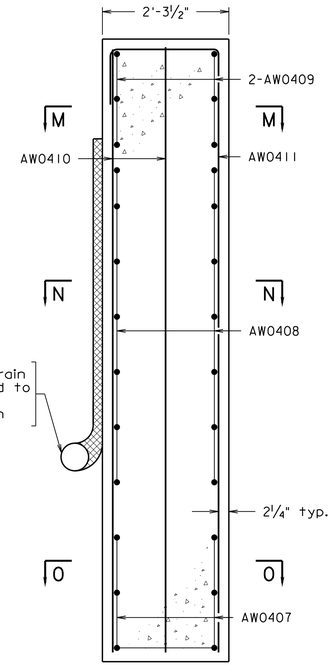

SECTION G (17|20)
Scale: ¾" = 1'-0"

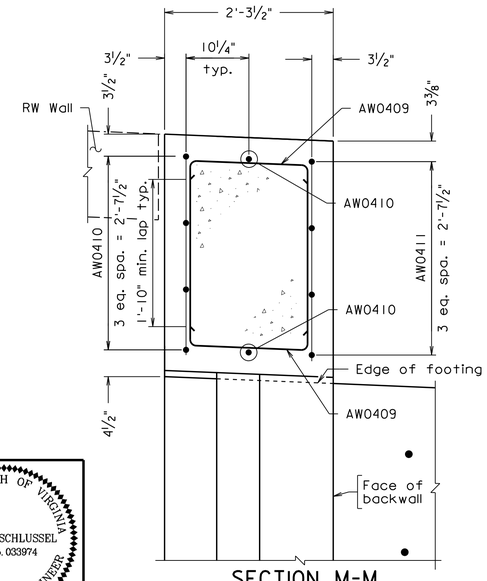

SECTION M-M
SOUTH WINGWALL
Scale: 1" = 1'-0"

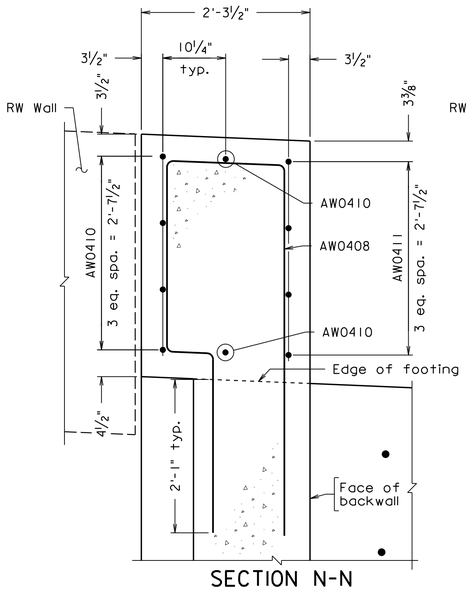

SECTION N-N
SOUTH WINGWALL
Scale: 1" = 1'-0"
Abutment backwall reinforcing steel not shown for clarity.

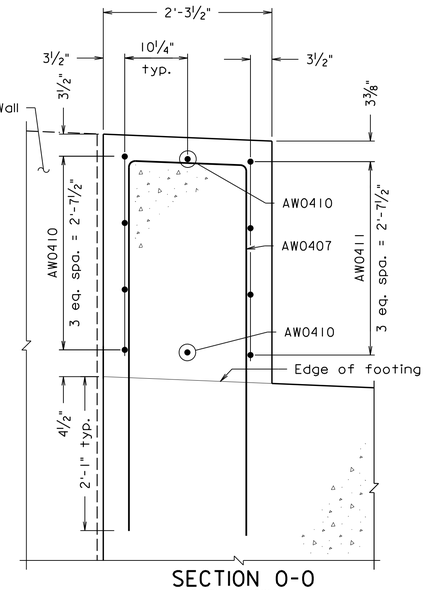

SECTION O-O
SOUTH WINGWALL
Scale: 1" = 1'-0"
Abutment footing reinforcing steel not shown for clarity.

Notes:

For details of pedestrian fence, pedestal and handrail, see sheet 76.

For demolition limits of wingwall, see sheet 15.

For RW wall details, see sheets 114-116.

Scale: ½" = 1'-0" unless otherwise noted.

© 2022, Commonwealth of Virginia

COMMONWEALTH OF VIRGINIA
JEREMY SCHLUSSEL
Lic. No. 033974
PROFESSIONAL ENGINEER

Jeremy Schlussel
2022.07.08 18:09:20 -04'00'

WHITMAN REQUARDT & ASSOCIATES
RICHMOND, VA
STRUCTURAL ENGINEER

No.	Description	Date
	Revisions	

COMMONWEALTH OF VIRGINIA
DEPARTMENT OF TRANSPORTATION

STRUCTURE AND BRIDGE DIVISION

ABUTMENT B WINGWALLS

Designed: RDS	Date	Plan No.	Sheet No.
Drawn: MW	July 2022	257-38A	20 of 125
Checked: SLH			

257-38A_020.dgn

STATE	FEDERAL AID		STATE		SHEET NO.
	ROUTE	PROJECT	ROUTE	PROJECT	
VA.	—		95	0095-076-299, B688	21

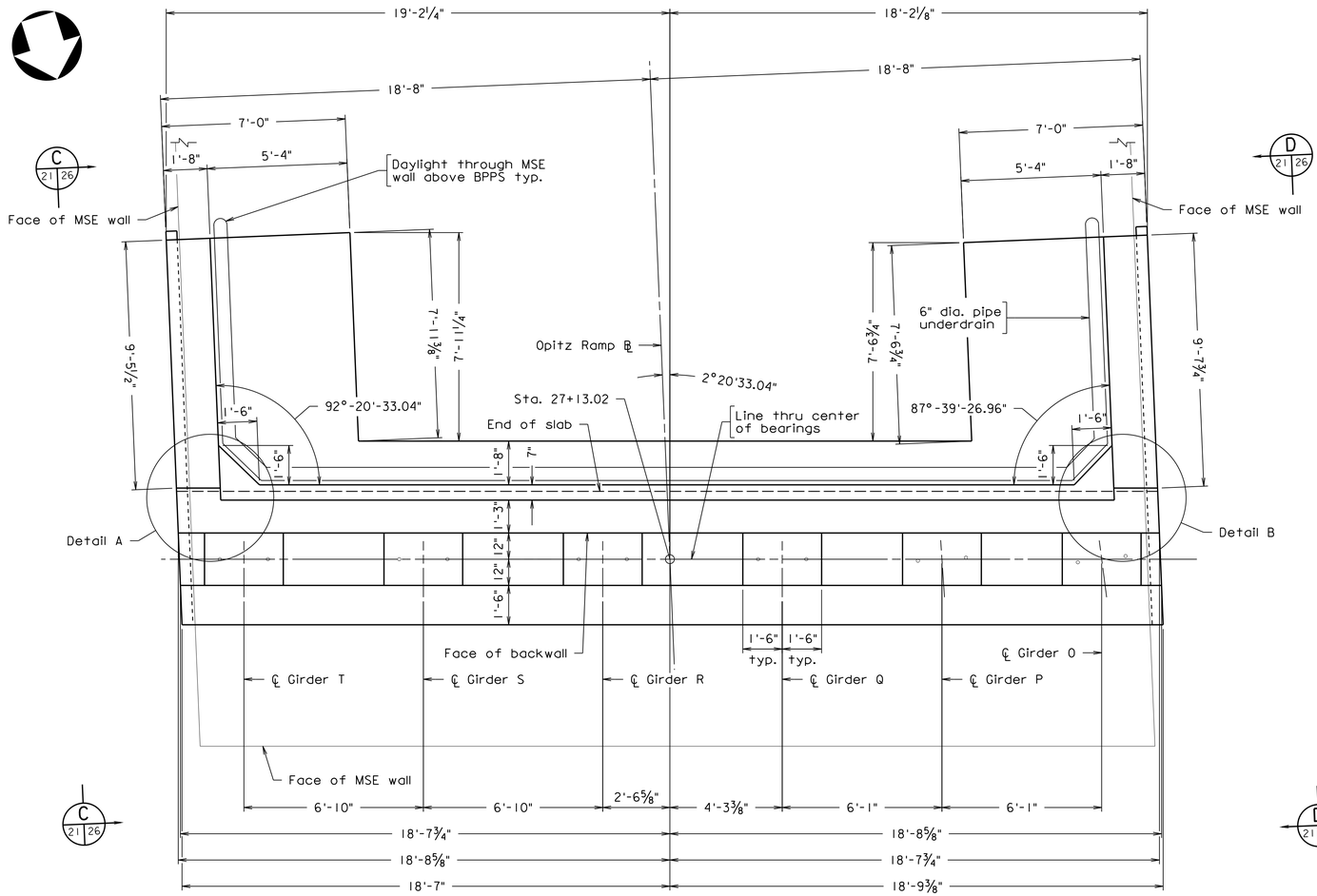

PLAN

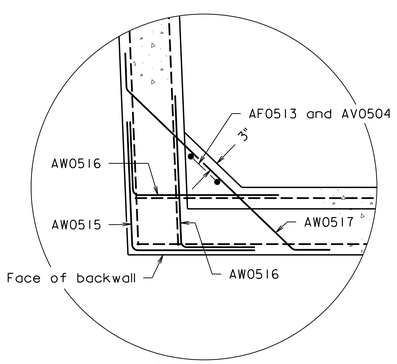

DETAIL A

Scale: ½" = 1'-0"

Additional backwall and wingwall reinforcing steel not shown for clarity.

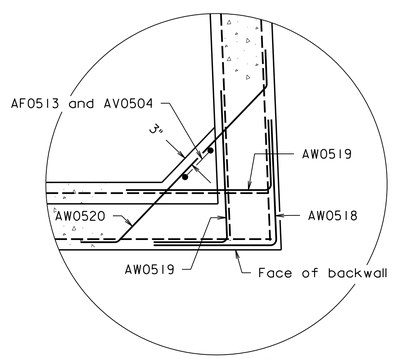

DETAIL B

Scale: ½" = 1'-0"

Additional backwall and wingwall reinforcing steel not shown for clarity.

Notes:

For elevation view and typical seat reinforcement, see sheet 22.

For pile layout, see sheet 23.

For Footing Plan, see sheet 24.

For typical section, see sheet 25.

For anchor bolt sleeve details, see bearing details on sheet 33.

For details of deck slab extension, see sheet 67.

For details of MSE wall, see sheets 121 thru 125.

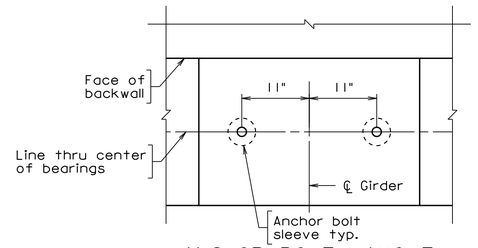

ANCHOR BOLT LAYOUT
GIRDERS Q, R, S, AND T

Scale: 1" = 1'-0"

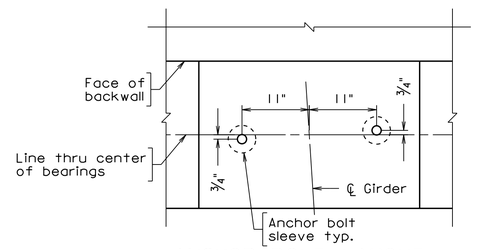

ANCHOR BOLT LAYOUT
GIRDER P

Scale: 1" = 1'-0"

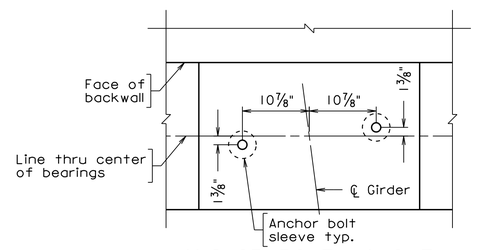

ANCHOR BOLT LAYOUT
GIRDER O

Scale: 1" = 1'-0"

Scale: ⅜" = 1'-0" unless otherwise noted.

© 2022, Commonwealth of Virginia

COMMONWEALTH OF VIRGINIA
JEREMY SCHLUSSEL
Lic. No. 033974
PROFESSIONAL ENGINEER

Jeremy Schlussel
2022.07.08 18:08:06 -04'00'

WHITMAN REQUARDT & ASSOCIATES
RICHMOND, VA
STRUCTURAL ENGINEER

No.	Description	Date
	Revisions	

COMMONWEALTH OF VIRGINIA
DEPARTMENT OF TRANSPORTATION

STRUCTURE AND BRIDGE DIVISION

ABUTMENT C
PLAN

Designed: RDS	Date	Plan No.	Sheet No.
Drawn: CRR	July 2022	257-38A	21 of 125
Checked: SLH			

257-38A_021.dgn

STATE	FEDERAL AID		STATE		SHEET NO.
	ROUTE	PROJECT	ROUTE	PROJECT	
VA.	—		95	0095-076-299, B688	22

Notes:

For plan view, see sheet 21.

For pile layout and footing plan, see sheet 23.

For footing plan, see sheet 24.

For typical section, see sheet 25.

For wingwall details, see sheet 26.

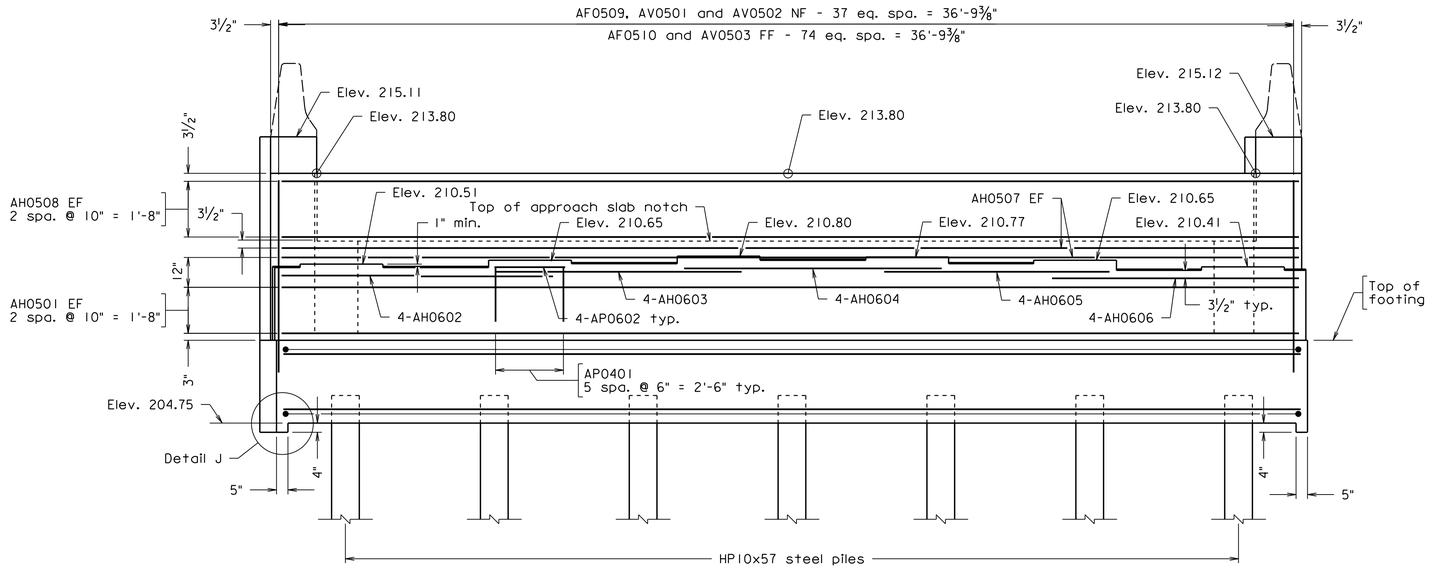

ELEVATION

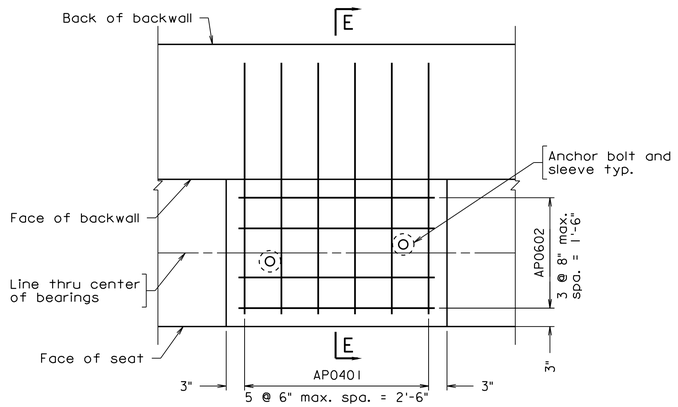

TYPICAL BEARING PAD PLAN

Scale: 1" = 1'-0"

AP0401 and AP0602 bar spacing may be adjusted where required to clear anchor bolt sleeves.

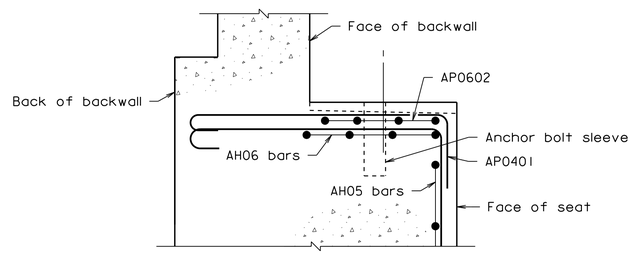

SECTION E-E

Not to scale

Backwall reinforcing steel not shown for clarity.

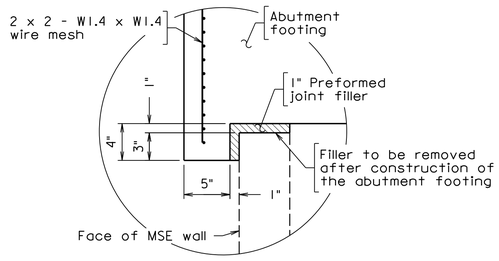

DETAIL J

Scale: 1½" = 1'-0"

257-38A_022.dgn

COMMONWEALTH OF VIRGINIA
JEREMY SCHLUSSEL
Lic. No. 033974
PROFESSIONAL ENGINEER

Jeremy Schlussel
2022.07.08 18:07:42 -04'00'

WHITMAN REQUARDT & ASSOCIATES
RICHMOND, VA
STRUCTURAL ENGINEER

Scale: ⅜" = 1'-0" unless otherwise noted.

© 2022, Commonwealth of Virginia

No.	Description	Date
	Revisions	

COMMONWEALTH OF VIRGINIA
DEPARTMENT OF TRANSPORTATION

STRUCTURE AND BRIDGE DIVISION

ABUTMENT C ELEVATION

Designed: RDS	Date	Plan No.	Sheet No.
Drawn: CRR	July 2022	257-38A	22 of 125
Checked: SLH			

STATE	FEDERAL AID		STATE		SHEET NO.
	ROUTE	PROJECT	ROUTE	PROJECT	
VA.	—		95	0095-076-299, B688	23

Notes:

The one required test pile and dynamic pile test are required to be done prior to driving any other permanent piling within the same substructure unit.

For Footing Plan showing the top mat of rebar, see sheet 24.

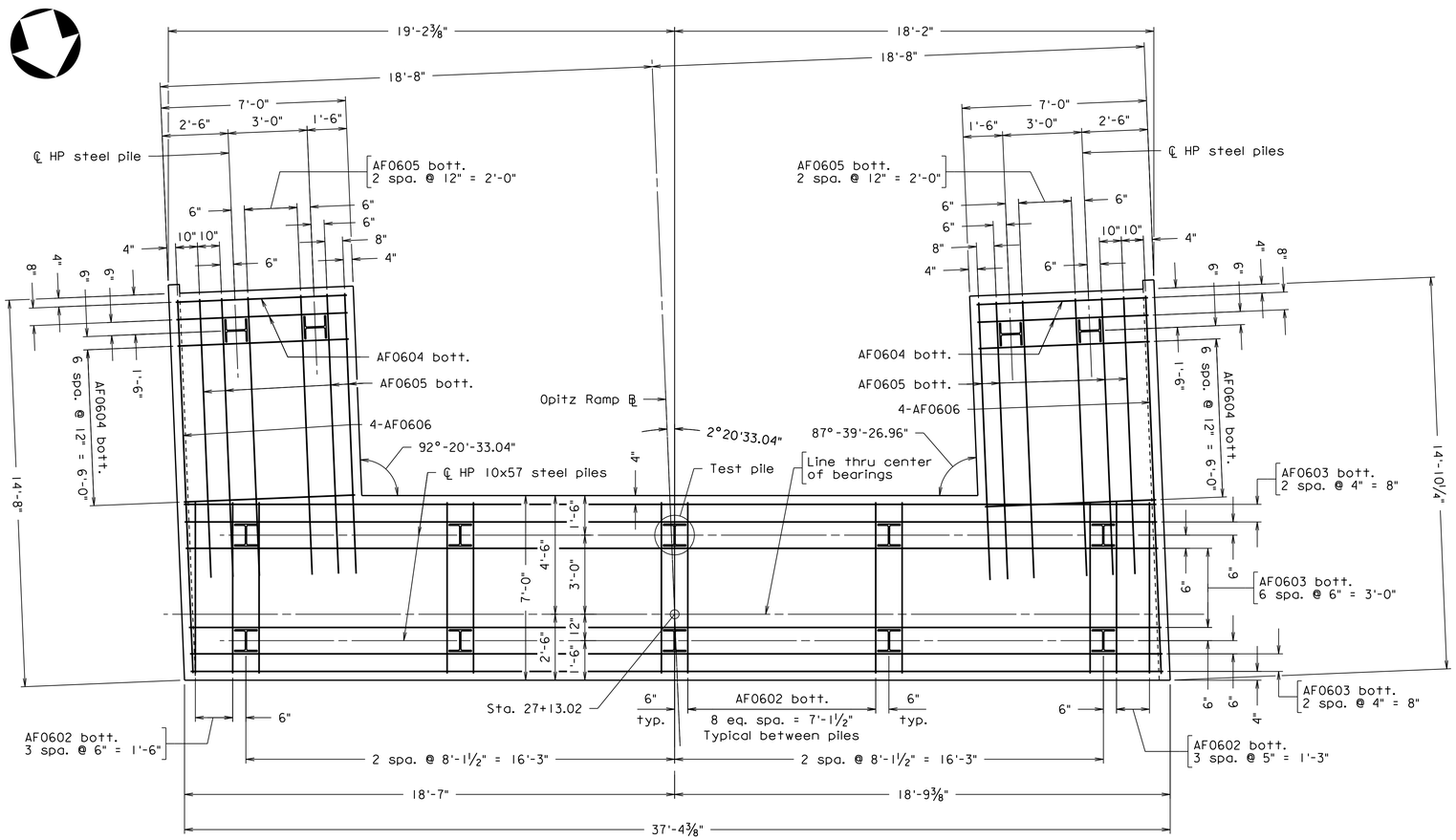

PILE LAYOUT

Showing pile layout and bottom mat of reinforcing steel only.

PILE DATA TABLE			
Nominal Axial Resistance Measured During Driving (Tons/pile)	Factored Axial Resistance (Tons/pile)	Estimated Tip Elevation	Minimum Tip Elevation
192	125	141	157

The Strength Limit State controls the pile design.

257-38A_023.dgn

COMMONWEALTH OF VIRGINIA
JEFFREY S. BASFORD
Lic. No. 043143
PROFESSIONAL ENGINEER

Jeffrey S Basford
2022.07.08 18:03:24 -04'00'

WHITMAN REQUARDT & ASSOCIATES
RICHMOND, VA
GEOTECHNICAL ENGINEER

COMMONWEALTH OF VIRGINIA
JEREMY SCHLUSSEL
Lic. No. 033974
PROFESSIONAL ENGINEER

Jeremy Schlussel
2022.07.08 19:11:48 -04'00'

WHITMAN REQUARDT & ASSOCIATES
RICHMOND, VA
STRUCTURAL ENGINEER

Scale: ⅜" = 1'-0" unless otherwise noted.

© 2022, Commonwealth of Virginia

No.	Description	Date
	Revisions	

COMMONWEALTH OF VIRGINIA
DEPARTMENT OF TRANSPORTATION

STRUCTURE AND BRIDGE DIVISION

ABUTMENT C
FOOTING PLAN AND PILE LAYOUT

Designed: RDS	Date	Plan No.	Sheet No.
Drawn: CRR	July 2022	257-38A	23 of 125
Checked: SLH			

STATE	FEDERAL AID		STATE		SHEET NO.
	ROUTE	PROJECT	ROUTE	PROJECT	
VA.	—		95	0095-076-299, B688	24

Notes:

For Pile Layout showing the bottom mat of rebar, see sheet 23.

For Abutment C typical section, see sheet 25.

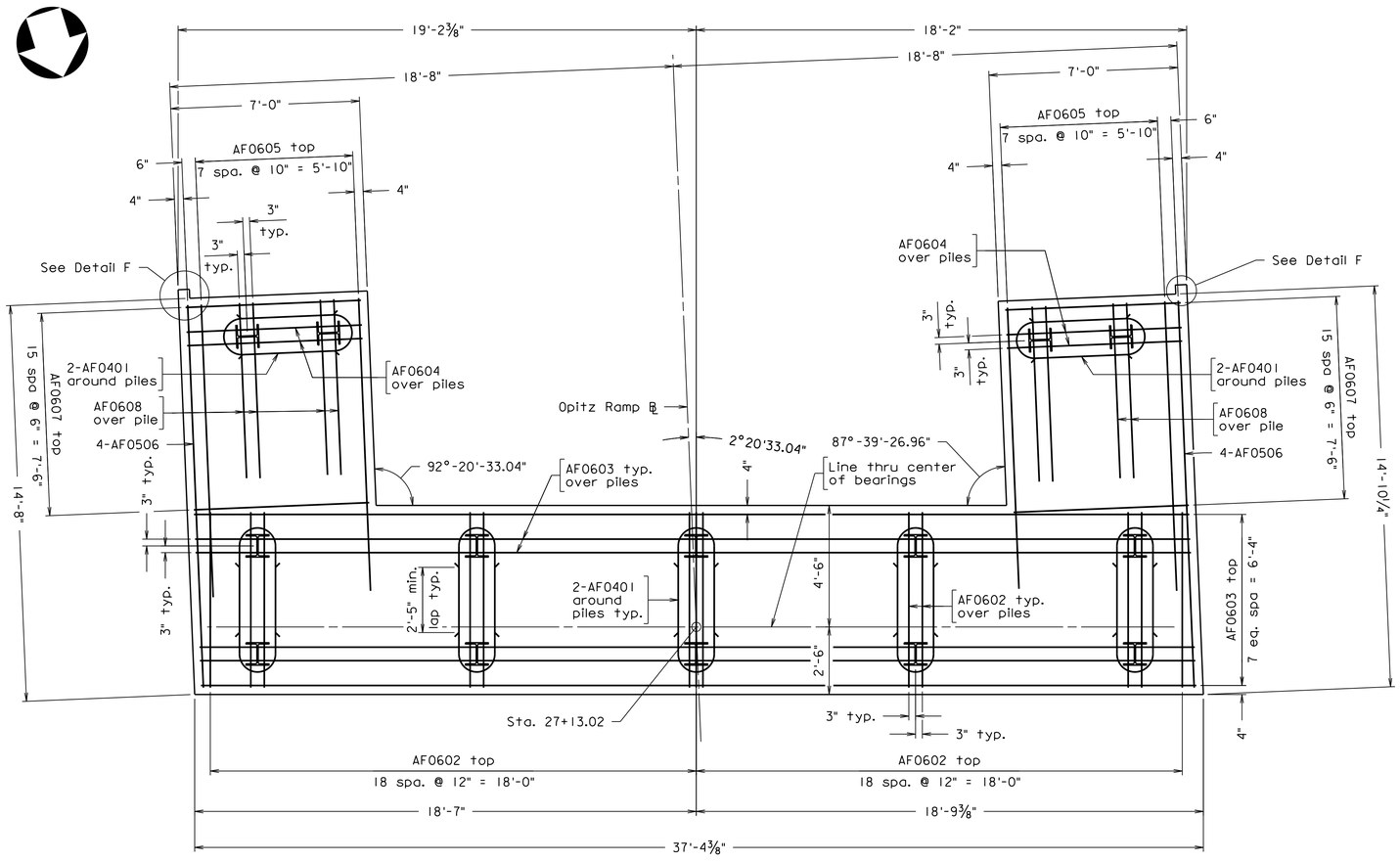

FOOTING PLAN

Showing reinforcing steel at piles and top mat of reinforcing steel only.

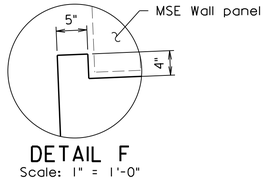

DETAIL F

Scale: 1" = 1'-0"

Scale: ⅜" = 1'-0" unless otherwise noted.

© 2022, Commonwealth of Virginia

COMMONWEALTH OF VIRGINIA
JEREMY SCHLUSSEL
Lic. No. 033974
PROFESSIONAL ENGINEER

Jeremy Schlussel
2022.07.08 18:07:21 -04'00'

WHITMAN REQUARDT & ASSOCIATES
RICHMOND, VA
STRUCTURAL ENGINEER

No.	Description	Date
	Revisions	

COMMONWEALTH OF VIRGINIA
DEPARTMENT OF TRANSPORTATION

STRUCTURE AND BRIDGE DIVISION

ABUTMENT C
FOOTING PLAN

Designed: RDS	Date	Plan No.	Sheet No.
Drawn: CRR	July 2022	257-38A	24 of 125
Checked: SLH			

257-38A_024.dgn

STATE	FEDERAL AID		STATE		SHEET NO.
	ROUTE	PROJECT	ROUTE	PROJECT	
VA.	—		95	0095-076-299, B688	25

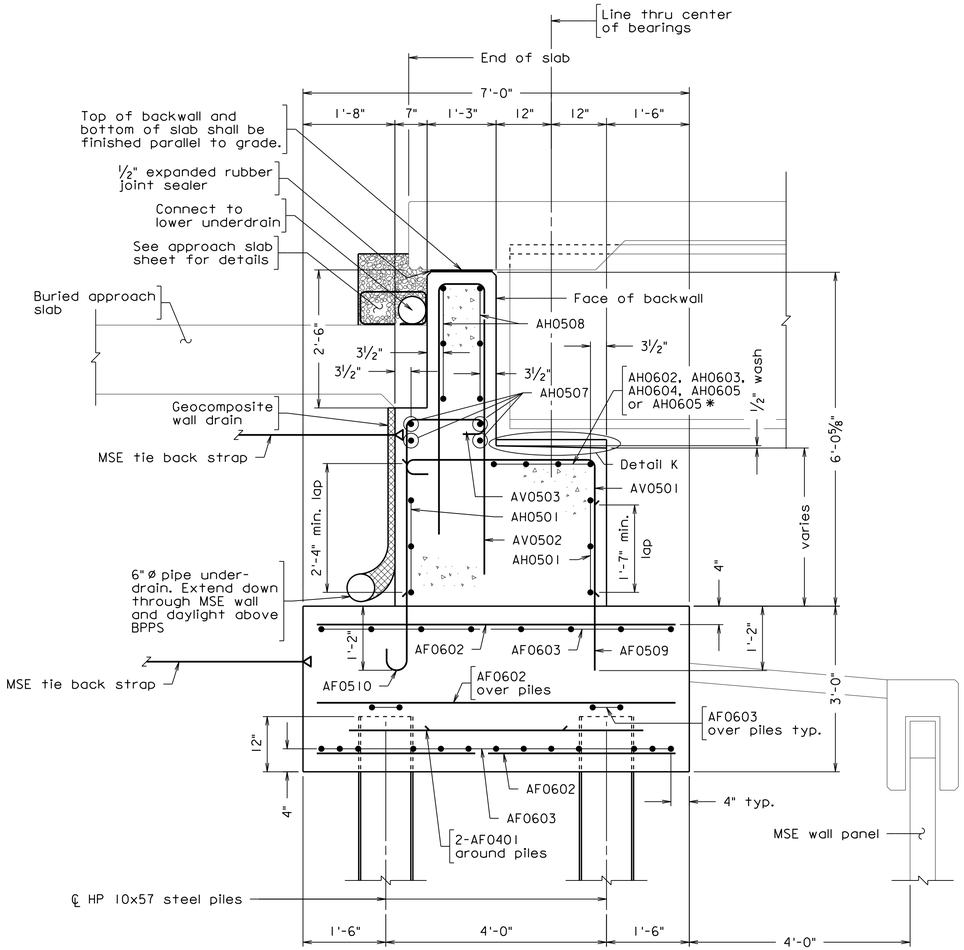

TYPICAL SECTION

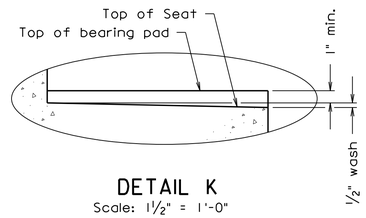

DETAIL K
Scale: 1½" = 1'-0"

Notes:

* AH06 bar spacing may be adjusted where required to clear anchor bolt sleeves.

For details of deck slab extension, see sheet 67.

Abutment MSE straps shall be designed for the following factored loads:

1.04 kips/ft of soil pressure and 3.00 kips/ft of additional longitudinal loads along the length of the abutment wall.

257-38A_025.dgn

COMMONWEALTH OF VIRGINIA
JEREMY SCHLUSSEL
Lic. No. 033974
PROFESSIONAL ENGINEER

Jeremy Schlussel
2022.07.08 18:06:59 -04'00'

WHITMAN REQUARDT & ASSOCIATES
RICHMOND, VA
STRUCTURAL ENGINEER

Scale: ¾" = 1'-0" unless otherwise noted.

© 2022. Commonwealth of Virginia

No.	Description	Date
	Revisions	

COMMONWEALTH OF VIRGINIA
DEPARTMENT OF TRANSPORTATION

STRUCTURE AND BRIDGE DIVISION

ABUTMENT C
SECTIONS AND DETAILS

Designed: RDS	Date	Plan No.	Sheet No.
Drawn: CRR	July 2022	257-38A	25 of 125
Checked: JLH			

STATE	FEDERAL AID		STATE		SHEET NO.
	ROUTE	PROJECT	ROUTE	PROJECT	
VA.	—		95	0095-076-299, B688	26

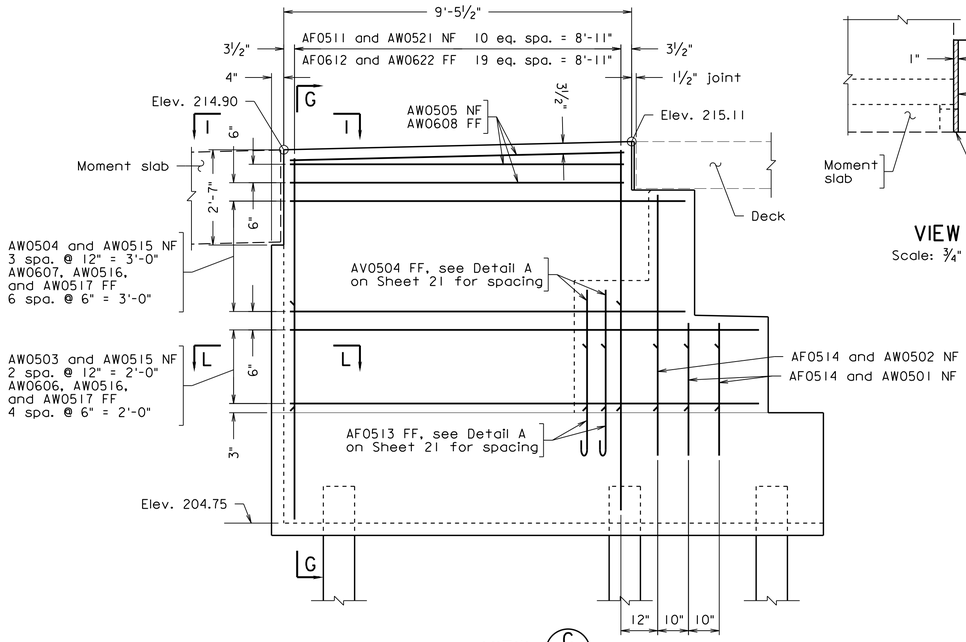

VIEW C (21 | 26)

Footing reinforcing not shown

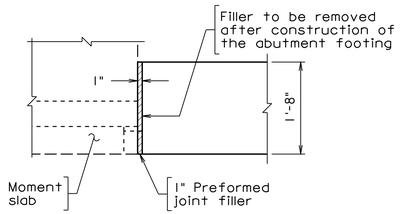

VIEW I-I

Scale: ¾" = 1'-0"

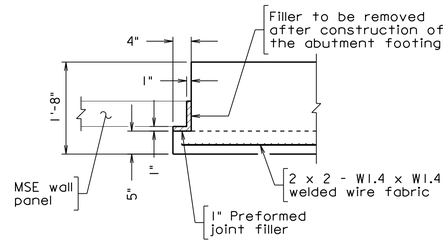

SECTION L-L

Scale: ¾" = 1'-0"

Notes:

For joint details, see sheet 75.

For details of footing, see sheets 23 and 24.

For parapet details, see sheet 82.

Wingwall MSE straps shall be designed for the following factored loads:

2.64 kips/ft of soil pressure and 1.73 kips/ft of additional longitudinal loads along the length of the wingwall.

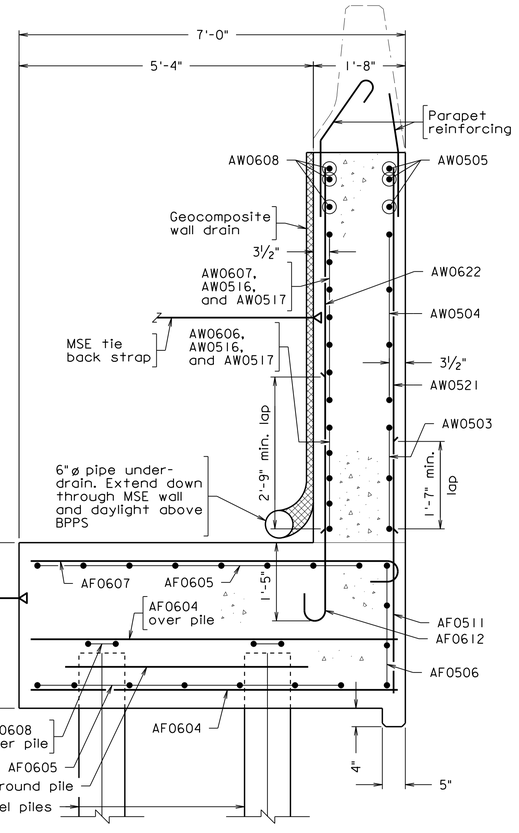

SECTION G-G

Scale: ¾" = 1'-0"

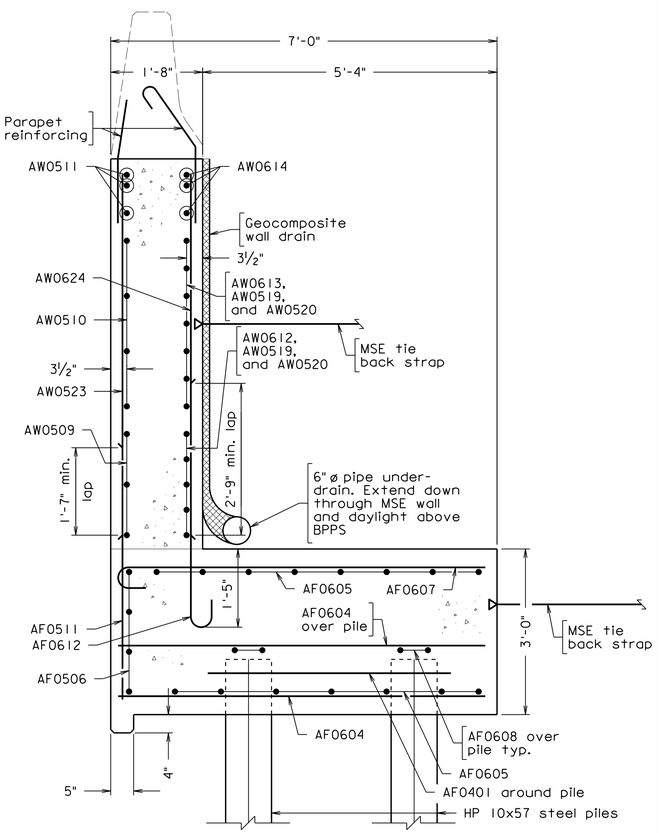

SECTION H-H

Scale: ¾" = 1'-0"

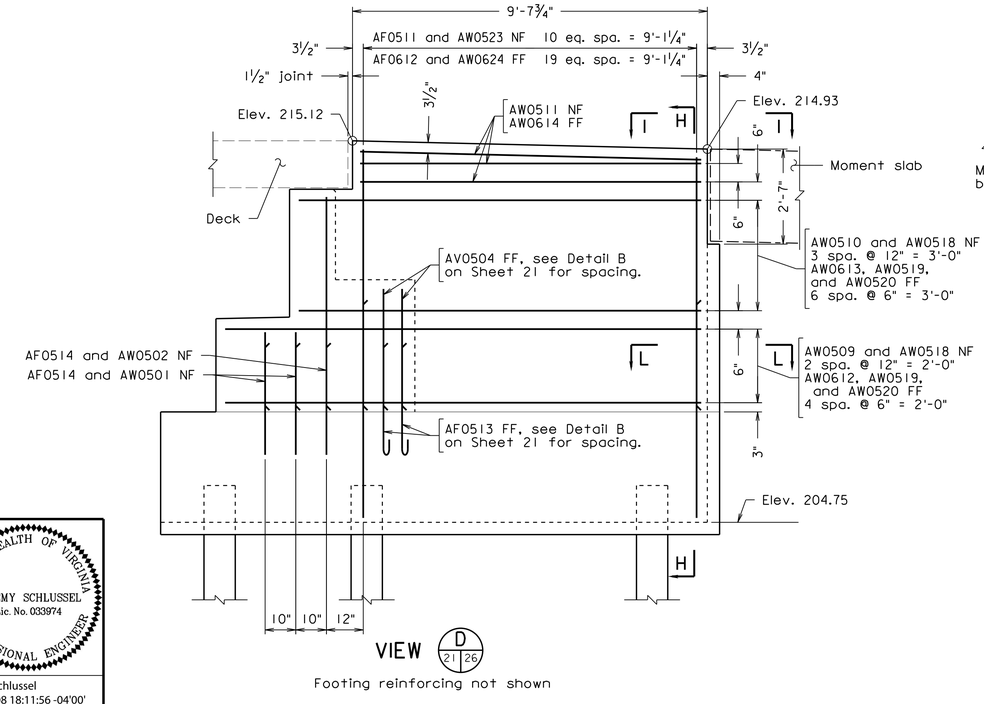

VIEW D (21 | 26)

Footing reinforcing not shown

257-38A_026.dgn

COMMONWEALTH OF VIRGINIA
JEREMY SCHLUSSEL
Lic. No. 033974
PROFESSIONAL ENGINEER

Jeremy Schlussel
2022.07.08 18:11:56 -04'00'

WHITMAN REQUARDT & ASSOCIATES
RICHMOND, VA
STRUCTURAL ENGINEER

Scale: ½" = 1'-0" unless otherwise noted.

© 2022, Commonwealth of Virginia

No.	Description	Date
	Revisions	

COMMONWEALTH OF VIRGINIA
DEPARTMENT OF TRANSPORTATION

STRUCTURE AND BRIDGE DIVISION

ABUTMENT C
WINGWALLS

Designed: RDS	Date	Plan No.	Sheet No.
Drawn: CRR	July 2022	257-38A	26 of 125
Checked: SLH			

STATE	FEDERAL AID		STATE		SHEET NO.
	ROUTE	PROJECT	ROUTE	PROJECT	
VA.	—		95	0095-076-299, B688	27

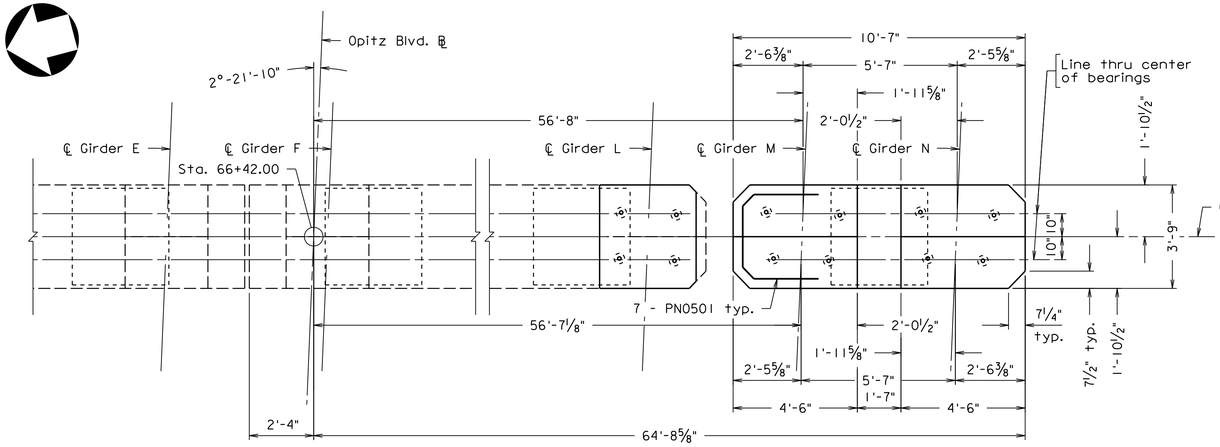

PLAN

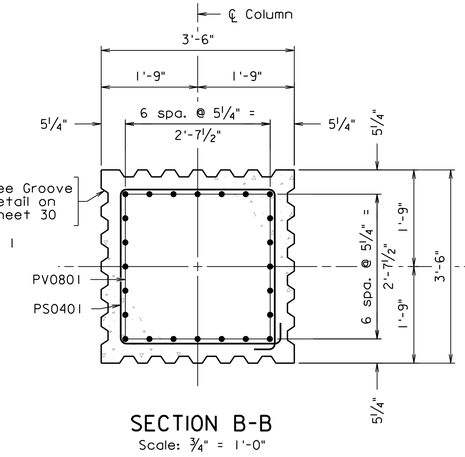

SECTION B-B
Scale: ¾" = 1'-0"

Notes:

For spacing of PF08 series bars, see footing plan on sheet 30.

For anchor bolt layout, see sheet 30.

For Beam seat modification details, see sheet 31.

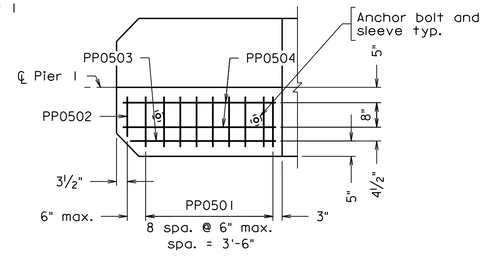

TYPICAL SEAT REINFORCING STEEL PLAN

Seat for Girder M shown, Seat for Girder N similar opposite hand.

Scale: ½" = 1'-0"

PP05 bar spacing may be adjusted where required to clear anchor bolt sleeves.

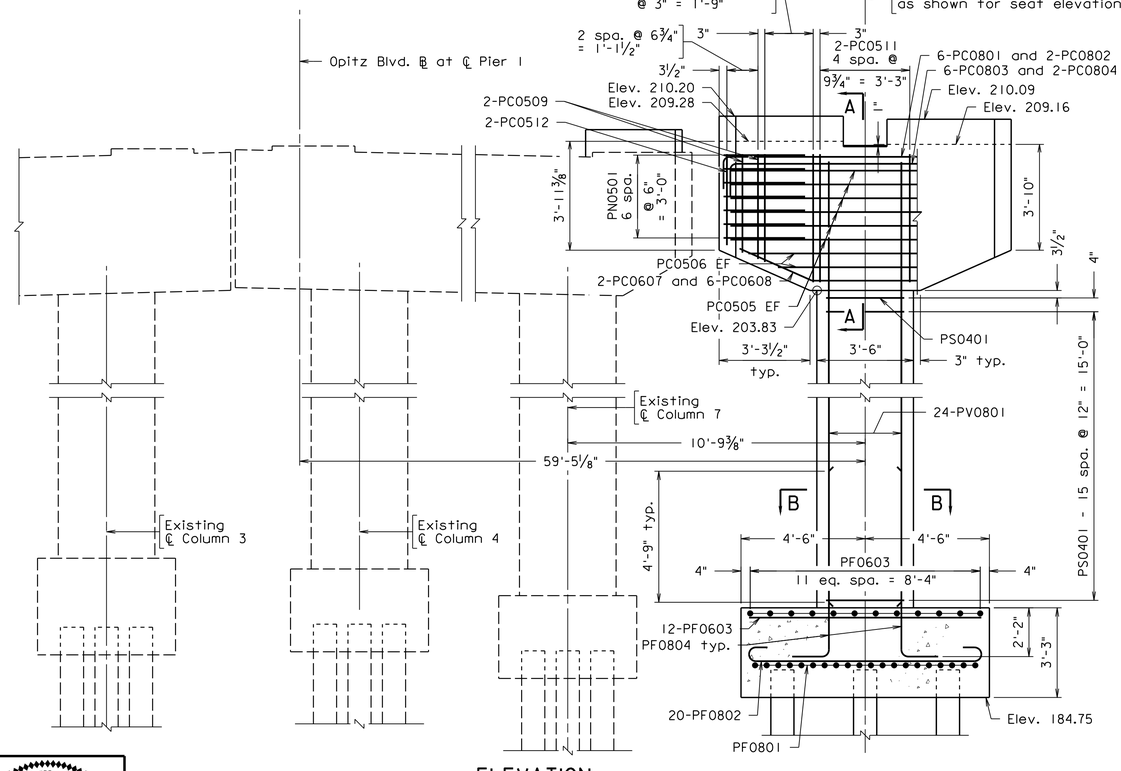

ELEVATION

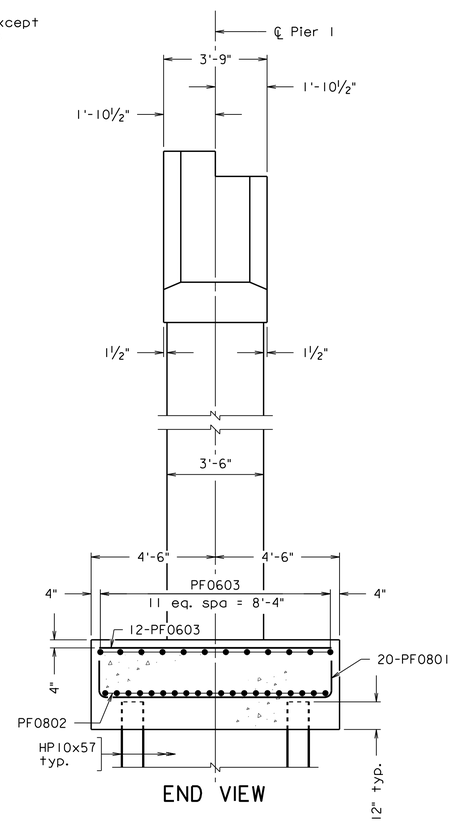

END VIEW

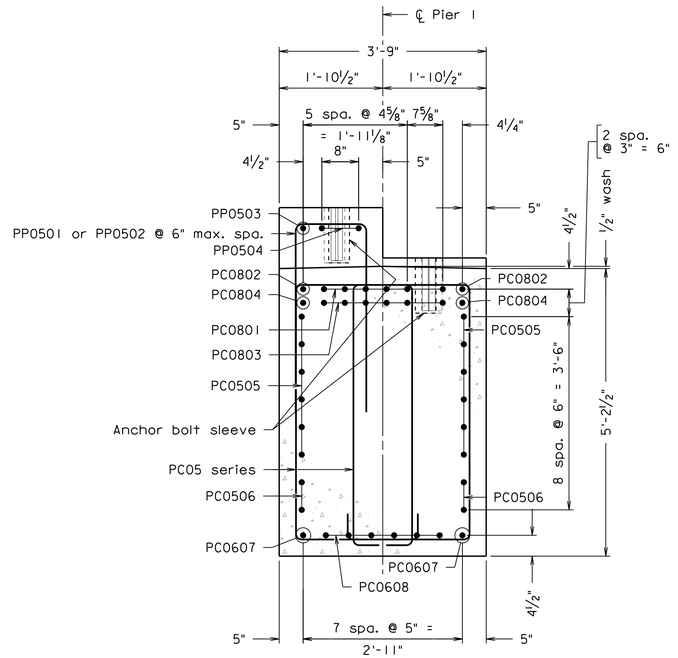

SECTION A-A
Scale: ¾" = 1'-0"

257-38A_027.dgn

COMMONWEALTH OF VIRGINIA
JEREMY SCHLUSSEL
Lic. No. 033974
PROFESSIONAL ENGINEER

Jeremy Schlussel
2022.07.08 18:19:40 -04'00'

WHITMAN REQUARDT & ASSOCIATES
RICHMOND, VA
STRUCTURAL ENGINEER

Scale: ⅜" = 1'-0" unless otherwise noted.

© 2022, Commonwealth of Virginia

No.	Description	Date
Revisions		

COMMONWEALTH OF VIRGINIA
DEPARTMENT OF TRANSPORTATION

STRUCTURE AND BRIDGE DIVISION

PIER 1 WIDENING DETAILS

Designed: AC	Date	Plan No.	Sheet No.
Drawn: MWL	July 2022	257-38A	27 of 125
Checked: KML			

STATE	FEDERAL AID		STATE		SHEET
	ROUTE	PROJECT	ROUTE	PROJECT	NO.
VA.	—		95	0095-076-299, B688	28

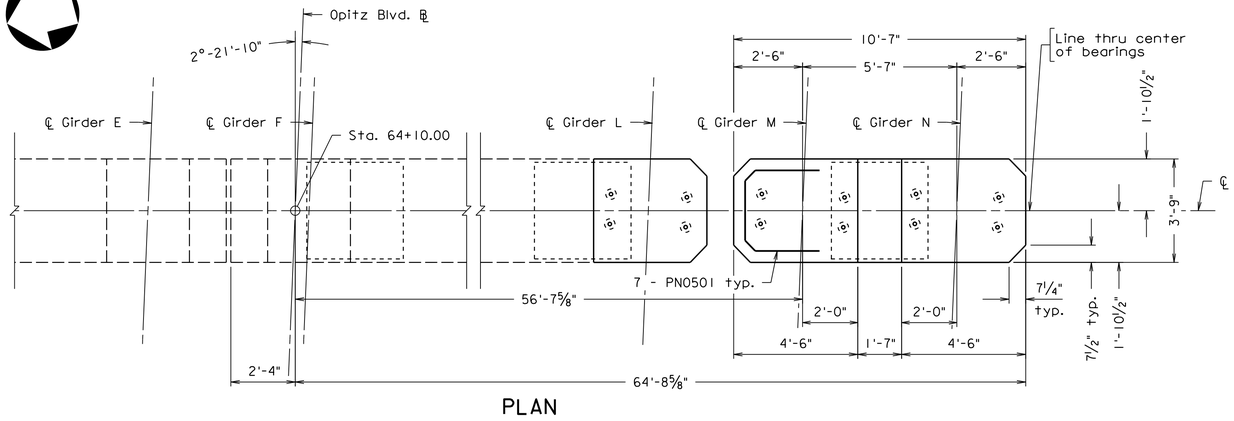

PLAN

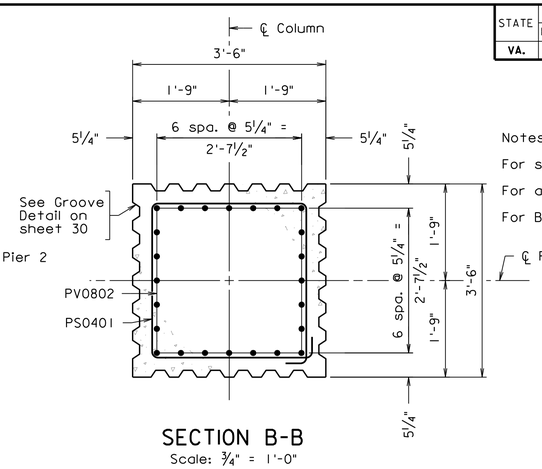

SECTION B-B
Scale: ¾" = 1'-0"

Notes:

For spacing of PF08 series bars, see footing plan on sheet 30.

For anchor bolt layout, see sheet 30.

For Beam seat modification details, see sheet 31.

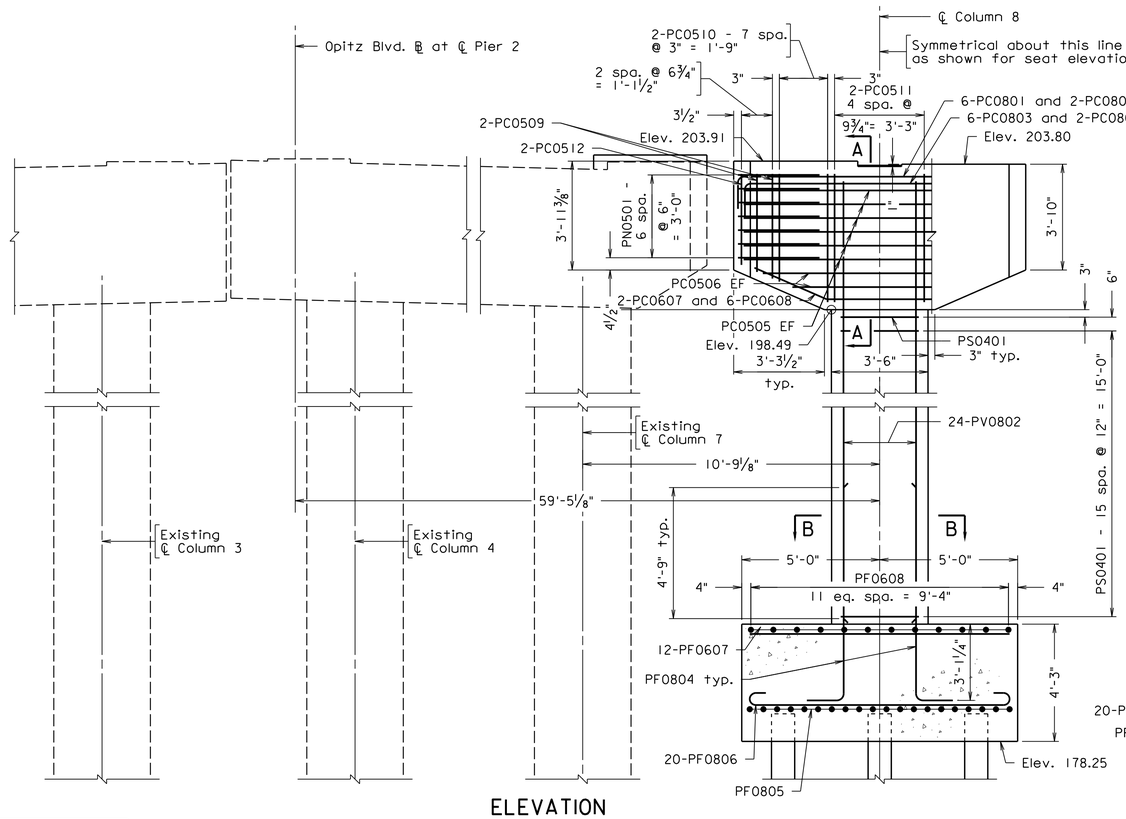

ELEVATION

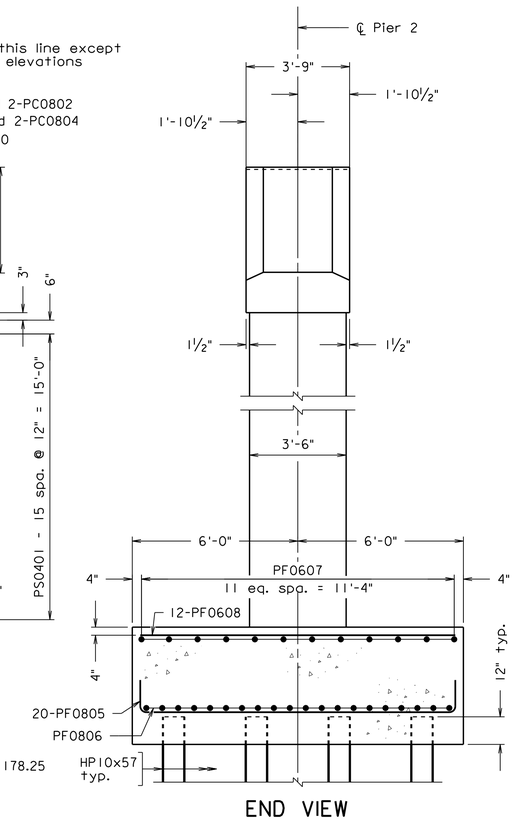

END VIEW

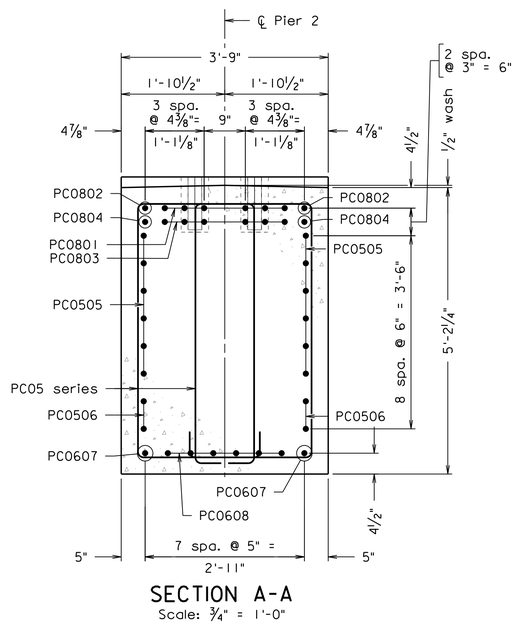

SECTION A-A
Scale: ¾" = 1'-0"

257-38A_028.dgn

COMMONWEALTH OF VIRGINIA
JEREMY SCHLUSSEL
Lic. No. 033974
PROFESSIONAL ENGINEER

Jeremy Schlussel
2022.07.08 18:20:05 -04'00'

WHITMAN REQUARDT & ASSOCIATES
RICHMOND, VA
STRUCTURAL ENGINEER

Scale: ⅜" = 1'-0", unless otherwise noted.

© 2022, Commonwealth of Virginia

No.	Description	Date
Revisions		

COMMONWEALTH OF VIRGINIA
DEPARTMENT OF TRANSPORTATION

STRUCTURE AND BRIDGE DIVISION

PIER 2 WIDENING DETAILS

Designed: AC	Date	Plan No.	Sheet No.
Drawn: MW	July 2022	257-38A	28 of 125
Checked: KMI			

STATE	FEDERAL AID		STATE		SHEET NO.
	ROUTE	PROJECT	ROUTE	PROJECT	
VA.	—		95	0095-076-299, B688	29

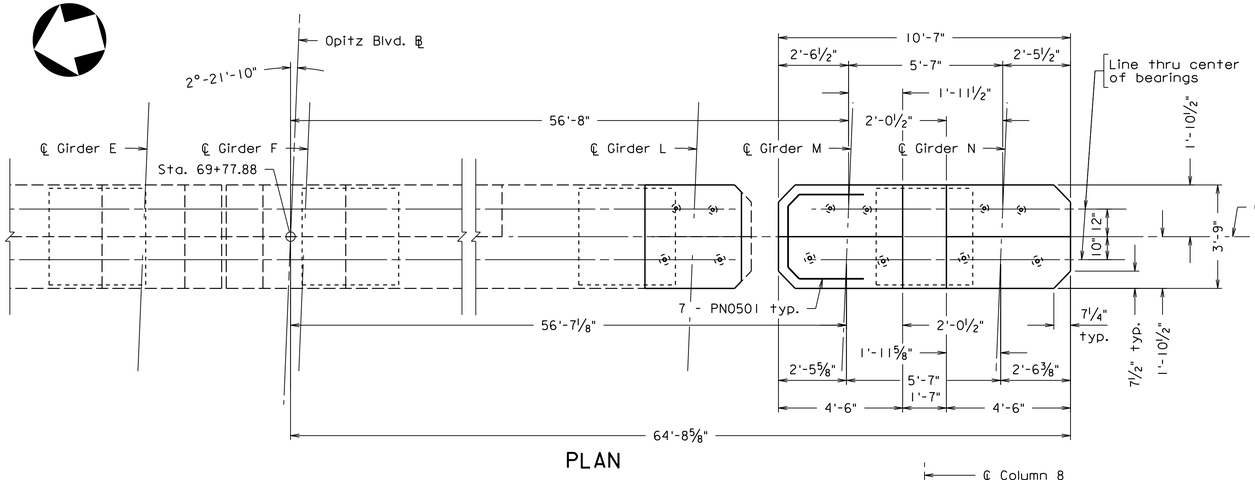

PLAN

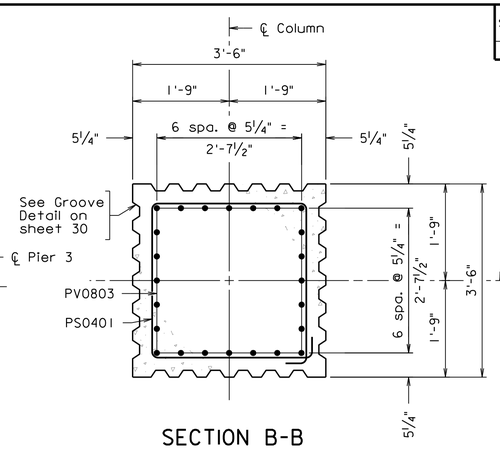

SECTION B-B
Scale: ¾" = 1'-0"

Notes:

For spacing of PF08 series bars, see footing plan on sheet 30.

For anchor bolt layout, see sheet 30.

For Beam seat modification details on exist. structure, see sheet 31.

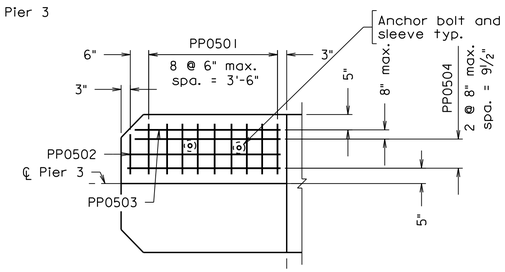

TYPICAL SEAT REINFORCING STEEL PLAN
Seat for Girder M shown, Seat for Girder N similar opposite hand.
Scale: ½" = 1'-0"

PP05 bar spacing may be adjusted where required to clear anchor bolt sleeves.

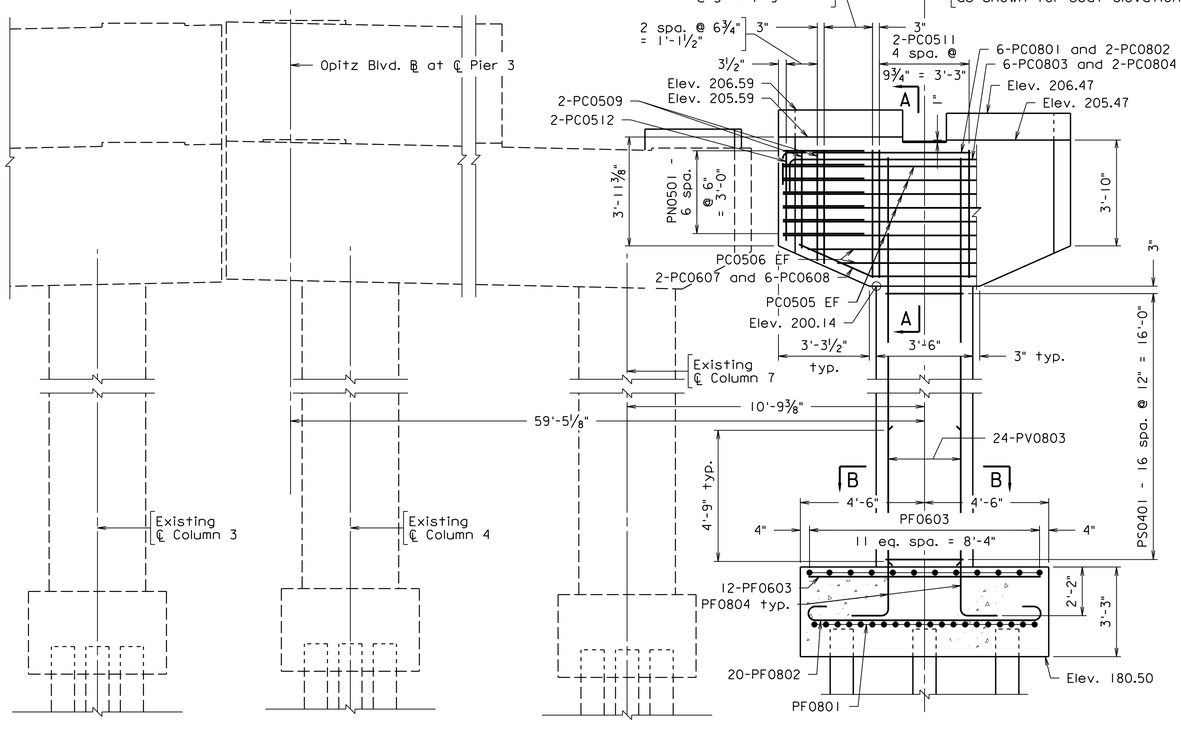

ELEVATION

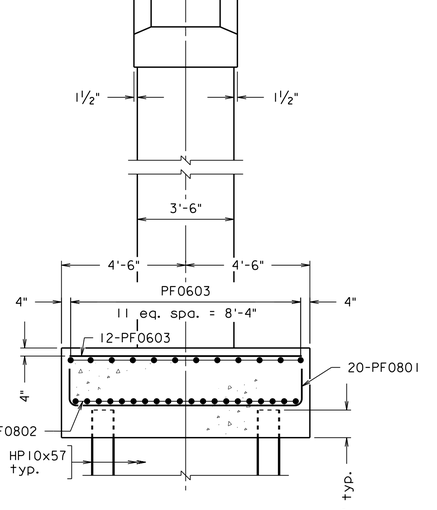

END VIEW

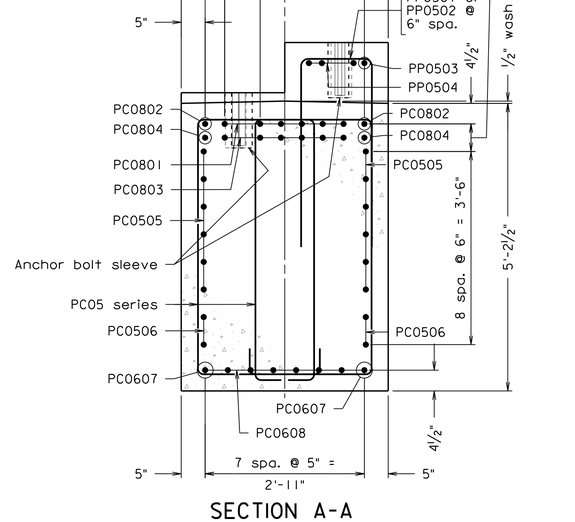

SECTION A-A
Scale: ¾" = 1'-0"

COMMONWEALTH OF VIRGINIA
JEREMY SCHLUSSEL
Lic. No. 033974
PROFESSIONAL ENGINEER

Jeremy Schlussel
2022.07.08 18:19:16 -04'00'

WHITMAN REQUARDT & ASSOCIATES
RICHMOND, VA
STRUCTURAL ENGINEER

Scale: ⅜" = 1'-0" unless otherwise noted.

© 2022, Commonwealth of Virginia

No.	Description	Date
Revisions		

COMMONWEALTH OF VIRGINIA
DEPARTMENT OF TRANSPORTATION

STRUCTURE AND BRIDGE DIVISION

PIER 3 WIDENING DETAILS

Designed: AC	Date	Plan No.	Sheet No.
Drawn: MWL	July 2022	257-38A	29 of 125
Checked: KML			

257-38A_029.dgn

STATE	FEDERAL AID		STATE		SHEET NO.
	ROUTE	PROJECT	ROUTE	PROJECT	
VA.	—		95	0095-076-299, B688	30

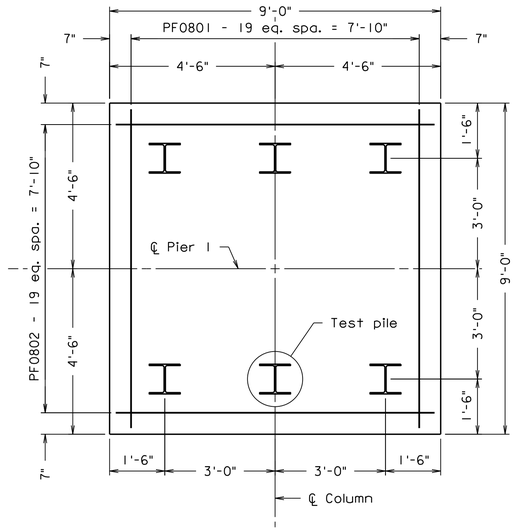

PIER 1 FOOTING PLAN

PF0603 and PF0604 are not shown for clarity.
For spacing of PF0603 and PF0604, see sheet 27.

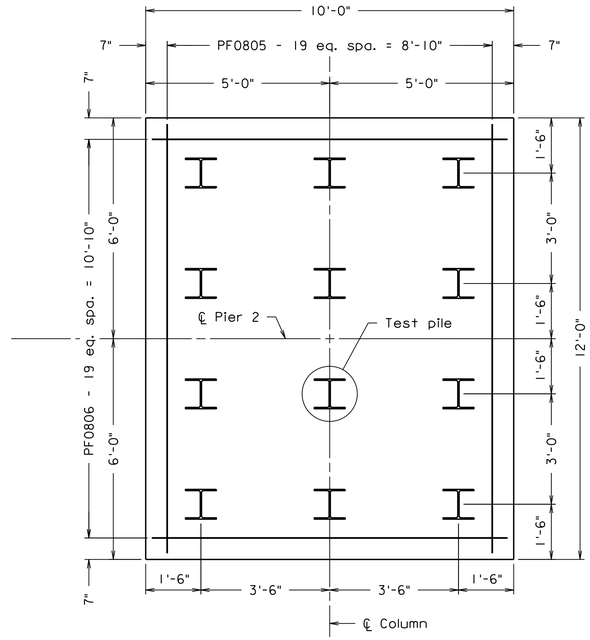

PIER 2 FOOTING PLAN

PF0607 and PF0608 are not shown for clarity.
For spacing of PF0607 and PF0608, see sheet 28.

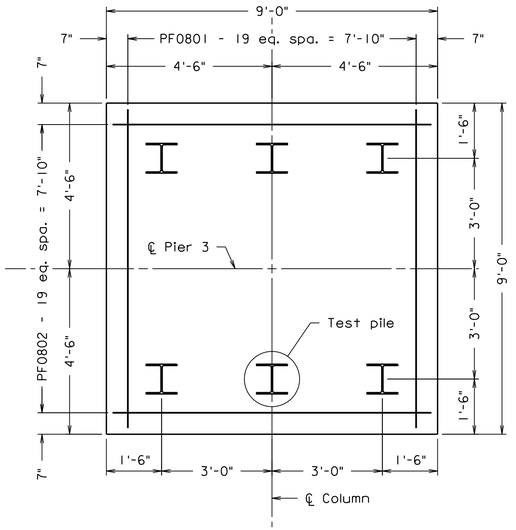

PIER 3 FOOTING PLAN

PF0603 and PF0604 are not shown for clarity.
For spacing of PF0603 and PF0604, see sheet 29.

Notes:

The one required test pile and dynamic pile test are required to be done prior to driving any other permanent piling within the same substructure unit.

For details of anchor bolt sleeve, see bearing sheets 33, 34 and 35.

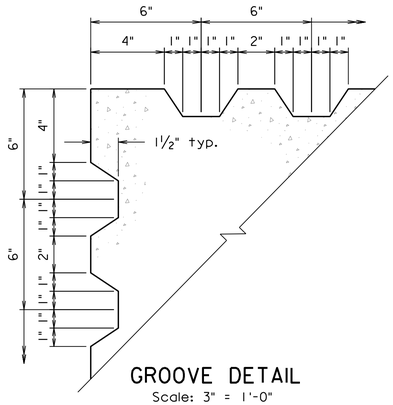

GROOVE DETAIL

Scale: 3" = 1'-0"
Grooves to be cast full height of column.

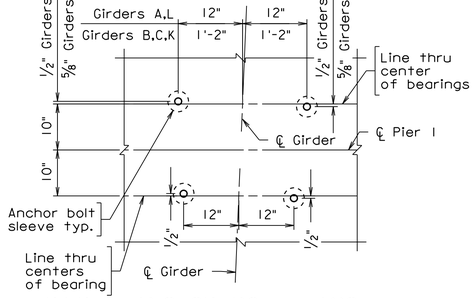

PIER 1 ANCHOR BOLT LAYOUT GIRDERS A-C AND K-L

Scale: ¾" = 1'-0"

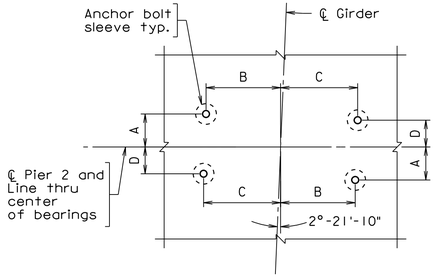

PIER 2 ANCHOR BOLT LAYOUT GIRDERS A-C AND K-L

Scale: ¾" = 1'-0"

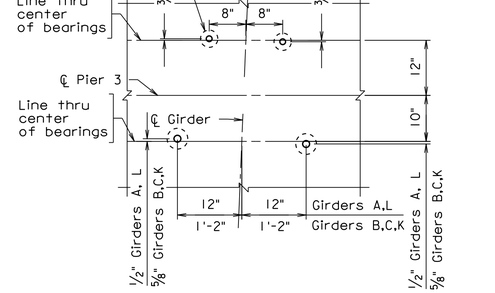

PIER 3 ANCHOR BOLT LAYOUT GIRDERS A-C AND K-L

Scale: ¾" = 1'-0"

PIER 2 ANCHOR BOLT LAYOUT DIMENSION TABLE				
	DIMENSION			
	A	B	C	D
Girder A	4⅜"	1'-4⅜"	1'-4¾"	5⅛"
Girder B	4½"	1'-5⅛"	1'-6¼"	5¾"
Girder C	4½"	1'-5⅛"	1'-6¼"	5¾"
Girder K	7¼"	1'-5¾"	1'-6¼"	5¾"
Girder L	7⅛"	1'-4¼"	1'-4¾"	5⅛"

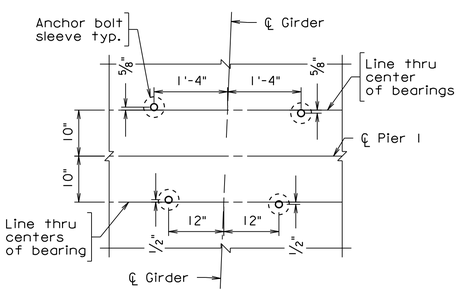

PIER 1 ANCHOR BOLT LAYOUT GIRDERS M AND N

Scale: ¾" = 1'-0"

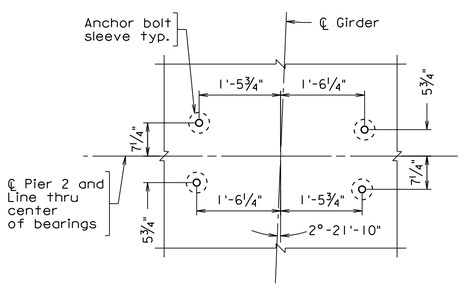

PIER 2 ANCHOR BOLT LAYOUT GIRDERS M AND N

Scale: ¾" = 1'-0"

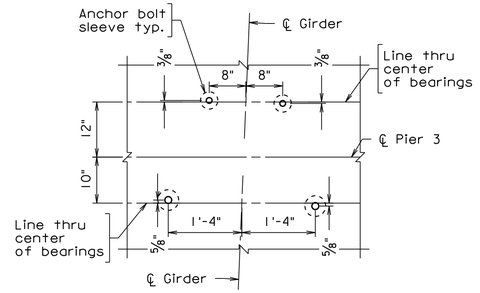

PIER 3 ANCHOR BOLT LAYOUT GIRDERS M AND N

Scale: ¾" = 1'-0"

PILE DATA TABLE				
Substructure Unit	Nominal Axial Resistance Measured During Driving (Tons/pile)	Factored Axial Resistance (Tons/pile)	Estimated Tip Elevation	Minimum Tip Elevation
Pier 1	192	125	144	173
Pier 2	192	125	146	156
Pier 3	192	125	145	155

The Strength Limit State controls the pile design.

COMMONWEALTH OF VIRGINIA
JEFFREY S. BASFORD
Lic. No. 043143
PROFESSIONAL ENGINEER

Jeffrey S Basford
2022.07.08 18:04:36 -04'00'

WHITMAN REQUARDT & ASSOCIATES
RICHMOND, VA
GEOTECHNICAL ENGINEER

COMMONWEALTH OF VIRGINIA
JEREMY SCHLUSSEL
Lic. No. 033974
PROFESSIONAL ENGINEER

Jeremy Schlussel
2022.07.08 18:18:50 -04'00'

WHITMAN REQUARDT & ASSOCIATES
RICHMOND, VA
STRUCTURAL ENGINEER

No.	Description	Date
	Revisions	

COMMONWEALTH OF VIRGINIA
DEPARTMENT OF TRANSPORTATION

STRUCTURE AND BRIDGE DIVISION

MISCELLANEOUS PIER DETAILS

Designed: AC	Date	Plan No.	Sheet No.
Drawn: MW	July 2022	257-38A	30 of 125
Checked: KMI			

Scale: ½" = 1'-0" unless otherwise noted.

© 2022, Commonwealth of Virginia

257-38A_030.dgn

STATE	FEDERAL AID		STATE		SHEET NO.
	ROUTE	PROJECT	ROUTE	PROJECT	
VA.	—		95	0095-076-299, B688	31

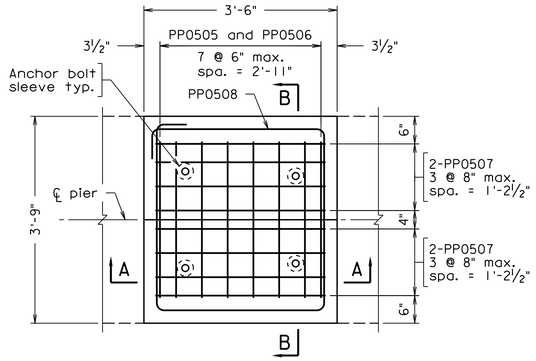

SEAT RECONSTRUCTION TYPE 1

Exterior beam seats shall match existing chamfer ofpier cap.

The vertical leg of the PP0505 and PP0506 bars may be field cut and not be drilled and grouted where located directly under the girder.

Vertical leg of PP0505, PP0506, and PP0507 bars may be field cut to achieve minimum concrete cover and minimum drill and grout depth.

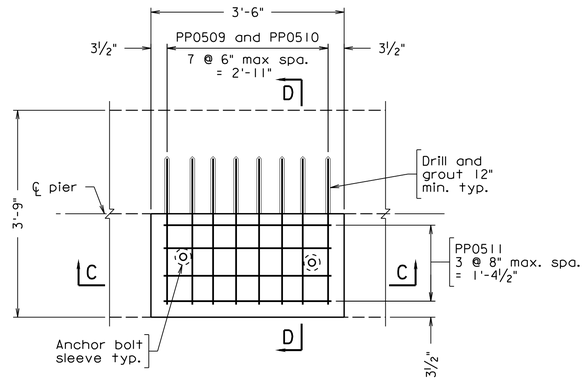

SEAT RECONSTRUCTION TYPE 2

Vertical leg of PP0510 bar may be field cut to achieve minimum concrete cover and minimum drill and grout depth.

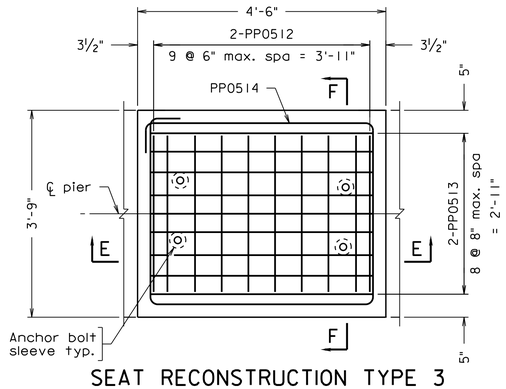

SEAT RECONSTRUCTION TYPE 3

Vertical leg of PP0512 and PP0513 bars may be field cut to achieve minimum concrete cover and minimum drill and grout depth.

Beam Seat Reconstruction Notes:

Beam seat reconstruction shall be in accordance with Section 412 of the Specifications.

Existing surface shall be roughened in accordance with Section 404.03(h) of the Specifications.

Existing reinforcing steel shown for reference only. Existing reinforcing bars shall be field located prior to drilling.

Proposed beam seat reconstruction reinforcing bars may be adjusted where required to clear anchor bolt sleeves and existing reinforcing steel and shall not exceed maximum spacing as noted.

A combination of variable length drill bits may be required to drill below existing girder.

Concrete for beam buildup shall be self consolidating concrete in accordance with Section 217.11 of the Specifications.

Grout for drilled in dowels shall conform to Section 218 of the VDOT Standard Specifications.

For reinforcing steel schedule see sheets 101 thru 102.

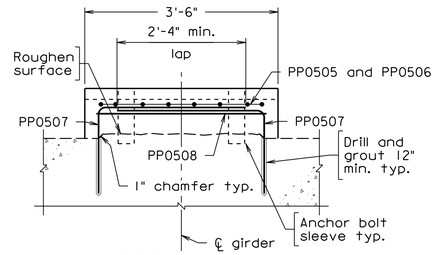

SECTION A-A

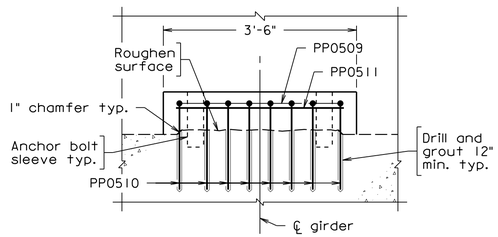

SECTION C-C

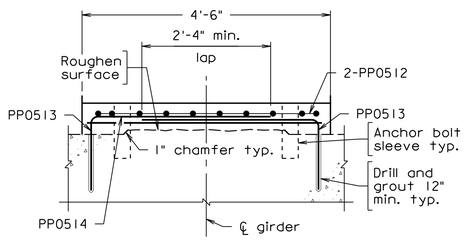

SECTION E-E

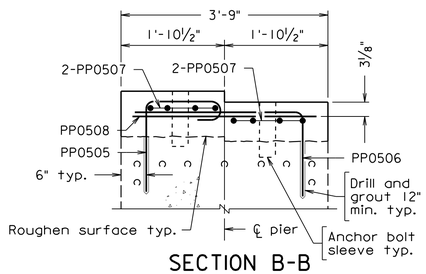

SECTION B-B

Pier 1 shown, Pier 3 similar opposite hand.

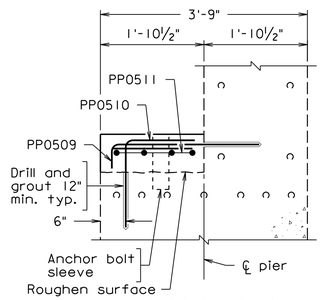

SECTION D-D

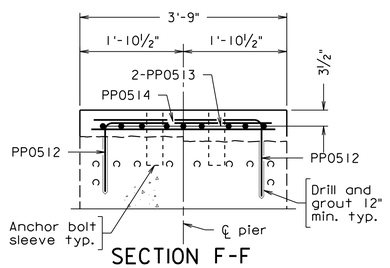

SECTION F-F

APPROXIMATE PIER SEAT BUILDUP TABLE				
Pier	Girder	Type	Downstation Span	Upstation Span
1	Girder A	1	9⅞"	8½"
	Girder B	1	9⅞"	8½"
	Girder C	1	9⅞"	8½"
	Girder K	1	9⅞"	8½"
	Girder L	1	9⅞"	8½"
2	Girder A	3	3"	3"
	Girder B	3	3"	3"
	Girder C	3	3"	3"
	Girder K	3	3"	3"
	Girder L	3	3"	3"
3	Girder A	1	8¼"	8⅝"
	Girder B	2	8¼"	——
	Girder C	2	8¼"	——
	Girder K	2	8¼"	——
	Girder L	1	8¼"	8⅝"

Table is for reference only.

Contractor shall determine seat elevation as existing bottom of girder elevation at centerline of bearing (prior to jacking) minus proposed bearing height.

COMMONWEALTH OF VIRGINIA
JEREMY SCHLUSSEL
Lic. No. 033974
PROFESSIONAL ENGINEER

Jeremy Schlussel
2022.07.08 18:14:40 -04'00'

WHITMAN REQUARDT & ASSOCIATES
RICHMOND, VA
STRUCTURAL ENGINEER

257-38A_031.dgn

Not to scale

© 2022, Commonwealth of Virginia

No.	Description	Date
	Revisions	

COMMONWEALTH OF VIRGINIA
DEPARTMENT OF TRANSPORTATION

STRUCTURE AND BRIDGE DIVISION

BEAM SEAT MODIFICATION DETAILS

Designed: MRD	Date	Plan No.	Sheet No.
Drawn: MRD	July 2022	257-38A	31 of 125
Checked: GTS			

STATE	FEDERAL AID		STATE		SHEET NO.
	ROUTE	PROJECT	ROUTE	PROJECT	
VA.	—		95	0095-076-299, B688	32

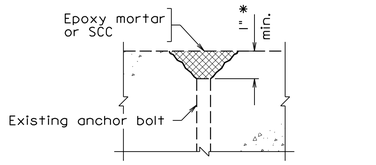

* Removal depth shall be increased as necessary to provide clearance for installation of proposed anchor bolt.

ANCHOR BOLT CUT OFF DETAIL

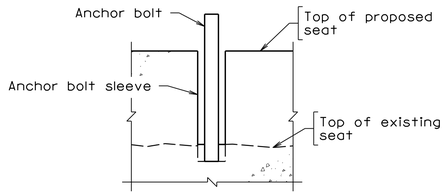

ANCHOR BOLT REPLACEMENT AT SEAT RECONSTRUCTION

Anchor Bolt Removal and Replacement Notes:

All anchor bolts at bearing replacements shall be replaced. All anchor bolts to be replaced shall be replaced in accordance with anchor bolt removal detail and anchor bolt replacement detail.

Anchor bolts at abutments are shifted from centerline of bearing to facilitate installation while existing crossframe or diaphragm is in place. If anchor bolt is to be installed with crossframe or diaphragm removed, Contractor shall contact the Engineer prior to fabrication of sole plates.

Existing anchor bolts shall be removed a minimum of 1 inch below concrete surface. Surface shall be repaired with epoxy mortar except at Reconstruct Bridge Seat locations.

Contractor may elect to use either permanent or temporary anchor bolt sleeve. Anchor bolt sleeve shall only be required in beam seat modification proposed concrete.

Permanent anchor bolt sleeve shall be standard steel pipe - ASTM A53 Grade B and shall be 2 times the size of the anchor bolt diameter.

After removal of temporary anchor bolt sleeve, inside surface of anchor bolt pocket in bearing seat shall be roughend.

The Contractor may elect not to provide anchor bolt sleeves at any locations and cast the anchor bolts directly into concrete at their own risk and expense.

For additional information on anchor bolts and bearings, see sheets 33-35.

Jacking and Blocking Notes:

The Contractor shall submit to the Engineer for approval, in addition to Section 412.03(e) of the VDOT Specifications, working drawings and design computations for temporary support, jacking and blocking, which shall bear the seal of a Professional Engineer licensed in the Commonwealth of Virginia. The Contractor shall not proceed with jacking and blocking until the working drawings have been approved.

If Contractor elects to utilize existing cross frame, design computations shall verify if the existing corss frames and connections are acceptable for jacking and blocking dead and live loads. If they are determined to not be acceptable, the design, removal and modifications necessary for installation of jacking and blocking shall be included in the pay item Jacking and Blocking Beams.

Temporary support, jacking and blocking shall be designed to support the dead load and live loads of the superstructure (see load table this sheet).

The Contractor's bearing assembly for the jacking and blocking shall evenly distribute the loads. If an area of delaminated or spalled concrete is within the limits of the proposed jacking and blocking location, this area shall be repaired prior to the installation of the jacking and blocking elements.

During the jacking operation, no traffic will be allowed above beams being jacked. Beams shall be blocked prior to application of traffic loads.

Jacking shall be performed until there is a transfer of load and not to exceed 1/8" unless directed by the Engineer.

At no time shall both ends of any span be supported on temporary support, jacking, or blocking at the same time.

Jacks shall be of sufficient size to jack 150 percent of anticipated load.

Jacking Load Table is for Contractor's reference.

JACKING DEAD LOADS PER BEAM END (KIPS)

Substructure	Span	Girder	Dead Load	Live Load
Abutment A, Pier 1	a	A,L	65	90
Abutment A, Pier 1	a	B,C,K	70	105
Pier 1, Pier 3	b, c	A,L	70	100
Pier 1, Pier 3	b, c	B,C,K	80	115
Pier 2	b, c	A,L	315	220
Pier 2	b, c	B,C,K	345	250
Pier 3, Abutment A	d	A-L	20	65

Table is for reference only.

Dead and live load reactions are based on the existing bridge loads and traffic lane configuration.

Contractor shall determine seat elevation as existing bottom of girder elevation at centerline of bearing (prior to jacking) minus proposed bearing height.

No allowance has been included for dynamic or temporary construction loads.

257-38A_032.dgn

COMMONWEALTH OF VIRGINIA
JEREMY SCHLUSSEL
Lic. No. 033974
PROFESSIONAL ENGINEER

Jeremy Schlussel
2022.07.08 18:15:20 -04'00'

WHITMAN REQUARDT & ASSOCIATES
RICHMOND, VA
STRUCTURAL ENGINEER

Not to scale unless otherwise noted.

© 2022, Commonwealth of Virginia

No.	Description	Date
	Revisions	

COMMONWEALTH OF VIRGINIA
DEPARTMENT OF TRANSPORTATION

STRUCTURE AND BRIDGE DIVISION

ANCHOR BOLT REPLACEMENT AND JACKING AND BLOCKING DETAILS

Designed: MRD	Date	Plan No.	Sheet No.
Drawn: MRD	July 2022	257-38A	32 of 125
Checked: GTS			

STATE	FEDERAL AID		STATE		SHEET NO.
	ROUTE	PROJECT	ROUTE	PROJECT	
VA.	—		95	0095-076-299, B688	33

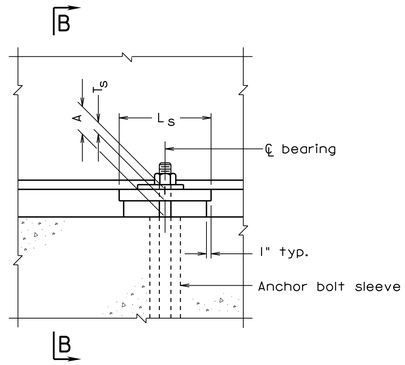

ELEVATION
EXPANSION ASSEMBLY

Bearing stiffener(s) not shown for clarity

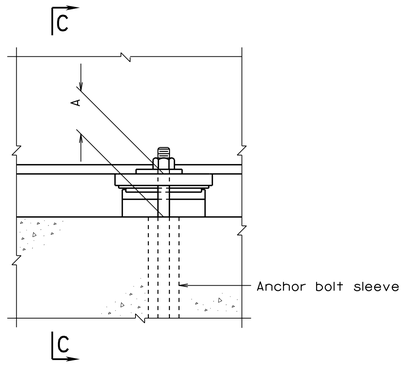

ELEVATION
SLIDING EXPANSION ASSEMBLY

Bearing stiffener(s) not shown for clarity

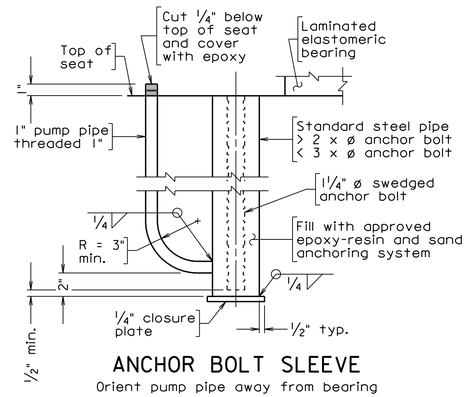

ANCHOR BOLT SLEEVE

Orient pump pipe away from bearing

This detail is applicable on new substructure only.

Notes:

Material: Elastomer - 50 durometer hardness.
Shim - ASTM A36 or A1011 mild steel.
Anchor Bolt - AASHTO M314, Grade 55
Standard steel pipe - ASTM A53 Grade B.

The Contractor may elect not to provide anchor bolt sleeves at any locations and cast the anchor bolts directly into concrete at their own risk and expense.

Bevel sole plates to grade shown. Plates shall not be painted on the surface in contact with the elastomeric bearing.

Elastomeric bearings shall be molded as a single unit.

Max. horizontal movement is the maximum horizontal superstructure displacement. If the maximum shear deformation of the elastomeric pads exceeds 75% of Max. horizontal movement during construction of the bridge, the Contractor shall reset the bearings at no additional cost to the Department.

* Weld shall terminate 1/4" from edge of sole plate.

** Centerline of girder (including center line and text) shall be marked on the top, bottom and side surfaces of the laminated elastomeric bearing prior to shipping. The markings shall be done with an indelible ink or flexible paint of contrasting color.

PTFE and stainless steel sliding plates shall conform to Section 408.03 of the specifications.

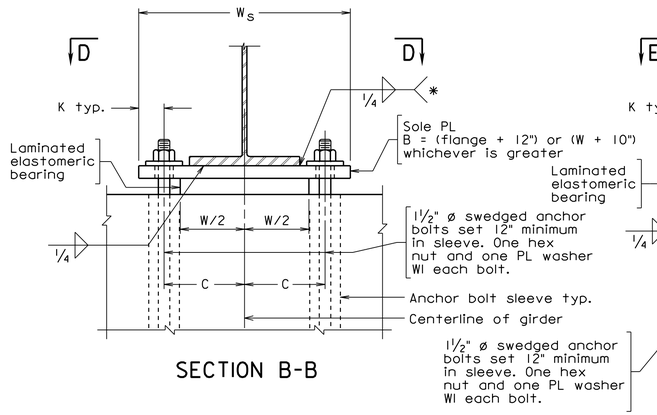

SECTION B-B

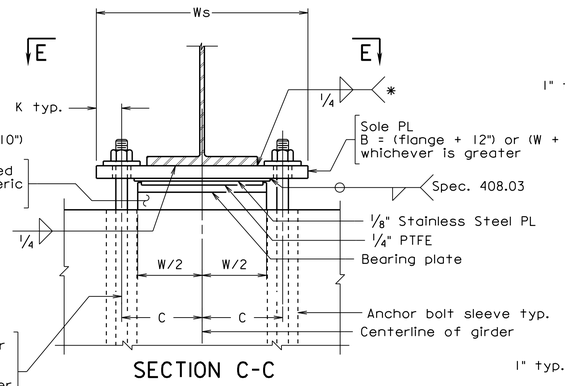

SECTION C-C

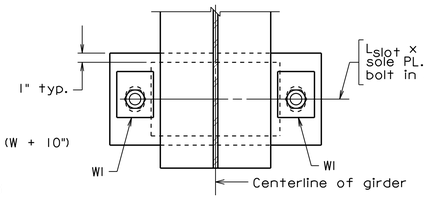

SECTION D-D

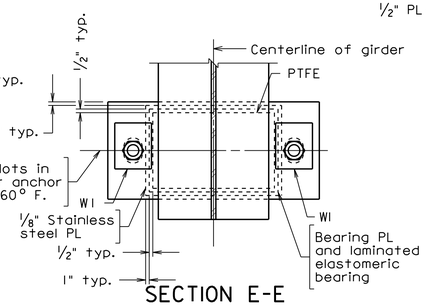

SECTION E-E

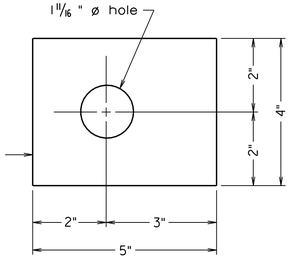

WASHER WI

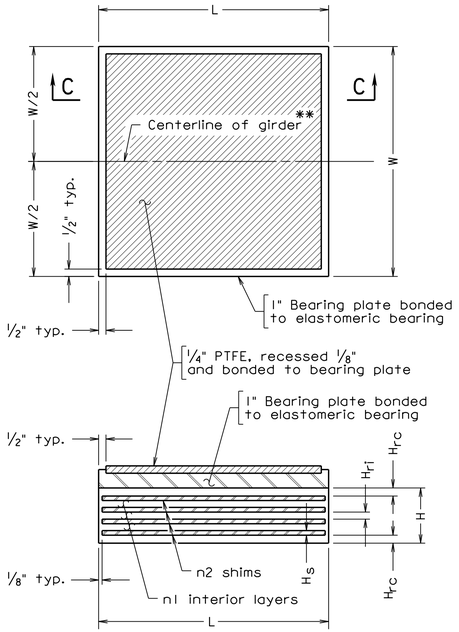

SECTION C-C

LAMINATED ELASTOMERIC BEARING
WITH BONDED BEARING PLATE AND PTFE

For fixed laminated elastomeric bearing, see detail on sheet 34.

Span	Abut.	Pier	Girder	Bearing type	A	C	K	Laminated Elastomeric Bearing						Sole Plate			Grade %	Max. Horizontal Movement inches	Vertical Load Service I kips	L_{slot}	W_{slot}
								W	L	H	H_{rc}	n1 @ H_{ri}	n2 @ H_s	W_s	L_s	T_s					
a		1	A,B,C,L,K	Exp	4.603	12	3.75	20	12	3.103	0.375	3 @ 0.625	4 @ 0.1196	31.5	14	1.500	0.00	1.52	160	4.0625	2.8125
a		1	M,N	Exp	4.603	12	3.75	20	12	3.103	0.375	3 @ 0.625	4 @ 0.1196	31.5	14	1.500	0.00	1.52	160	4.0625	2.8125
b		1	A,L	Sliding	5.853	12	3.75	20	12	3.103	0.375	3 @ 0.625	4 @ 0.1196	31.5	18	1.500	0.00	2.88	145	5.5625	2.8125
b		1	B,C,K	Sliding	5.853	14	3.75	24	12	3.103	0.375	3 @ 0.625	4 @ 0.1196	35.5	18	1.500	0.00	2.88	155	5.5625	2.8125
b		1	M,N	Sliding	5.853	16	3.75	28	12	3.103	0.375	3 @ 0.625	4 @ 0.1196	39.5	18	1.500	0.00	2.88	185	5.5625	2.8125
c		3	A,L	Sliding	6.067	12	3.75	20	12	3.103	0.375	3 @ 0.625	4 @ 0.1196	31.5	18	1.714	-2.38	2.64	135	5.5625	2.8125
c		3	B,C,K	Sliding	6.067	14	3.75	24	12	3.103	0.375	3 @ 0.625	4 @ 0.1196	35.5	18	1.714	-2.38	2.64	160	5.5625	2.8125
c		3	M,N	Sliding	6.067	16	3.75	28	12	3.103	0.375	3 @ 0.625	4 @ 0.1196	39.5	18	1.714	-2.38	2.64	135	5.5625	2.8125
e	C		O	Exp	4.839	11	3	18	12	3.103	0.375	3 @ 0.625	4 @ 0.1196	28	14	1.736	3.37	1.02	125	4	2.25
e	C		P	Exp	4.793	11	3	18	12	3.103	0.375	3 @ 0.625	4 @ 0.1196	28	14	1.690	2.71	1.02	125	4	2.25
e	C		Q	Exp	4.772	11	3	18	12	3.103	0.375	3 @ 0.625	4 @ 0.1196	28	14	1.668	2.40	1.02	125	4	2.25
e	C		R	Exp	4.757	11	3	18	12	3.103	0.375	3 @ 0.625	4 @ 0.1196	28	14	1.654	2.20	1.02	125	4	2.25
e	C		S	Exp	4.772	11	3	18	12	3.103	0.375	3 @ 0.625	4 @ 0.1196	28	14	1.668	2.40	1.02	125	4	2.25
e	C		T	Exp	4.793	11	3	18	12	3.103	0.375	3 @ 0.625	4 @ 0.1196	28	14	1.690	2.71	1.02	125	4	2.25

All dimensions in table are in inches.

257-38A_033.dgn

BBD-9 MOD. 10-30-2020

COMMONWEALTH OF VIRGINIA
JEREMY SCHLUSSEL
Lic. No. 033974
PROFESSIONAL ENGINEER

Jeremy Schlussel
2022.07.08 18:15:50 -04'00'

WHITMAN REQUARDT & ASSOCIATES
RICHMOND, VA
STRUCTURAL ENGINEER

© 2022, Commonwealth of Virginia

No.	Description	Date
	Revisions	

COMMONWEALTH OF VIRGINIA
DEPARTMENT OF TRANSPORTATION

STRUCTURE AND BRIDGE DIVISION

BEARING DETAILS
1 OF 3

Designed: KML	Date	Plan No.	Sheet No.
Drawn: CZH	July 2022	257-38A	33 of 125
Checked: MRD			

STATE	FEDERAL AID		STATE		SHEET NO.
	ROUTE	PROJECT	ROUTE	PROJECT	
VA.	—		95	0095-076-299, B688	34

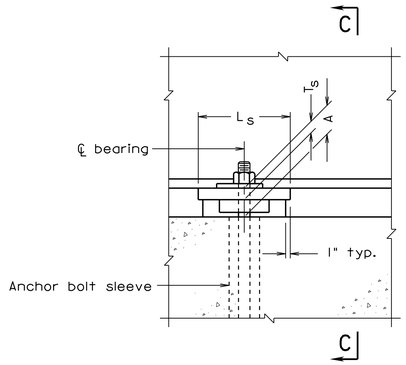

ELEVATION
FIXED ASSEMBLY
ABUTMENT A

Bearing stiffener(s) not shown for clarity

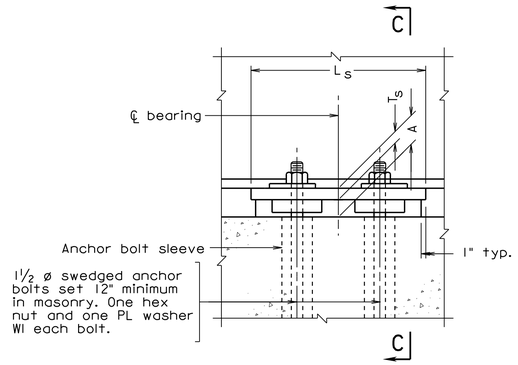

ELEVATION
FIXED ASSEMBLY
PIER 2

Bearing stiffener(s) not shown for clarity

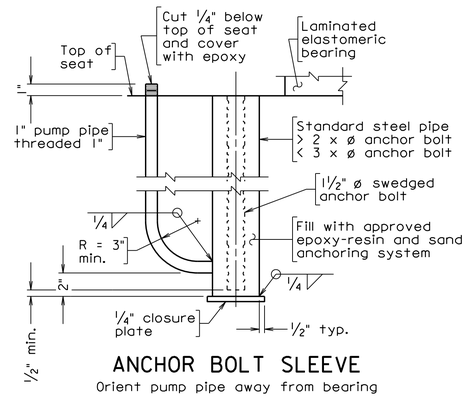

ANCHOR BOLT SLEEVE

Orient pump pipe away from bearing

This detail is applicable on new substructure only.

Notes:

Material: Elastomer - 50 durometer hardness.
Shim - ASTM A36 or A1011 mild steel.
Anchor Bolt - AASHTO M314, Grade 55.
Standard steel pipe - ASTM A53 Grade B.

The Contractor may elect not to provide anchor bolt sleeves at any locations and cast the anchor bolts directly into concrete at their own risk and expense.

Bevel sole plates to grade shown. Plates shall not be painted on the surface in contact with the elastomeric bearing.

Elastomeric bearings shall be molded as a single unit.

Max. horizontal movement is the maximum horizontal superstructure displacement. If the maximum shear deformation of the elastomeric pads exceeds 75% of Max. horizontal movement during construction of the bridge, the Contractor shall reset the bearings at no additional cost to the Department.

* Anchor bolts shall be set in the center of the slot.

** Weld shall terminate ¼" from edge of sole plate.

Centerline of girder (including center line and text) shall be marked on the top, bottom and side surfaces of the laminated elastomeric bearing prior to shipping. The markings shall be done with an indelible ink or flexible paint of contrasting color.

*** Horizontal movement for fixed bearings is for transverse slot.

Contractor shall not weld sole plate to existing girders at Abutment A with bearing pad in place or shall ensure protection of bearing pad during welding.

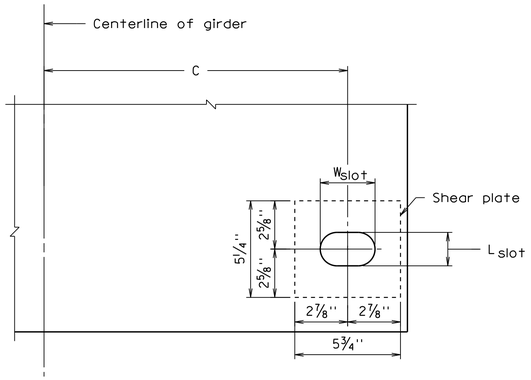

TYPICAL SOLE PLATE
AND SHEAR PLATE SLOT DETAIL

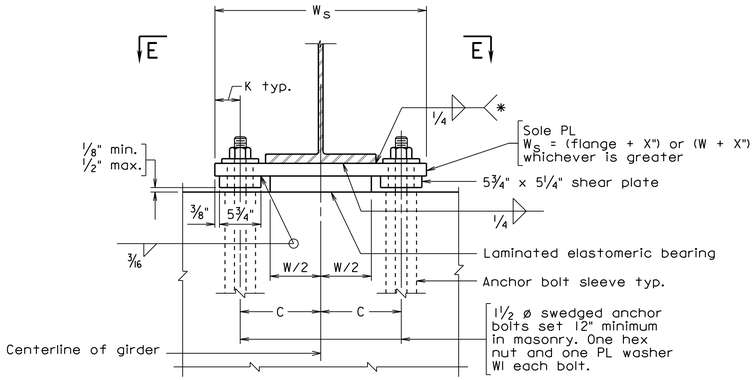

SECTION C-C

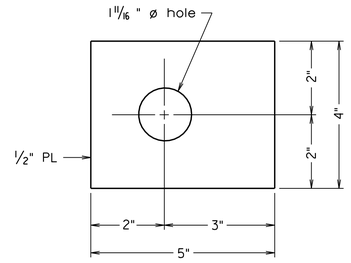

WASHER WI

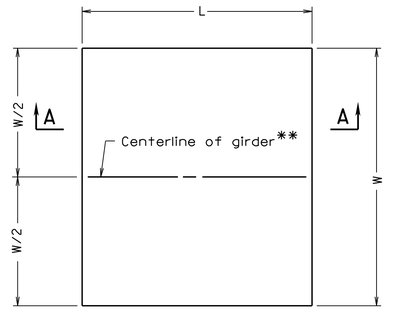

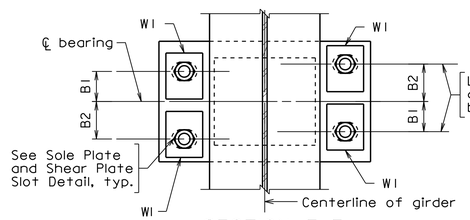

SECTION E-E
At Pier 2

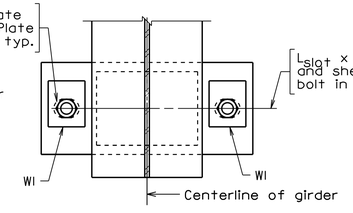

SECTION E-E
At Abutment A

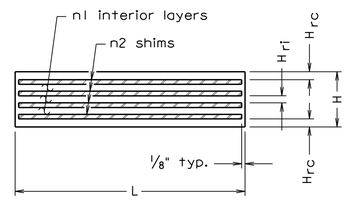

SECTION A-A
LAMINATED ELASTOMERIC BEARING

Span	Abut.	Pier	Girder	Bearing type	A	B1	B2	C	K	Laminated Elastomeric Bearing						Sole Plate			Grade %	Max. Horizontal Movement inches ***	Vertical Load Service I kips	L_{slot}	W_{slot}
										W	L	H	H_{rc}	n1 @ H_{ri}	n2 @ H_s	W_s	L_s	T_s					
a	A		A,B,C,L,K	Fix	3.228	-	-	13	3.75	18	12	2.478	0.25	3 @ 0.5	4 @ 0.1196	33.5	14	0.75	0.00	0.70	160	1.8125	2.8125
a	A		M,N	Fix	3.228	-	-	13	3.75	18	12	2.478	0.25	3 @ 0.5	4 @ 0.1196	33.5	14	0.75	0.00	0.70	160	1.8125	2.8125
b,c		2	A	Fix	6.957	3.75	6.5	16.5	3.75	25	20	5.337	0.375	6 @ 0.625	7 @ 0.1196	40.5	22	1.619	-1.08	0.70	480	1.8125	2.8125
b,c		2	B,C	Fix	7.207	3.75	6.5	18	3.75	28	20	5.337	0.375	6 @ 0.625	7 @ 0.1196	43.5	22	1.869	-1.08	0.70	555	1.8125	2.8125
b,c		2	M,N	Fix	6.957	6.5	6.5	18	3.75	28	20	5.337	0.375	6 @ 0.625	7 @ 0.1196	43.5	22	1.619	-1.08	0.70	565	1.8125	2.8125
b,c		2	L	Fix	6.957	6.5	6.5	16.5	3.75	25	20	5.337	0.375	6 @ 0.625	7 @ 0.1196	40.5	22	1.619	-1.08	0.70	480	1.8125	2.8125
b,c		2	K	Fix	7.207	6.5	6.5	18	3.75	28	20	5.337	0.375	6 @ 0.625	7 @ 0.1196	43.5	22	1.869	-1.08	0.70	555	1.8125	2.8125

All dimensions in table are in inches.

BBD-9 MOD. 10-30-2020

257-38A_034.dgn

COMMONWEALTH OF VIRGINIA
JEREMY SCHLUSSEL
Lic. No. 033974
PROFESSIONAL ENGINEER

Jeremy Schlussel
2022.07.08 18:16:13 -04'00'

WHITMAN REQUARDT & ASSOCIATES
RICHMOND, VA
STRUCTURAL ENGINEER

No.	Description	Date
	Revisions	

COMMONWEALTH OF VIRGINIA
DEPARTMENT OF TRANSPORTATION

STRUCTURE AND BRIDGE DIVISION

BEARING DETAILS
2 OF 3

Designed: KML	Date	Plan No.	Sheet No.
Drawn: CZH	July 2022	257-38A	34 of 125
Checked: MRD			

© 2022, Commonwealth of Virginia

STATE	FEDERAL AID		STATE		SHEET NO.
	ROUTE	PROJECT	ROUTE	PROJECT	
VA.	—		95	0095-076-299, B688	35

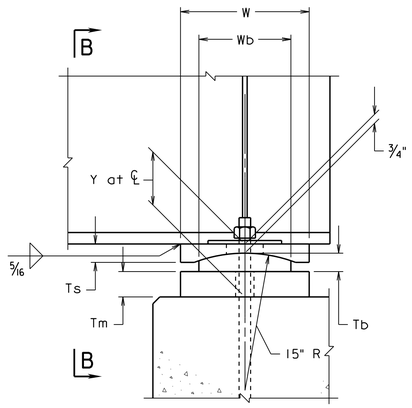

EXPANSION BEARING
PIER ELEVATION

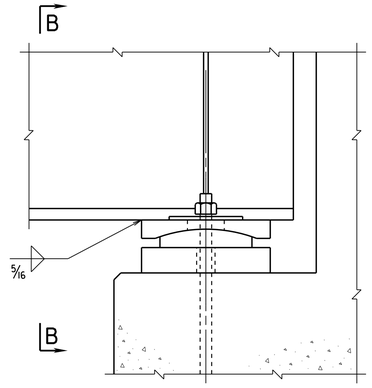

EXPANSION BEARING
ABUTMENT ELEVATION

Notes:

Fill slots and holes in masonry plate around anchor bolts with a non-hardening caulking compound or elastic joint sealer.

For expansion bearing, bevel sole plate to match grade if grade exceeds 1%.

Bearing stiffeners shown are omitted if rolled beam is used.

Radius may be machined to compensate for grade.

Bearing shall be set so that at 60°F it is at the midpoint of its movement.

For expansion bearings, 15" radius tolerances: Sole PL - 0", + .01"
Bronze PL - .01", + 0"

Anchor bolts shall be AASHTO M314, Grade 55.

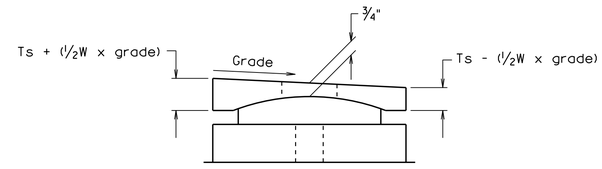

PART DETAIL OF
EXPANSION BEARING
Showing beveled sole plate

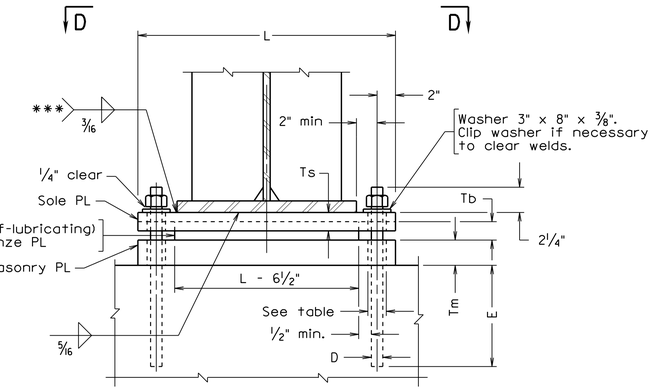

SECTION B-B

***Weld shall terminate 1/4"
from edge of bearing plate.

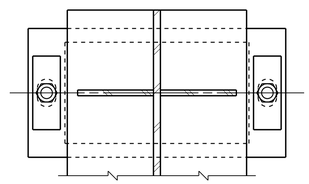

SECTION D-D

DESIGNATION TABLE

Span	Abut.	Pier	Girder	Type	L	W	Wb	Ts	Tb	D	E	Sole plate slots	Y	Tm	% Grade	Δ	Fh	Reaction (kips)
d		3	A,L,M,N	Exp.	20	16	10	1.625	1.625	1.250	12	3 1/2" x 1 3/8"	3.625	1.250	-2.43	1.125	5	75
d		3	B thru K	Exp.	20	16	10	1.625	1.625	1.250	12	3 1/2" x 1 3/8"	3.625	1.250	-2.43	1.125	5	75
d		3	D-J	Exp.	20	16	10	1.625	1.625	1.250	12	3 1/2" x 1 3/8"	3.625	1.250	-2.43	1.125	5	75
d	B		A,L,M,N	Exp.	20	13.5	7.5	1.250	1.250	1.250	12	3 3/4" x 1 3/8"	3.125	1.125	-2.59	1.250	5	75
d	B		B thru K	Exp.	20	13.5	7.5	1.250	1.250	1.250	12	3 3/4" x 1 3/8"	3.125	1.125	-2.59	1.250	5	75
d	B		D-J	Exp.	20	13.5	7.5	1.250	1.250	1.250	12	3 3/4" x 1 3/8"	3.125	1.125	-2.59	1.250	5	75

Slotted holes in sole plate may be drilled or machine burned.
Dimensions Ts, Tb and Y are measured at ℄ of bearing.
All dimensions in table are in inches.

Not to scale

© 2022, Commonwealth of Virginia

257-38A_035.dgn

BBD-4 MOD 10-30-2020

COMMONWEALTH OF VIRGINIA
JEREMY SCHLUSSEL
Lic. No. 033974
PROFESSIONAL ENGINEER

Jeremy Schlussel
2022.07.08 18:16:39 -04'00'

WHITMAN REQUARDT & ASSOCIATES
RICHMOND, VA
STRUCTURAL ENGINEER

No.	Description	Date
	Revisions	

COMMONWEALTH OF VIRGINIA
DEPARTMENT OF TRANSPORTATION

STRUCTURE AND BRIDGE DIVISION

BEARING DETAILS
3 OF 3

Designed: KML	Date	Plan No.	Sheet No.
Drawn: CZH	July 2022	257-38A	35 of 125
Checked: MRD			

STATE	FEDERAL AID		STATE		SHEET NO.
	ROUTE	PROJECT	ROUTE	PROJECT	
VA.	—		95	0095-076-299, B688	36

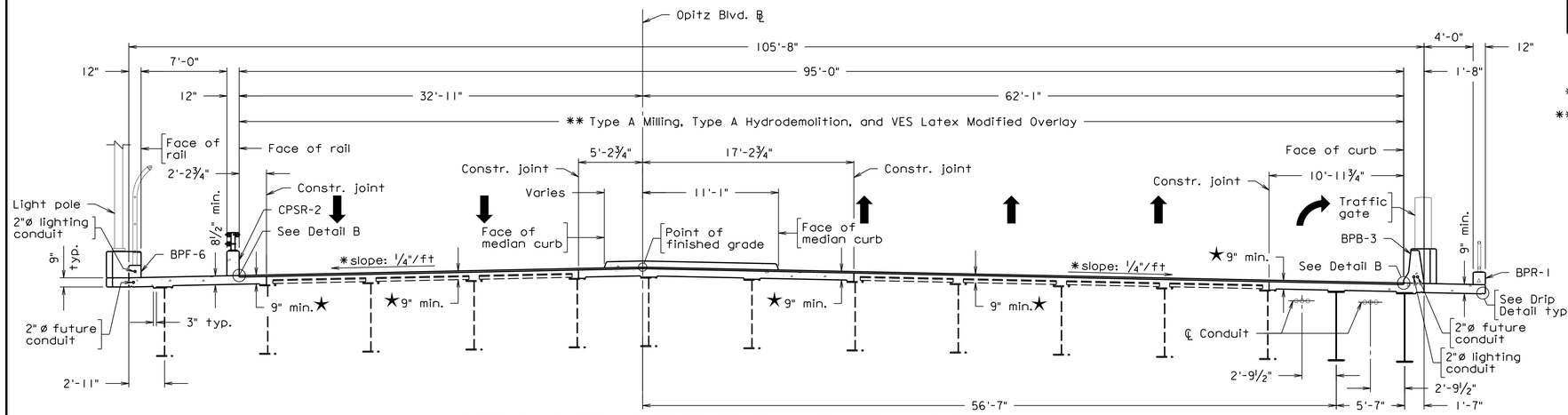

★ Dimension includes deck thickness and overlay.

OPITZ BLVD TRANSVERSE SECTION AT MEDIAN CURB

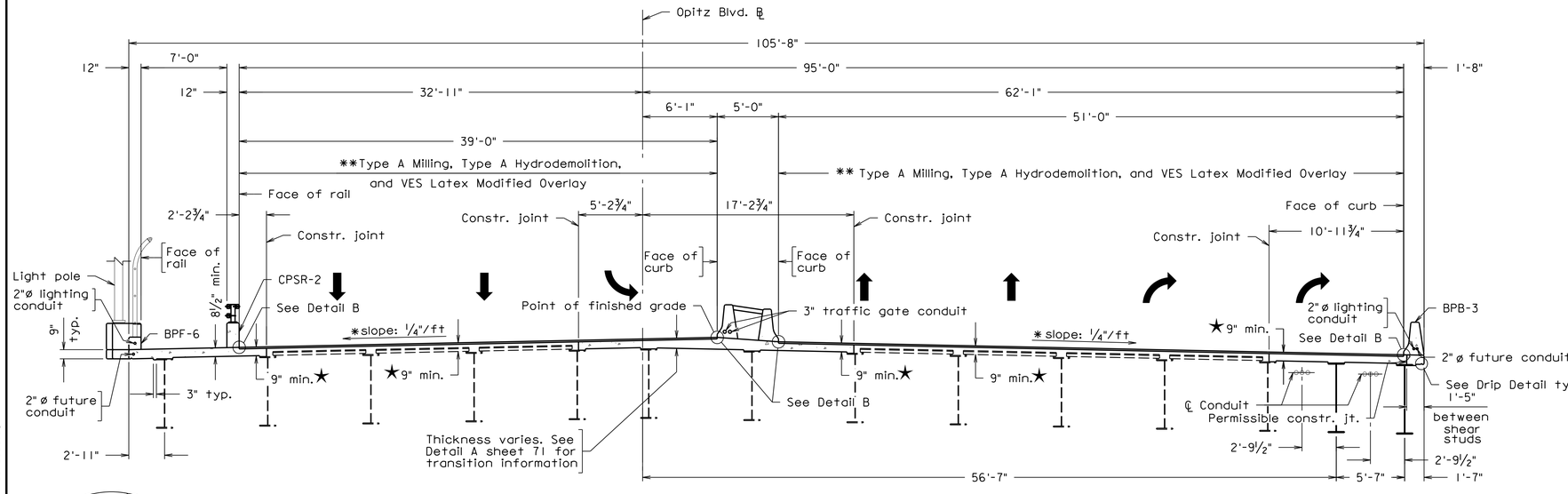

OPITZ BLVD TRANSVERSE SECTION AT MEDIAN BARRIER

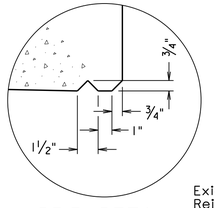

DRIP DETAIL

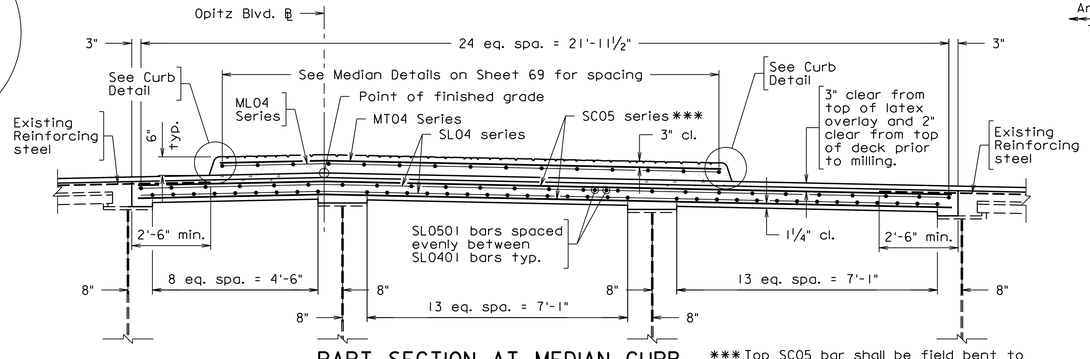

PART SECTION AT MEDIAN CURB
Scale: ½" = 1'-0"

*** Top SC05 bar shall be field bent to match slope of top of deck as cast.

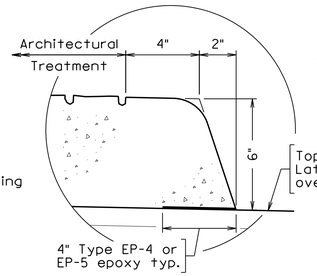

CURB DETAIL
Scale: 3" = 1'-0"

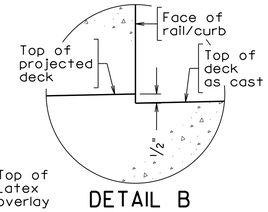

DETAIL B
Not to scale

Notes:

*¼" per foot was used to match existing slope.

**Type A milling depth in areas of existing deck shall be 1½" and depth in areas of new deck shall be ½". Type A Hydrodemolition shall only occur in areas of remaining existing deck and shall be ½". VES Latex Modified Overlay depth at remaining existing deck shall be 2½" and depth at new deck shall be 1½". Type A milling depth at approach slabs shall be ½". VES Latex Modified Overlay depth at approach slabs shall be 3". See sheet 37 for Typical deck milling and overlay section at construction joint.

Final latex overlay shall be ½" higher than existing grade.

Existing asphalt overlay on approach slabs shall be removed and shall be paid for by Remove Asphalt Concrete Overlay.

Contractor shall not perform milling operation without temporary shielding installed below underside of deck.

Contractor shall perform milling in Span d first and shall monitor the underside of the existing concrete deck panels for damage. If any damage occurs, Contractor shall cease milling operation and notify the Engineer.

Cost of architectural treatment for the median curb shall be included in the price bid for Architectural Treatment.

For additional information of median curb architectural treatment see general notes on sheet 2.

North overhang was not designed for traffic impact on barrier.

The Contractor shall measure the clear distance between girder ends and face of pier cap wall at Span c, Pier 3 and provide to the Engineer.

For additional deck reinforcing steel details, see sheets 37 and 63 thru 68.

For details of reinforcing steel in raised median, see sheet 69.

For pedestrian fence PF-6 details, see sheet 76.

For CPSR-2 railing, see sheets 77 thru 80.

For BPB-3 parapet details, see sheet 82.

For BPR-1 pedestrian railing, see sheet 84.

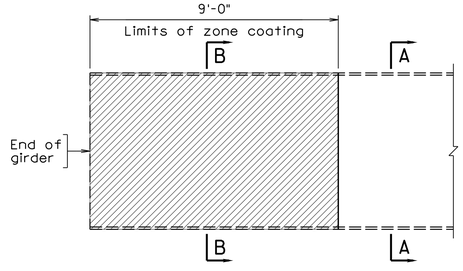

ELEVATION

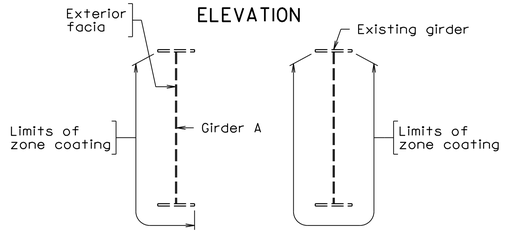

SECTION A-A SECTION B-B
ZONE COATING LIMITS
Not to scale

COMMONWEALTH OF VIRGINIA
JEREMY SCHLUSSEL
Lic. No. 033974
PROFESSIONAL ENGINEER
Jeremy Schlussel
2022.07.08 18:17:01 -04'00'
WHITMAN REQUARDT & ASSOCIATES
RICHMOND, VA
STRUCTURAL ENGINEER

No.	Description	Date
	Revisions	

COMMONWEALTH OF VIRGINIA
DEPARTMENT OF TRANSPORTATION

STRUCTURE AND BRIDGE DIVISION

TRANSVERSE SECTION 1 OF 2

Designed: MRD	Date	Plan No.	Sheet No.
Drawn: MRD	July 2022	257-38A	36 of 125
Checked: JDC			

© 2022, Commonwealth of Virginia

Scale: 3/16" = 1'-0" unless otherwise noted.

257-38A_036.dgn

STATE	FEDERAL AID		STATE		SHEET NO.
	ROUTE	PROJECT	ROUTE	PROJECT	
VA.	—		95	0095-076-299, B688	37

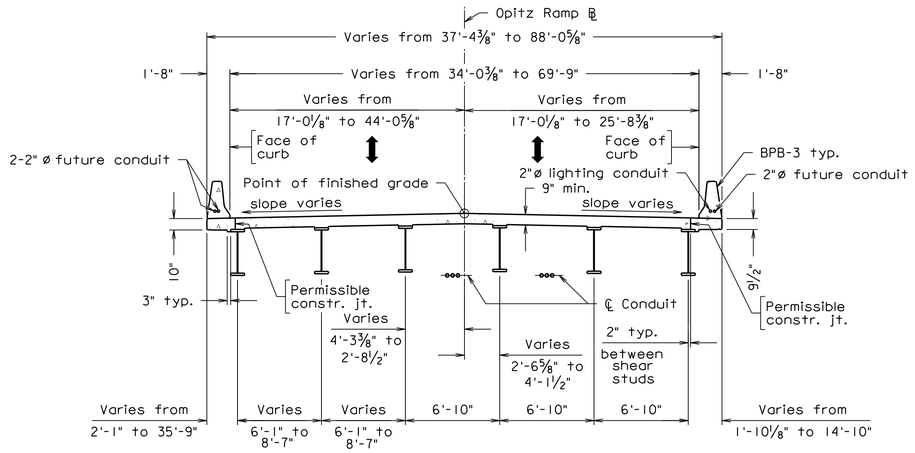

OPITZ BLVD. RAMP TRANSVERSE SECTION

Girders U, V, W and X not shown.

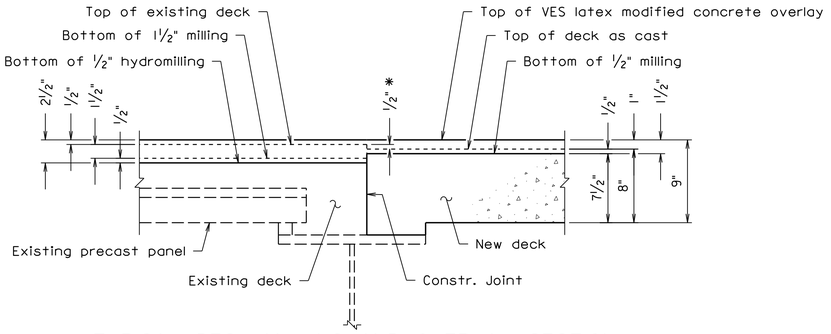

TYPICAL DECK MILLING AND OVERLAY SECTION AT CONSTRUCTION JOINT

Detail similar at all longitudinal constr. joints.
Not to scale

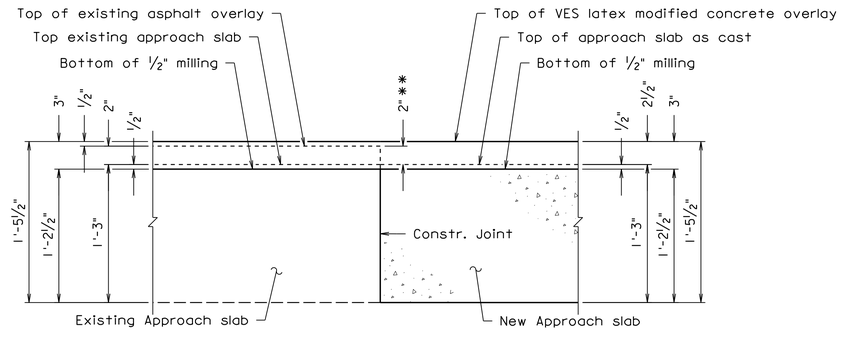

TYPICAL APPROACH SLAB MILLING AND OVERLAY SECTION AT CONSTRUCTION JOINT

Detail similar at all longitudinal constr. joints.
Not to scale

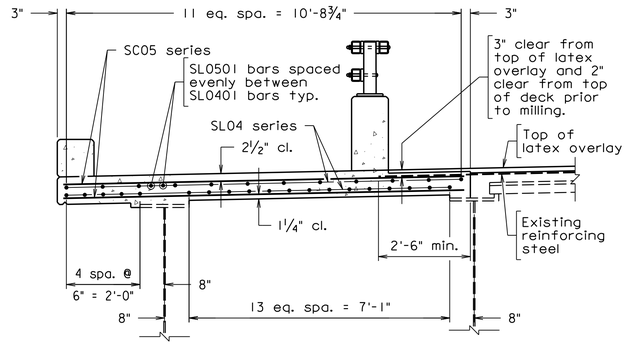

PART SECTION - LEFT OF OPITZ BLVD. ℄

Scale: ½" = 1'-0"

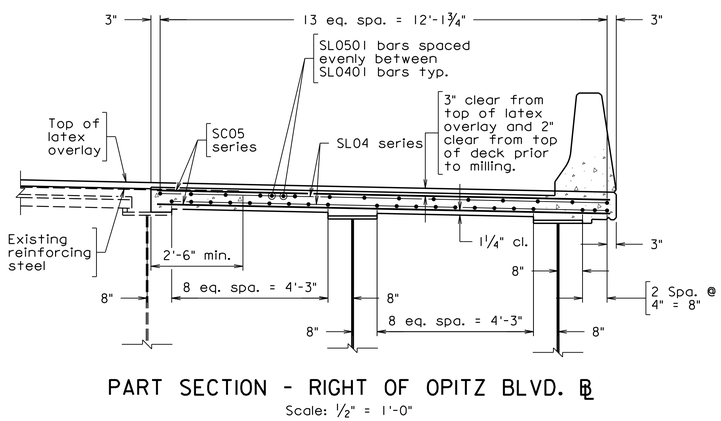

PART SECTION - RIGHT OF OPITZ BLVD. ℄

Scale: ½" = 1'-0"

Notes:

Bolster in Spans b, c and e are anticipated to be larger than 4 inches and additional reinforcing steel is likely to be required. For bolsters larger than 4 inches see typical bolster reinforcing detail.

If bolster exceeds 7 inches, Contractor shall notify the Engineer prior to pouring the deck.

For additional deck reinforcing steel details, see sheet 64 and 67.

For BPB-3 concrete parapet details, see sheet 82 and 83.

* Top of cast deck shall provide a taper to match existing deck slab height at construction joint to allow for smooth riding surface in vehicle wheel path during later stages of construction. This taper will be in the milling limits and will be removed during the milling operation.

** Contractor shall make up height difference between existing and top of cast approach slab with temporary pavement. Temporary pavement shall be removed during milling operation.

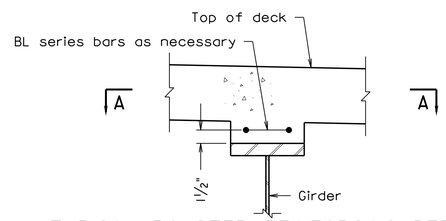

TYPICAL BOLSTER REINFORCING DETAIL

Not to scale

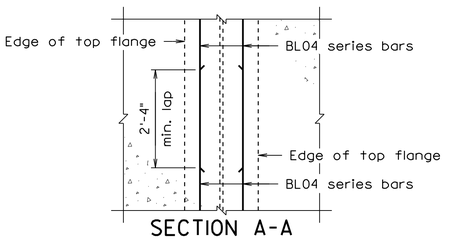

SECTION A-A

Not to scale

Girder	Mark	No.	Length
Girder M	BL0401	18	40'-0"
Girder N	BL0401	18	40'-0"
Girder O	BL0401	2	40'-0"
Girder P	BL0401	2	40'-0"
Girder Q	BL0401	2	40'-0"
Girder R	BL0401	2	40'-0"
Girder S	BL0401	2	40'-0"
Girder T	BL0401	2	40'-0"
Girder U	BL0402	2	31'-0"
Girder V	BL0403	2	14'-0"
Girder W	BL0402	2	31'-0"
Girder X	BL0403	2	14'-0"

Adjust lap length for BL0401 bars over Girders M and Girder N to match girder length.

Field cut bars to match girder length of remaining Girders.

COMMONWEALTH OF VIRGINIA
JEREMY SCHLUSSEL
Lic. No. 033974
PROFESSIONAL ENGINEER

Jeremy Schlussel
2022.07.08 18:17:34 -04'00'

WHITMAN REQUARDT & ASSOCIATES
RICHMOND, VA
STRUCTURAL ENGINEER

No.	Description	Date
	Revisions	

COMMONWEALTH OF VIRGINIA
DEPARTMENT OF TRANSPORTATION

STRUCTURE AND BRIDGE DIVISION

TRANSVERSE SECTION 2 OF 2

Designed: MRD	Date	Plan No.	Sheet No.
Drawn: MRD	July 2022	257-38A	37 of 125
Checked: LWK			

Scale: 3/16" = 1'-0" unless otherwise noted.

© 2022, Commonwealth of Virginia

257-38A_037.dgn

STATE	FEDERAL AID		STATE		SHEET NO.
	ROUTE	PROJECT	ROUTE	PROJECT	
VA.	—		95	0095-076-299, B688	38

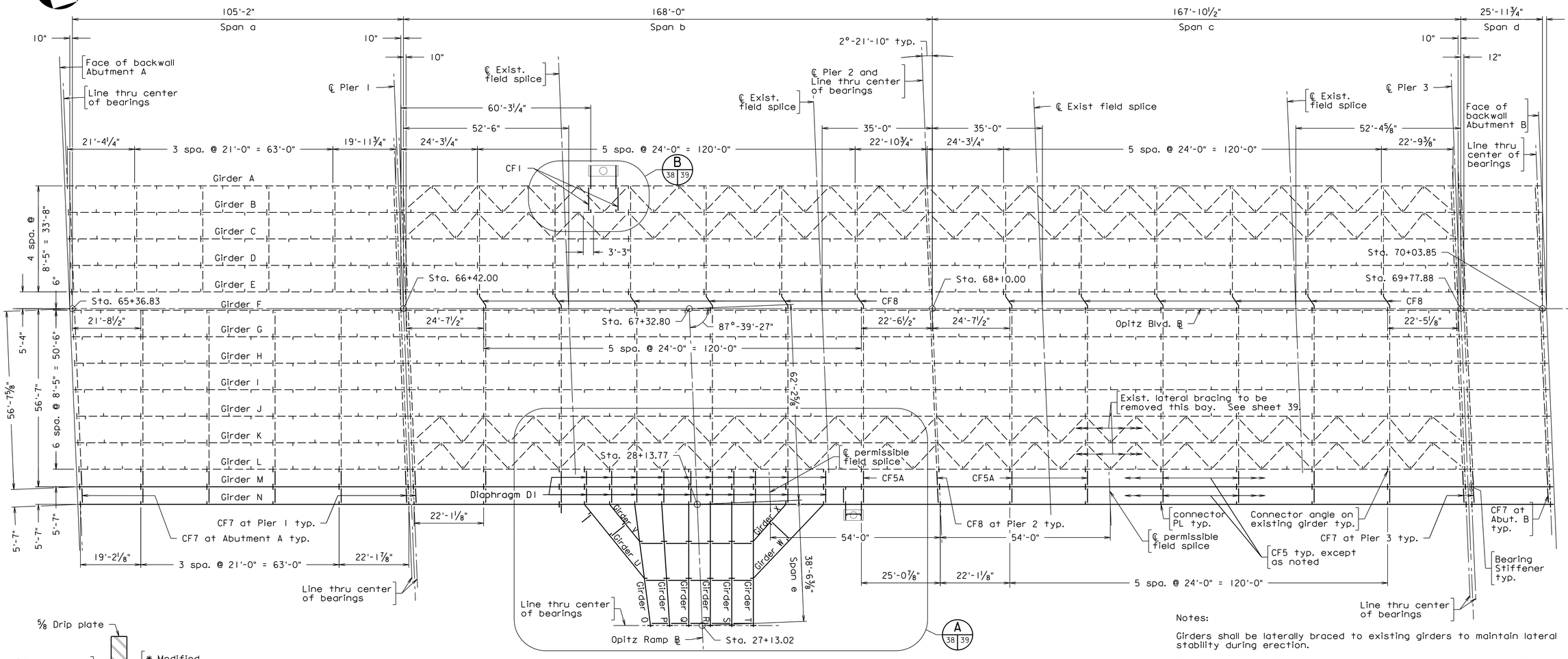

FRAMING PLAN

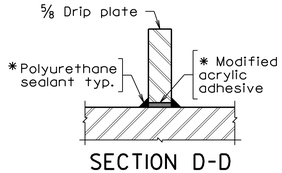

SECTION D-D
Not to scale

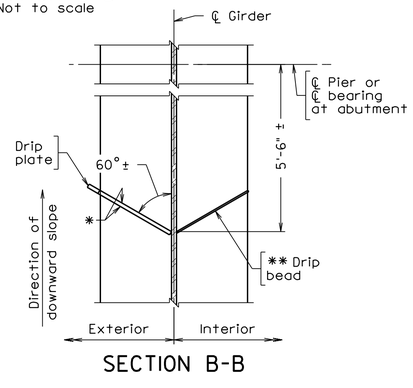

SECTION B-B

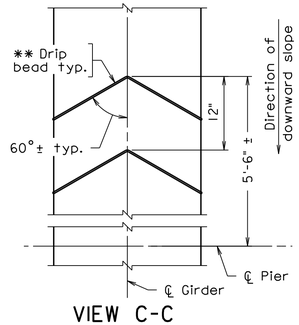

VIEW C-C

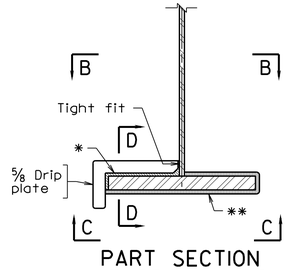

PART SECTION AT DRIP PLATE

* Drip plate is to be set in bed of modified acrylic adhesive where plate makes contact with girder bottom flange and web. Apply ¼" bead of polyurethane, or other approved sealant all around.

** Apply bead of polyurethane, or other approved sealant all around bottom flange as shown in Drip bead detail.

Scale: 1/16" = 1'-0"

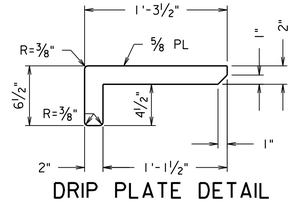

DRIP PLATE DETAIL
Scale: 1½" = 1'-0"

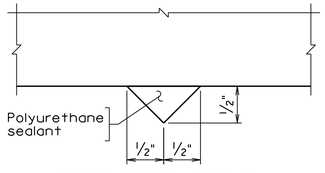

DRIP BEAD DETAIL
Not to scale

Notes:

Girders shall be laterally braced to existing girders to maintain lateral stability during erection.

All components in Spans b, c and e shall be fully assembled by the fabricator for drilling of splice and girder connection bolt holes including girder connections, traffic signal supports and deck overhang supports to ensure proper fit-up.

Polyurethane, or other approved sealant shall conform to FS TT-S-00230C, Type II, Class A, see VDOT Specs. Sec. 407.06(I).

The cost for modified acrylic adhesive and polyurethane sealant shall be included in other bid items.

Contractor and or fabricator may elect to field drill bolt holes as necessary to facilitate steel fit-up. Holes to be field drilled shall be noted on shop drawings.

For girder details, see sheets 40 thru. 57

For bolted splice details, see sheet 58.

257-38A_038.dgn

COMMONWEALTH OF VIRGINIA
JEREMY SCHLUSSEL
Lic. No. 033974
PROFESSIONAL ENGINEER

Jeremy Schlussel
2022.07.08 18:18:27 -04'00'

WHITMAN REQUARDT & ASSOCIATES
RICHMOND, VA
STRUCTURAL ENGINEER

© 2022, Commonwealth of Virginia

No.	Description	Date
	Revisions	

COMMONWEALTH OF VIRGINIA
DEPARTMENT OF TRANSPORTATION

STRUCTURE AND BRIDGE DIVISION

FRAMING PLAN
1 OF 2

Designed: MRD	Date	Plan No.	Sheet No.
Drawn: MRD	July 2022	257-38A	38 of 125
Checked: JDC			

STATE	FEDERAL AID		STATE		SHEET NO.
	ROUTE	PROJECT	ROUTE	PROJECT	
VA.	—		95	0095-076-299, B688	39

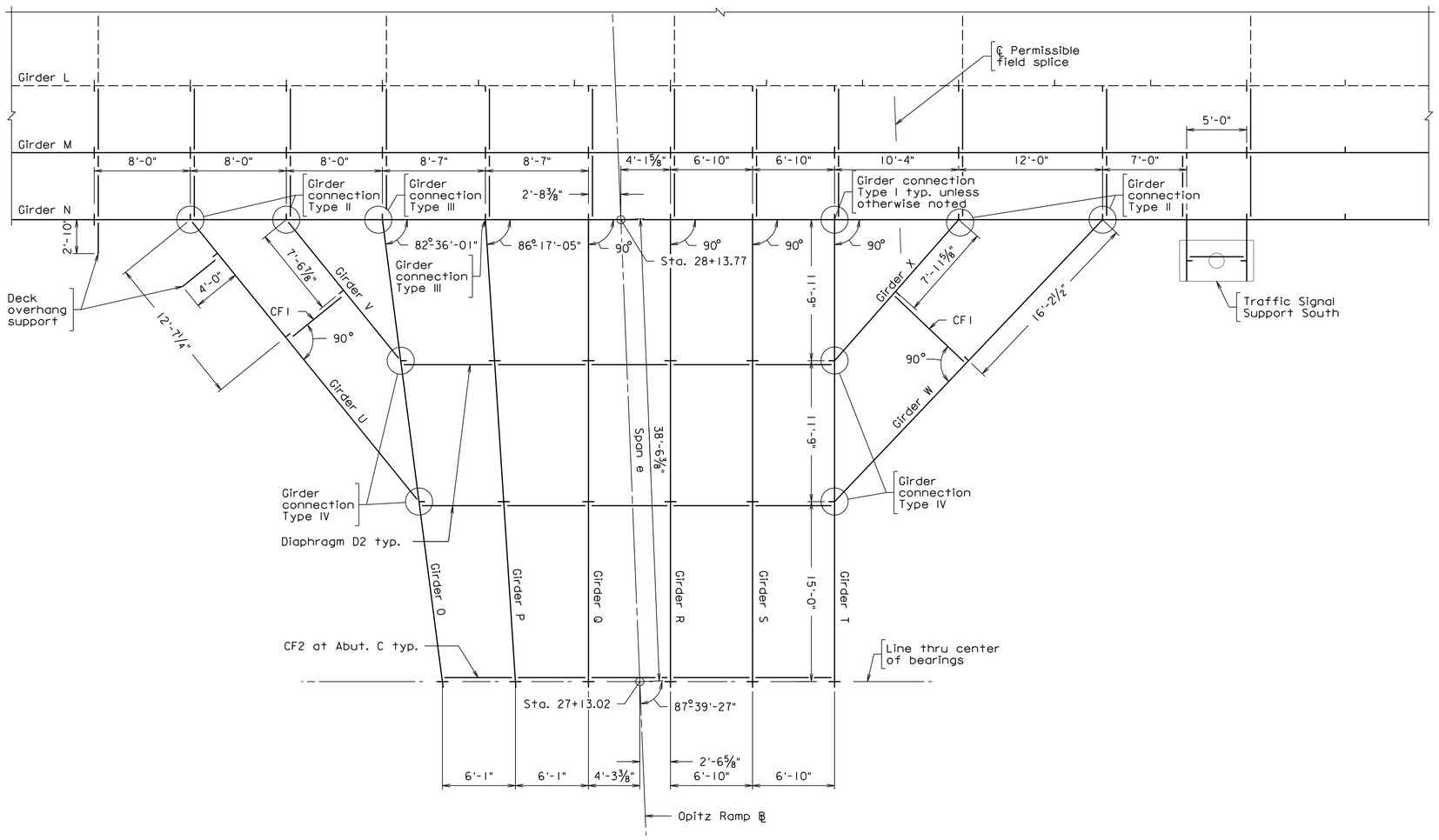

DETAIL A (38 | 39)

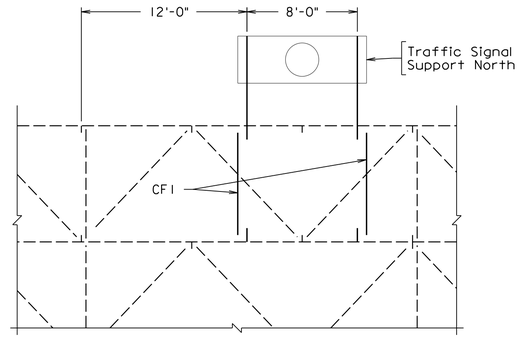

DETAIL B (38 | 39)

Notes:

All components in Spans b, c and e shall be fully assembled by the fabricator for drilling of splice and girder connection bolt holes including girder connections, traffic signal supports and deck overhang supports to ensure proper fit-up.

Contractor shall be responsible for field fit-up of steel.

For girder details, see sheet 43.

For girder connection details, see sheets 54, 55, 56 and 57.

For deck overhang support at Girder N and Girder U, see sheet 61

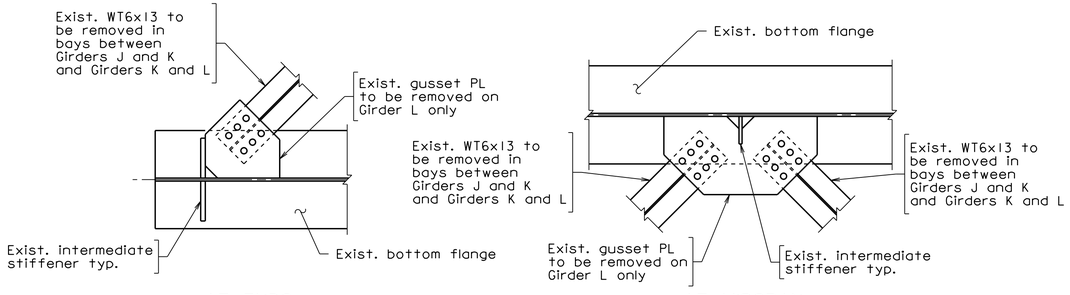

AT ENDS AT MIDSPAN

LATERAL BRACING REMOVAL DETAIL

Lateral Bracing Removal Notes:

Remove existing members as indicated in Lateral Bracing Removal Detail. Lateral bracing shall be removed prior to installation of Girders M and N.

Existing WT6x13 shall be removed by removing existing bolts.

Existing gusset plates and welds indicated to be removed shall be removed flush to the web by approved field cutting or grinding methods and all of lateral bracing disposed in accordance with Section 413 of the Specifications. All final striations shall be parallel to the girder.

All steel surfaces at gusset plate removal shall be prepared in accordance with Section 411 of the Specifications.

The Contractor shall submit lateral bracing removal plan for approval.

Areas on existing Girder where gusset plate was removed and bolt holes remaining, shall be zone coated and paid for by Zone Coating.

The cost for removal of lateral bracing and preparing remaining surfaces shall be included in bid price for Remove Portion of Existing Structure.

COMMONWEALTH OF VIRGINIA
JEREMY SCHLUSSEL
Lic. No. 033974
PROFESSIONAL ENGINEER

Jeremy Schlussel
2022.07.08 18:14:16 -04'00'

WHITMAN REQUARDT & ASSOCIATES
RICHMOND, VA
STRUCTURAL ENGINEER

Scale: 3/16" = 1'-0" unless otherwise noted.

© 2022, Commonwealth of Virginia

No.	Description	Date
	Revisions	

COMMONWEALTH OF VIRGINIA
DEPARTMENT OF TRANSPORTATION

STRUCTURE AND BRIDGE DIVISION

FRAMING PLAN 2 OF 2

Designed: MRD	Date	Plan No.	Sheet No.
Drawn: MRD	July 2022	257-38A	39 of 125
Checked: LDC			

257-38A_039.dgn

STATE	FEDERAL AID		STATE		SHEET NO.
	ROUTE	PROJECT	ROUTE	PROJECT	
VA.	—		95	0095-076-299, B688	40

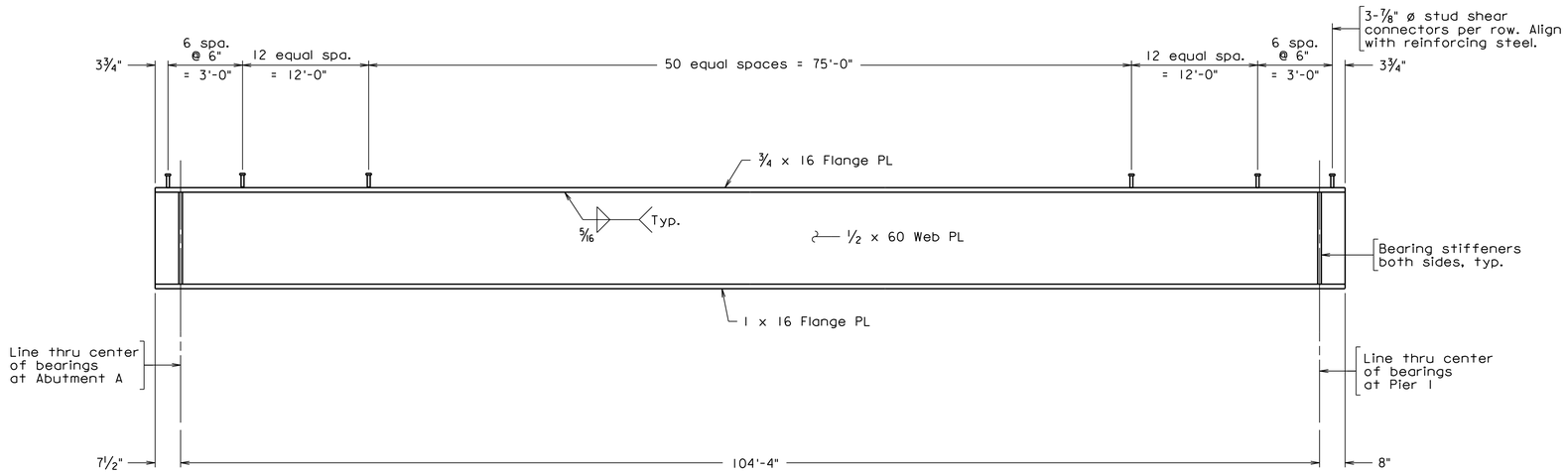

GIRDER ELEVATION

Notes:

For spacing of intermediate diapragm connector plates, see Framing Plan, sheet 38.

The bottom flange and web are areas of tensile stress for Charpy V-Notch impact requirements.

Symbol ø = diameter.

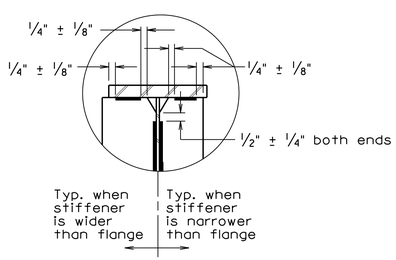

DETAIL A

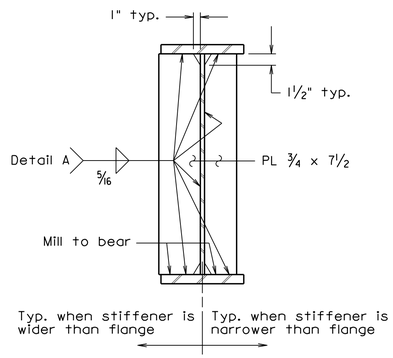

BEARING STIFFENERS

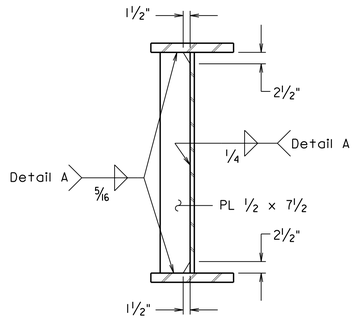

CROSS FRAME CONNECTOR PLATE

SGDET1 MOD. 04-30-2020

257-38A_040.dgn

JEREMY SCHLUSSEL
Lic. No. 033974
COMMONWEALTH OF VIRGINIA
PROFESSIONAL ENGINEER

Jeremy Schlussel
2022.07.08 18:20:30 -04'00'

WHITMAN REQUARDT & ASSOCIATES
RICHMOND, VA
STRUCTURAL ENGINEER

Not to scale unless otherwise noted

© 2022, Commonwealth of Virginia

No.	Description	Date
	Revisions	

COMMONWEALTH OF VIRGINIA
DEPARTMENT OF TRANSPORTATION

STRUCTURE AND BRIDGE DIVISION

GIRDER DETAILS SPAN a

Designed: RW
Drawn: KM
Checked: AR

Date	Plan No.	Sheet No.
July 2022	257-38A	40 of 125

STATE	FEDERAL AID		STATE		SHEET NO.
	ROUTE	PROJECT	ROUTE	PROJECT	
VA.	—		95	0095-076-299, B688	41

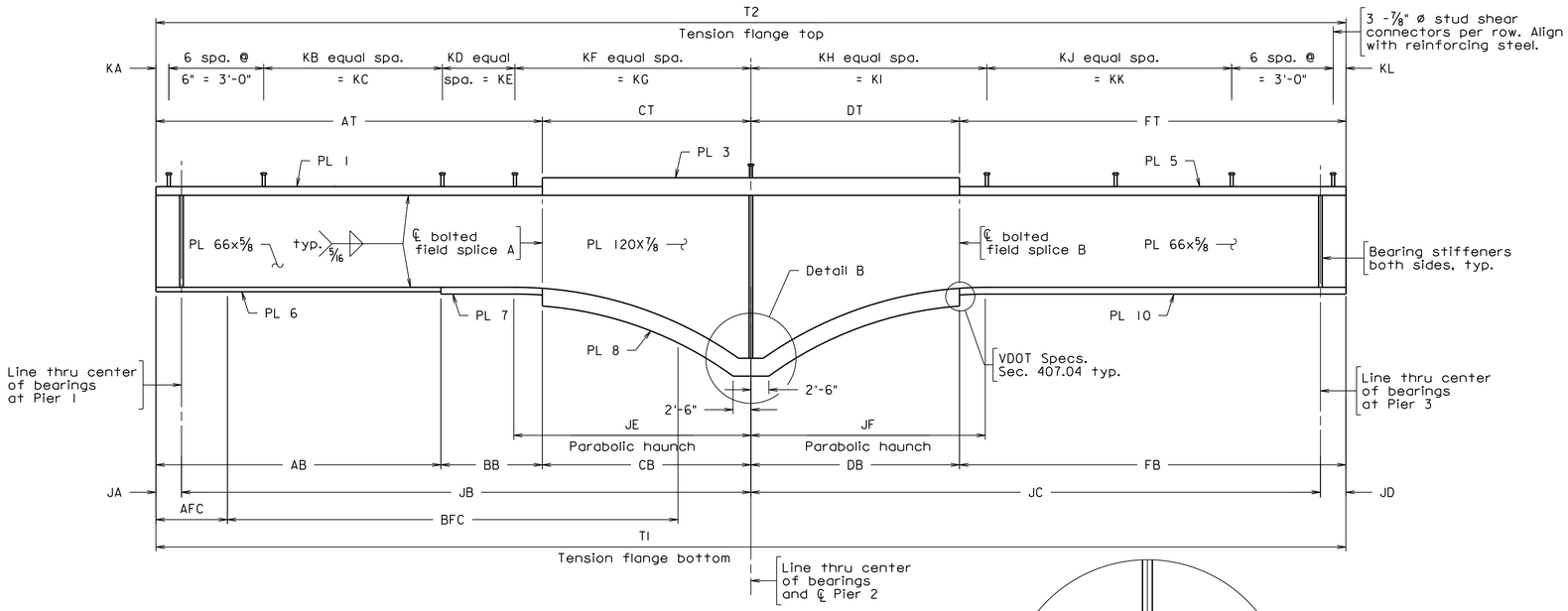

GIRDER ELEVATION

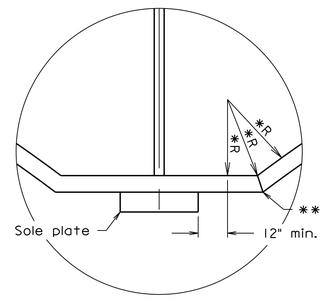

DETAIL B

* Radius to be determined by the fabricator. As alternative, the fabricator may elect to cut and shop weld the parabolic web plate to the bottom flange plate.

** At the transition from the girder over the pier to the beginning of the parabolic web, the fabricator may either bend the flange or place a CJP weld in the bottom flange between the straight and parabolic girder sections.

Notes:

For spacing of cross frames and intermediate diaphragm connector plates, see Framing Plan, sheet 38.

Spacing of stud shear connectors at bolted field splices, shall be adjusted to clear edges of splice plates and locations of bolts allowing for proper clearance to meet bolt tightening requirements. This adjusted spacing shall be shown on the shop drawings.

The top and bottom flanges as shown in Girder Elevation, the web and all splice plates are areas of tensile stress for Charpy V-Notch impact requirements.

If the Contractor chooses to eliminate one or more bolted field splice(s), the Contractor shall submit their shipping and erection plans along with the shop drawings to the Department for review and approval. The shipping and erection plans shall be signed and sealed by a Professional Engineer, holding a valid license to practice engineering in the Commonwealth of Virginia. Approval for eliminating of a bolted field splice does not imply issuance of a hauling permit.

Symbol ø = diameter.

Webs and flanges as noted in the FCM Table shall be fabricated, tested and inspected in accordance with fracture critical requirements and in accordance with Clause 12 of the AWS-D1.5 Bridge Welding Code.

All flanges and webs are considered tension members.

All CJP welds shall be inspected by radiographic and ultrasonic testing.

Parabolic Haunch:

Parabolic Haunch Web Depth is defined as:

$H = H_{min} + (A \times X^2)$

Where:
H = Web depth (inches)
H_{min} = Minimum Web depth at end of hauch (inches)
A = Constant at particular haunch (see table)
X = Distance from end of hauch at least web depth (feet)

CONSTANT A		
Pier	Span	A
2	b	0.01578
2	c	0.01578

PLATE DIMENSION TABLE											
Girder	Web PL	PL 1	PL 2	PL 3	PL 4	PL 5	PL 6	PL 7	PL 8	PL 9	PL 10
M	Varies	18x1½	—	20x1½	—	16x1½	18x1½	18x2¼	20x1¾	—	18x1½
N	Varies	18x1½	—	20x1½	—	16x1½	18x1½	18x2¼	20x1¾	—	18x1½

GIRDER DIMENSION TABLE												
Girder	AB	AT	BB	BT	CB	CT	DB	DT	EB	ET	FB	FT
M	42'-7½"	113'-9½"	71'-2"	—	54'-0"	54'-0"	54'-0"	54'-0"	—	—	113'-8"	113'-8"
N	42'-7½"	113'-9½"	71'-2"	—	54'-0"	54'-0"	54'-0"	54'-0"	—	—	113'-8"	113'-8"

GIRDER DIMENSION TABLE																	
Girder	JA	JB	JC	JD	JE	JF	KA	KB	KC	KD	KE	KF	KG	KH	KI	KJ	KK	KL
M	7½"	167'-2"	167'-0½"	7½"	58'-6"	58'-6"	3"	20	25'-0"	60	105'-0"	18	34'-6½"	26	50'-8"	91	113'-9"	3"
N	7½"	167'-2"	167'-0½"	7½"	58'-6"	58'-6"	3"	18	27'-0"	—	—	69	137'-6½"	72	143'-5"	12	21'-0"	3"

TENSION FLANGES		
Girder	T1	T2
M	335'-5½"	335'-5½"
N	335'-5½"	335'-5½"

FCM TABLE		
Girder	AFC	BFC
M	30'-0"	125'-0"
N	30'-0"	125'-0"

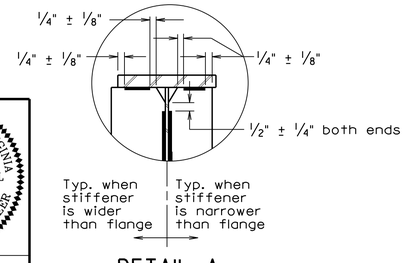

DETAIL A

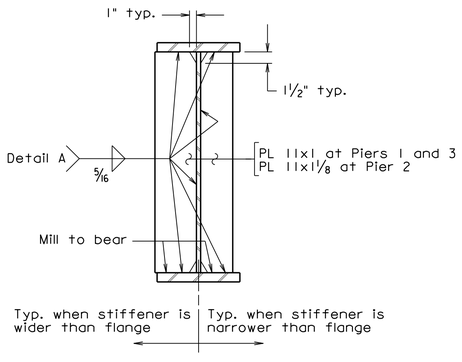

BEARING STIFFENERS

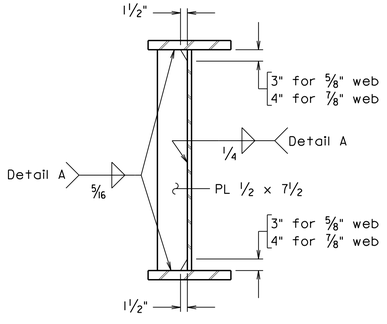

CROSS FRAME CONNECTOR PLATE

For diaphragm connector plate sizes at ramp girder connections, see sheets 55 through 57.

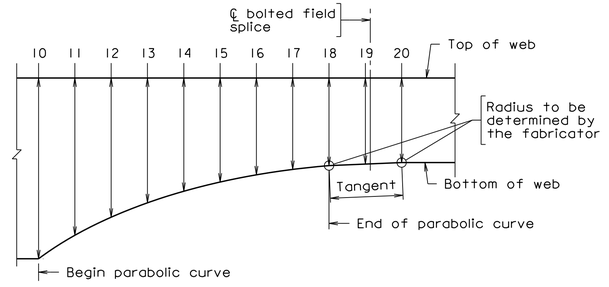

GIRDER HAUNCH DETAIL

GIRDER HAUNCH DIMENSION TABLE											
Point	10	11	12	13	14	15	16	17	18	19	20
Web depth	120"	109¾"	100⅜"	92⅞"	85⅞"	79½"	74⅝"	70⅞"	68¾"	67⅛"	66"

257-38A_041.dgn

SGDET2 MOD 04-30-2020

COMMONWEALTH OF VIRGINIA
JEREMY SCHLUSSEL
Lic. No. 033974
PROFESSIONAL ENGINEER

Jeremy Schlussel
2022.07.08 18:27:48 -04'00'

WHITMAN REQUARDT & ASSOCIATES
RICHMOND, VA
STRUCTURAL ENGINEER

No.	Description	Date
	Revisions	

COMMONWEALTH OF VIRGINIA
DEPARTMENT OF TRANSPORTATION

STRUCTURE AND BRIDGE DIVISION

GIRDER DETAILS SPANS b AND c

Designed: MJJ	Date	Plan No.	Sheet No.
Drawn: MJJ	July 2022	257-38A	41 of 125
Checked: MRD			

© 2022, Commonwealth of Virginia

Not to scale unless otherwise noted

STATE	FEDERAL AID		STATE		SHEET NO.
	ROUTE	PROJECT	ROUTE	PROJECT	
VA.	—		95	0095-076-299, B688	42

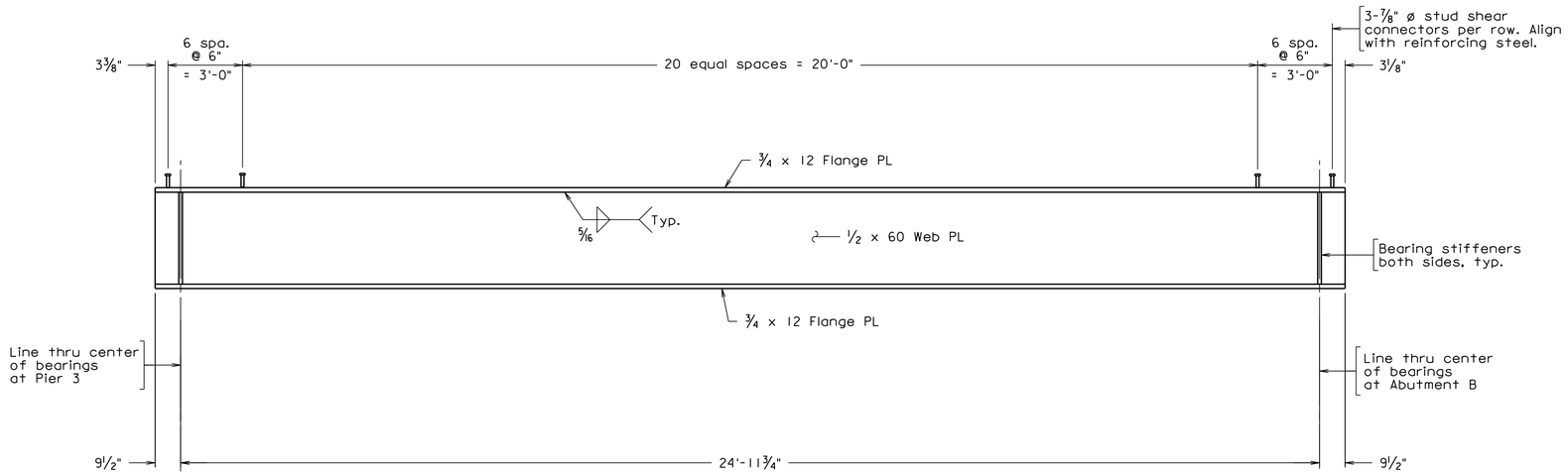

GIRDER ELEVATION

Notes:

The bottom flange and web are areas of tensile stress for Charpy V-Notch impact requirements.

Symbol ø = diameter.

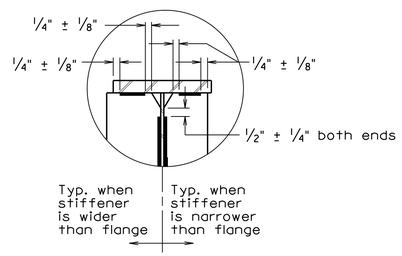

DETAIL A

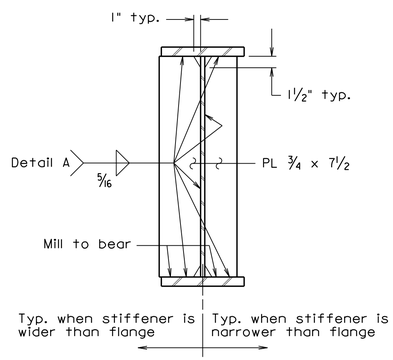

BEARING STIFFENERS

257-38A_042.dgn

04-30-2020

SGDET I

JEREMY SCHLUSSEL
Lic. No. 033974
COMMONWEALTH OF VIRGINIA
PROFESSIONAL ENGINEER

Jeremy Schlussel
2022.07.08 18:27:26 -04'00'

WHITMAN REQUARDT & ASSOCIATES
RICHMOND, VA
STRUCTURAL ENGINEER

Not to scale unless otherwise noted

© 2022, Commonwealth of Virginia

No.	Description	Date
	Revisions	

COMMONWEALTH OF VIRGINIA
DEPARTMENT OF TRANSPORTATION

STRUCTURE AND BRIDGE DIVISION

GIRDER DETAILS SPAN d

Designed: RW	Date	Plan No.	Sheet No.
Drawn: KM	July 2022	257-38A	42 of 125
Checked: AR			

STATE	FEDERAL AID		STATE		SHEET NO.
	ROUTE	PROJECT	ROUTE	PROJECT	
VA.	—		95	0095-076-299, B688	43

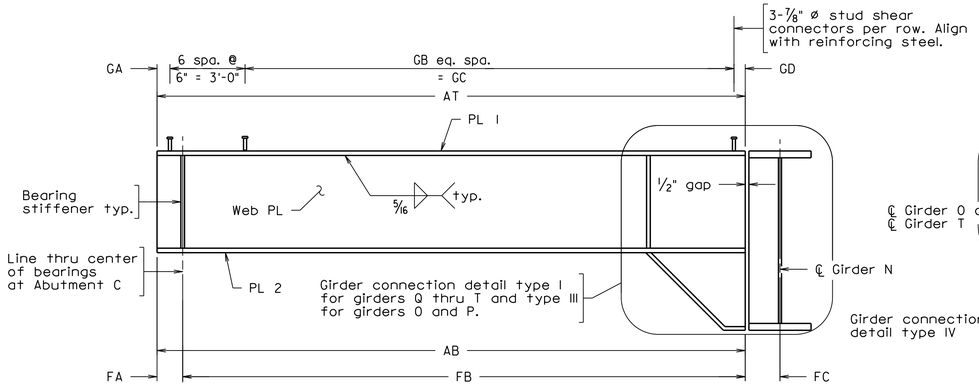

GIRDER ELEVATION
GIRDERS O THRU T

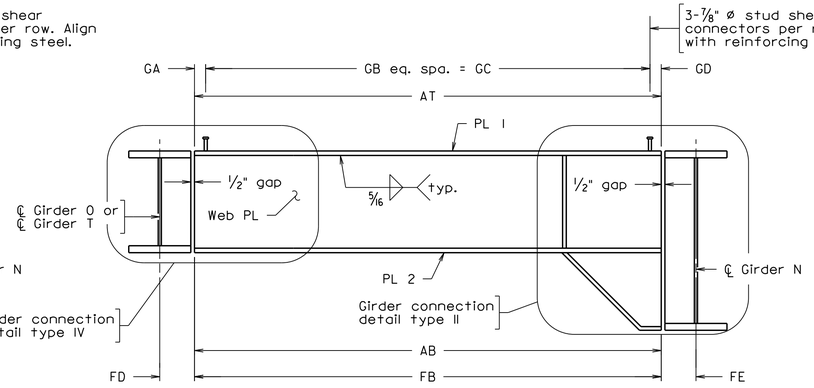

GIRDER ELEVATION
GIRDERS U THRU X

Notes:

Spacing of stud shear connectors at bolted field splices and girder connections, shall be adjusted to clear edges of splice plates and locations of bolts allowing for proper clearance to meet bolt tightening requirements. This adjusted spacing shall be shown on the shop drawings.

The bottom flange, web, and all splice plates are areas of tensile stress for Charpy V-Notch impact requirements.

Webs, flanges and girder connections including splice plates shall be fabricated, tested and inspected in accordance with fracture critical requirements and in accordance with Clause 12 of the AWS-D1.5 Bridge Welding Code.

All flanges and webs are considered tension members.

The fabricator shall take care when welding flange to web to prevent distortion in flange to ensure tight connections in girder connections.

Symbol ø = diameter.

For spacing of intermediate diaphragm connector plates, see Framing Plan, sheet 39.

For girder connection detail type I, see sheet 55.

For girder connection detail type II, see sheet 56.

For girder connection detail type III, see sheet 57.

For girder connection detail type IV, see sheet 54.

PLATE DIMENSION TABLE			
Girder	Web PL	PL 1	PL 2
O	36 x 1/2	12 x 3/4	14 x 1 1/8
P	36 x 1/2	12 x 3/4	14 x 7/8
Q	36 x 1/2	12 x 3/4	14 x 7/8
R	36 x 1/2	12 x 3/4	14 x 7/8
S	36 x 1/2	12 x 3/4	14 x 7/8
T	36 x 1/2	12 x 3/4	14 x 1 1/8
U	36 x 1/2	12 x 3/4	14 x 7/8
V	36 x 1/2	12 x 3/4	14 x 7/8
W	36 x 1/2	12 x 3/4	14 x 7/8
X	36 x 1/2	12 x 3/4	14 x 7/8

GIRDER DIMENSION TABLE					
Girder	FA	FB	FC	FD	FE
O	9 1/8"	38'-0 1/4"	9 5/8"	———	———
P	9"	37'-9 3/8"	9 1/2"	———	———
Q	9"	37'-8 1/2"	9 1/2"	———	———
R	9"	37'-8 1/2"	9 1/2"	———	———
S	9"	37'-8 1/2"	9 1/2"	———	———
T	9"	37'-8 1/2"	9 1/2"	———	———
U	———	27'-11 7/8"	———	1'-2 3/4"	1'-0 3/8"
V	———	12'-10 1/2"	———	1'-2 3/4"	1'-0 3/8"
W	———	30'-2 1/8"	———	1'-0 1/8"	1'-2 1/2"
X	———	13'-5 1/2"	———	1'-0 1/8"	1'-2 1/8"

GIRDER DIMENSION TABLE						
Girder	AB	AT	GA	GB	GC	GD
O	38'-9 3/8"	38'-9 3/8"	3"	39	35'-3 3/8"	3"
P	38'-6 3/8"	38'-6 3/8"	3"	39	35'-0 3/8"	3"
Q	38'-5 1/2"	38'-5 1/2"	3"	39	34'-11 1/2"	3"
R	38'-5 1/2"	38'-5 1/2"	3"	39	34'-11 1/2"	3"
S	38'-5 1/2"	38'-5 1/2"	3"	39	34'-11 1/2"	3"
T	38'-5 1/2"	38'-5 1/2"	3"	39	34'-11 1/2"	3"
U	27'-11 7/8"	27'-11 7/8"	3"	36	27'-11 7/8"	3"
V	12'-10 1/2"	12'-10 1/2"	3"	21	12'-10 1/2"	3"
W	30'-2 1/8"	30'-2 1/8"	3"	38	30'-2 1/8"	3"
X	13'-5 1/2"	13'-5 1/2"	3"	21	13'-5 1/2"	3"

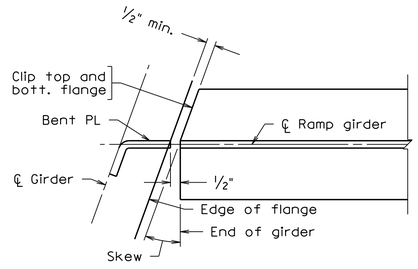

FLANGE CLIP DETAIL

FLANGE CLIP DIMENSION TABLE		
Girder	Location	Skew
O	Girder N	07°-23'-59"
P	Girder N	03°-42'-55"
U	Girder N	39°-01'-57"
V	Girder N	39°-01'-57"
W	Girder N	43°-32'-30"
X	Girder N	41°-18'-08"
U	Girder O	58°-22'-02"
V	Girder O	58°-22'-02"
W	Girder T	46°-27'-30"
X	Girder T	48°-41'-50"

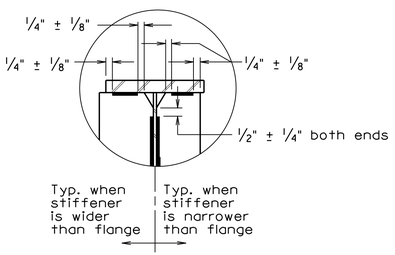

DETAIL A

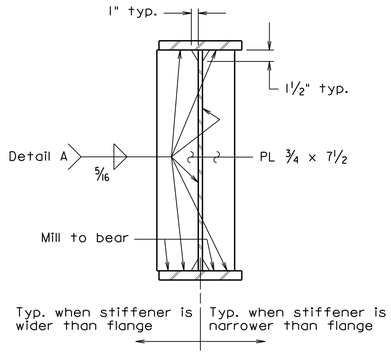

BEARING STIFFENERS

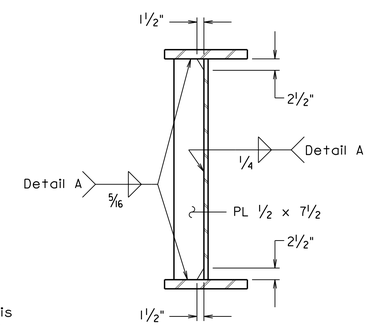

CROSS FRAME CONNECTOR PLATE

257-38A_043.dgn

SGDET1 MOD. 04-30-2020

COMMONWEALTH OF VIRGINIA
JEREMY SCHLUSSEL
Lic. No. 033974
PROFESSIONAL ENGINEER

Jeremy Schlussel
2022.07.08 18:28:24 -04'00'

WHITMAN REQUARDT & ASSOCIATES
RICHMOND, VA
STRUCTURAL ENGINEER

Not to scale unless otherwise noted

© 2022, Commonwealth of Virginia

No.	Description	Date
	Revisions	

COMMONWEALTH OF VIRGINIA
DEPARTMENT OF TRANSPORTATION

STRUCTURE AND BRIDGE DIVISION

GIRDER DETAILS
SPAN e

Designed: WS	Date	Plan No.	Sheet No.
Drawn: MWL	July 2022	257-38A	43 of 125
Checked: MRD			

STATE	FEDERAL AID		STATE		SHEET NO.
	ROUTE	PROJECT	ROUTE	PROJECT	
VA.	—		95	0095-076-299, B688	44

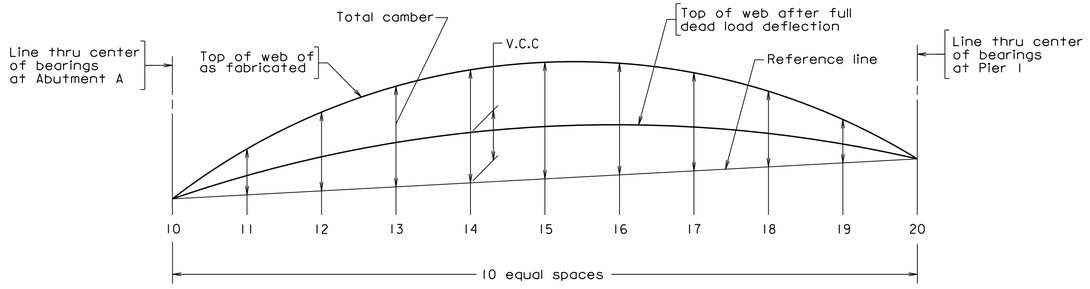

	Point	10	11	12	13	14	15	16	17	18	19	20
Girder M	$\triangle_S$	0''	3/16''	3/8''	1/2''	9/16''	5/8''	9/16''	1/2''	3/8''	3/16''	0''
	$\triangle'_S$	0''	9/16''	1''	1 3/8''	1 5/8''	1 3/4''	1 5/8''	1 7/16''	1''	9/16''	0''
	$\triangle_C$	0''	1/16''	1/8''	3/16''	3/16''	3/16''	3/16''	3/16''	1/8''	1/16''	0''
	V.C.C.	0''	1 3/16''	2 1/4''	3 1/4''	4 1/8''	4 15/16''	5 5/8''	6 3/16''	6 11/16''	7 1/8''	7 3/8''
	Total	0''	2''	3 3/4''	5 5/16''	6 1/2''	7 1/2''	8''	8 5/16''	8 3/16''	7 15/16''	7 3/8''
Girder N	$\triangle_S$	0''	1/4''	3/8''	9/16''	5/8''	5/8''	5/8''	1/2''	3/8''	3/16''	0''
	$\triangle'_S$	0''	1/2''	15/16''	1 1/4''	1 1/2''	1 9/16''	1 1/2''	1 5/16''	15/16''	1/2''	0''
	$\triangle_C$	0''	1/8''	3/16''	1/4''	5/16''	5/16''	5/16''	1/4''	3/16''	1/8''	0''
	V.C.C.	0''	1 3/16''	2 1/4''	3 1/4''	4 1/8''	4 15/16''	5 5/8''	6 3/16''	6 11/16''	7 1/16''	7 3/8''
	Total	0''	2 1/16''	3 3/4''	5 5/16''	6 9/16''	7 7/16''	8 1/16''	8 1/4''	8 3/16''	7 7/8''	7 3/8''

CAMBER DIAGRAM

Reference line = line between top of web at Abutment A and top of web at Pier 1 (℄ bearing to ℄ bearing).

$\triangle_S$ = Deflection of girder from its own weight after erection including diaphragms, connectors, etc.

$\triangle'_S$ = Deflection of girder from dead load of concrete deck slab, bolster and construction tolerance.

$\triangle_C$ = Deflection of girder from permanent dead load added after deck slab is cast (e.g. parapet).

V.C.C = Vertical curve camber = Distance between the reference line and top of web after full dead load deflection.

Total camber = $\triangle_S + \triangle'_S + \triangle_C$ + V.C.C.

Sign convention: Deflections are positive if downward; negative if upward.

V.C.C. is positive if the top of web after full dead load deflection is above the reference line; and negative if below the reference line.

Total camber is positive if the top of web as fabricated is above the reference line; and negative if below the reference line.

Diagram depicts all values being positive, and is not meant to reflect actual conditions.

257-38A_044.dgn

04-30-2020

SGCAM1

COMMONWEALTH OF VIRGINIA
JEREMY SCHLUSSEL
Lic. No. 033974
PROFESSIONAL ENGINEER

Jeremy Schlussel
2022.07.08 18:26:40 -04'00'

WHITMAN REQUARDT & ASSOCIATES
RICHMOND, VA
STRUCTURAL ENGINEER

Not to scale

© 2022, Commonwealth of Virginia

No.	Description	Date
	Revisions	

COMMONWEALTH OF VIRGINIA
DEPARTMENT OF TRANSPORTATION

STRUCTURE AND BRIDGE DIVISION

CAMBER DIAGRAM
SPAN a

Designed: KML	Date	Plan No.	Sheet No.
Drawn: CRR	July 2022	257-38A	44 of 125
Checked: KML			

STATE	FEDERAL AID		STATE		SHEET NO.
	ROUTE	PROJECT	ROUTE	PROJECT	
VA.	—		95	0095-076-299, B688	45

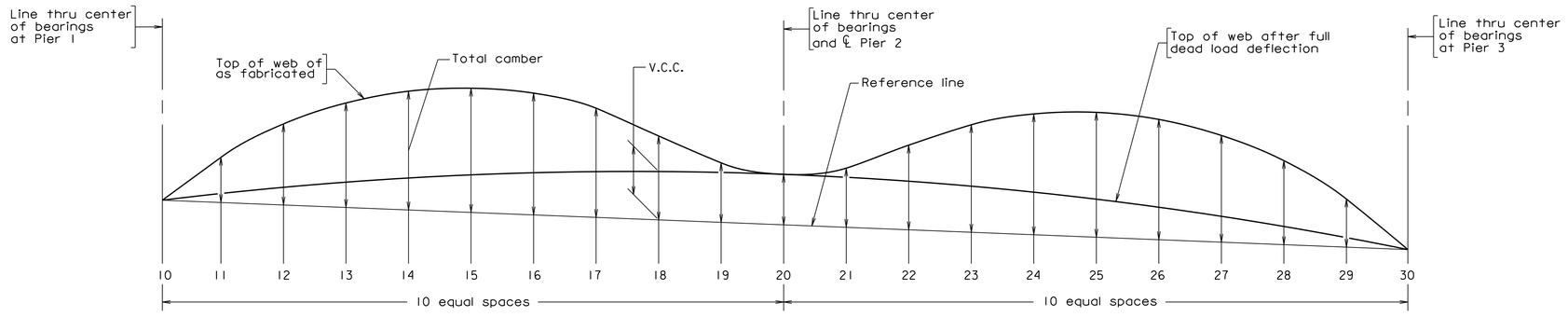

	Point	10	11	12	13	14	15	16	17	18	19	20	21	22	23	24	25	26	27	28	29	30
Girder M	$\triangle_S$	0''	1/4''	7/16''	9/16''	5/8''	5/8''	9/16''	3/8''	1/4''	1/8''	0''	-1/16''	0''	1/16''	1/8''	3/16''	1/4''	1/4''	3/16''	1/8''	0''
	$\triangle'_S$	0''	3/8''	11/16''	13/16''	13/16''	11/16''	1/2''	5/16''	1/8''	1/16''	0''	3/16''	3/8''	3/4''	1 1/16''	1 5/16''	1 7/16''	1 5/16''	1''	9/16''	0''
	$\triangle_C$	0''	1/4''	7/16''	9/16''	11/16''	11/16''	5/8''	1/2''	5/16''	1/8''	0''	-1/8''	-3/16''	-3/16''	-3/16''	-1/8''	0''	-1/16"	-1/16''	0''	0''
	V.C.C.	3'-8 1/16''	3'-8 5/16''	3'-8 5/16''	3'-8 1/16''	3'-7 1/2''	3'-6 3/4''	3'-5 11/16''	3'-4 7/16''	3'-2 7/8''	3'-1 1/8''	2'-11 1/16''	2'-8 1/16''	2'-6 1/8''	2'-3 5/16''	2'-0 3/16''	1'-8 1/16''	1'-5 3/16''	1'-1 5/16''	9 1/8''	4 11/16''	0''
	Total	3'-8 1/16''	3'-9 3/16''	3'-9 7/8''	3'-10''	3'-9 5/8''	3'-8 3/4''	3'-7 3/8''	3'-5 5/8''	3'-3 9/16''	3'-1 7/16''	2'-11 1/16''	2'-8 1/16''	2'-6 5/16''	2'-3 5/16''	2'-1 3/16''	1'-10 3/16''	1'-6 7/8''	1'-2 13/16''	10 1/4''	5 3/8''	0''
Girder N	$\triangle_S$	0''	5/16''	9/16''	11/16''	3/4''	3/4''	5/8''	7/16''	1/4''	1/8''	0''	-1/16''	0''	1/16''	1/8''	1/4''	5/16''	5/16''	1/4''	1/8''	0''
	$\triangle'_S$	0''	3/4''	1 1/4''	1 3/16''	1 5/8''	1 3/8''	1 1/8''	3/4''	3/8''	1/16''	0''	1/8''	7/16''	5/16''	1 3/8''	1 3/4''	1 7/8''	1 3/4''	1 3/8''	11/16''	0''
	$\triangle_C$	0''	1/4''	1/2''	5/8''	11/16''	11/16''	11/16''	9/16''	3/8''	3/16''	0''	-1/8''	-3/16''	-1/4''	-3/16''	-3/16''	0''	-1/16''	0''	0''	0''
	V.C.C.	3'-8 1/8''	3'-8 3/8''	3'-8 3/8''	3'-8 1/16''	3'-7 9/16''	3'-6 13/16''	3'-5 3/4''	3'-4 1/2''	3'-2 5/16''	3'-1 1/8''	2'-11 1/8''	2'-8 3/4''	2'-6 3/16''	2'-3 5/16''	2'-0 1/4''	1'-8 7/8''	1'-5 3/16''	1'-1 5/16''	9 1/8''	4 11/16''	0''
	Total	3'-8 1/8''	3'-9 11/16''	3'-10 11/16''	3'-10 15/16''	3'-10 5/8''	3'-9 5/8''	3'-8 3/16''	3'-6 1/4''	3'-3 15/16''	3'-1 1/2''	2'-11 1/8''	2'-8 11/16''	2'-6 7/16''	2'-4 1/16''	2'-1 3/16''	1'-10 11/16''	1'-7 3/8''	1'-3 5/16''	10 3/4''	5 1/2''	0''

CAMBER DIAGRAM

Reference line = line between top of web at Pier 1 and top of web at Pier 3 (℄ bearing to ℄ bearing).

$\triangle_S$ = Deflection of girder from its own weight after erection including diaphragms, connectors, etc.

$\triangle'_S$ = Deflection of girder from dead load of concrete deck slab, bolster and construction tolerance.

$\triangle_C$ = Deflection of girder from permanent dead load added after deck slab is cast (e.g. parapet).

V.C.C = Vertical curve camber = Distance between the reference line and top of web after full dead load deflection.

Total camber = $\triangle_S + \triangle'_S + \triangle_C$ + V.C.C.

Sign convention: Deflections are positive if downward; negative if upward.

V.C.C. is positive if the top of web after full dead load deflection is above the reference line; and negative if below the reference line.

Total camber is positive if the top of web as fabricated is above the reference line; and negative if below the reference line.

Diagram depicts all values being positive, and is not meant to reflect actual conditions.

257-38A_045.dgn

04-30-2020

SGCAM2

COMMONWEALTH OF VIRGINIA
JEREMY SCHLUSSEL
Lic. No. 033974
PROFESSIONAL ENGINEER

Jeremy Schlussel
2022.07.08 18:27:03 -04'00'

WHITMAN REQUARDT & ASSOCIATES
RICHMOND, VA
STRUCTURAL ENGINEER

Not to scale

© 2022, Commonwealth of Virginia

No.	Description	Date
	Revisions	

COMMONWEALTH OF VIRGINIA
DEPARTMENT OF TRANSPORTATION

STRUCTURE AND BRIDGE DIVISION

CAMBER DIAGRAM
SPANS b AND c

Designed: KML	Date	Plan No.	Sheet No.
Drawn: CRR	July 2022	257-38A	45 of 125
Checked: KML			

STATE	FEDERAL AID		STATE		SHEET NO.
	ROUTE	PROJECT	ROUTE	PROJECT	
VA.	—		95	0095-076-299, B688	46

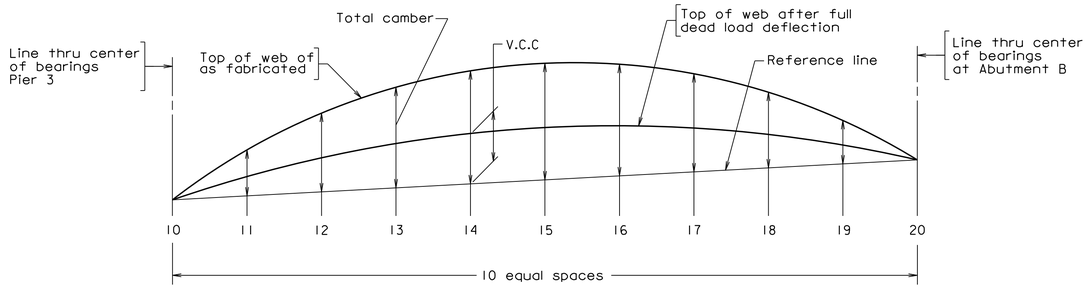

	Point	10	11	12	13	14	15	16	17	18	19	20
Girder M	$\triangle_s$	0''	0''	0''	0''	0''	0''	0''	0''	0''	0''	0''
	$\triangle'_s$	0''	0''	0''	0''	0''	0''	0''	0''	0''	0''	0''
	$\triangle_c$	0''	0''	0''	0''	0''	0''	0''	0''	0''	0''	0''
	V.C.C.	7 9/16''	6 13/16''	6 1/8''	5 3/8''	4 5/8''	3 7/8''	3 1/8''	2 5/16''	1 9/16''	13/16''	0''
	Total	7 9/16''	6 13/16''	6 1/8''	5 3/8''	4 5/8''	3 7/8''	3 1/8''	2 5/16''	1 9/16''	13/16''	0''
Girder N	$\triangle_s$	0''	0''	0''	0''	0''	0''	0''	0''	0''	0''	0''
	$\triangle'_s$	0''	0''	0''	0''	0''	0''	0''	0''	0''	0''	0''
	$\triangle_c$	0''	0''	0''	0''	0''	0''	0''	0''	0''	0''	0''
	V.C.C.	7 9/16''	6 7/8''	6 1/8''	5 3/8''	4 5/8''	3 7/8''	3 1/8''	2 5/16''	1 9/16''	13/16''	0''
	Total	7 9/16''	6 7/8''	6 1/8''	5 3/8''	4 5/8''	3 7/8''	3 1/8''	2 5/16''	1 9/16''	13/16''	0''

CAMBER DIAGRAM

Reference line = line between top of web at Pier 3 and top of web at Abutment B (℄ bearing to ℄ bearing).

$\triangle_s$ = Deflection of girder from its own weight after erection including diaphragms, connectors, etc.

$\triangle'_s$ = Deflection of girder from dead load of concrete deck slab, bolster and construction tolerance.

$\triangle_c$ = Deflection of girder from permanent dead load added after deck slab is cast (e.g. parapet).

V.C.C = Vertical curve camber = Distance between the reference line and top of web after full dead load deflection.

Total camber = $\triangle_s + \triangle'_s + \triangle_c$ + V.C.C.

Sign convention: Deflections are positive if downward; negative if upward.

V.C.C. is positive if the top of web after full dead load deflection is above the reference line; and negative if below the reference line.

Total camber is positive if the top of web as fabricated is above the reference line; and negative if below the reference line.

Diagram depicts all values being positive, and is not meant to reflect actual conditions.

257-38A_046.dgn

SGCAMI MOD 04-30-2020

COMMONWEALTH OF VIRGINIA
JEREMY SCHLUSSEL
Lic. No. 033974
PROFESSIONAL ENGINEER

Jeremy Schlussel
2022.07.08 18:26:19 -04'00'

WHITMAN REQUARDT & ASSOCIATES
RICHMOND, VA
STRUCTURAL ENGINEER

Not to scale

© 2022, Commonwealth of Virginia

No.	Description	Date
	Revisions	

COMMONWEALTH OF VIRGINIA
DEPARTMENT OF TRANSPORTATION

STRUCTURE AND BRIDGE DIVISION

CAMBER DIAGRAM
SPAN d

Designed: KML	Date	Plan No.	Sheet No.
Drawn: CRR	July 2022	257-38A	46 of 125
Checked: KML			

STATE	FEDERAL AID		STATE		SHEET NO.
	ROUTE	PROJECT	ROUTE	PROJECT	
VA.	—		95	0095-076-299, B688	47

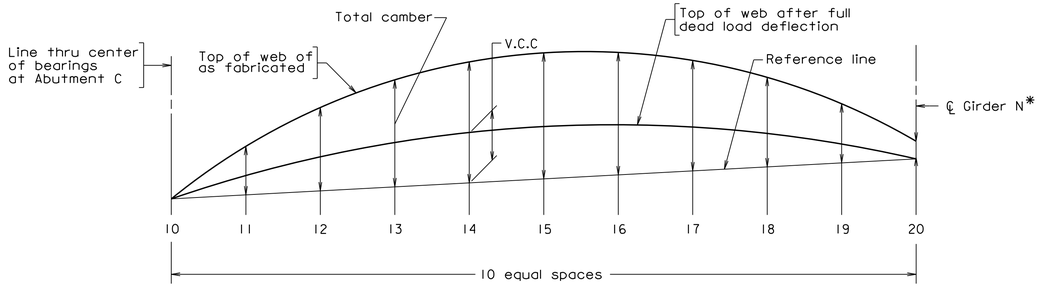

	Point	10	11	12	13	14	15	16	17	18	19	20
Girder O	△s	0''	1/16''	1/8''	3/16''	1/4''	5/16''	5/16''	3/8''	3/8''	7/16''	7/16''
	△'s	0''	5/16''	5/8''	15/16''	1 3/16''	1 7/16''	1 11/16''	1 13/16''	2''	2 1/8''	2 5/16''
	△c	0''	1/16''	1/16''	1/8''	1/8''	3/16''	3/16''	3/16''	1/4''	1/4''	1/4''
	V.C.C.	0''	2 1/8''	3 1/8''	4 5/16''	5 1/2''	6 13/16''	8 3/16''	9 11/16''	11 3/16''	1'-1 1/2''	1'-3 11/16''
	Total	0''	2 3/16''	3 15/16''	5 9/16''	7 1/16''	8 3/4''	10 3/8''	1'-0 1/16''	1'-2 3/16''	1'-4 5/16''	1'-6 11/16''
Girder P	△s	0''	1/16''	1/8''	3/16''	1/4''	1/4''	5/16''	3/8''	3/8''	7/16''	7/16''
	△'s	0''	5/16''	5/8''	15/16''	1 1/8''	1 3/8''	1 5/8''	1 3/4''	2''	2 1/8''	2 1/4''
	△c	0''	1/16''	1/16''	1/8''	1/8''	1/8''	3/16''	3/16''	1/4''	1/4''	1/4''
	V.C.C.	0''	1/2''	1 1/8''	1 13/16''	2 9/16''	3 7/16''	4 7/16''	5 11/16''	7''	8 13/16''	10 13/16''
	Total	0''	15/16''	1 15/16''	3 1/16''	4 1/16''	5 3/16''	6 3/16''	8''	9 5/16''	11 5/16''	1'-1 3/4''
Girder Q	△s	0''	1/16''	1/8''	3/16''	1/4''	1/4''	5/16''	3/8''	3/8''	7/16''	7/16''
	△'s	0''	1/4''	5/8''	7/8''	1 1/16''	1 3/8''	1 9/16''	1 11/16''	1 15/16''	2''	2 1/8''
	△c	0''	0''	1/16''	1/16''	1/8''	1/8''	3/16''	3/16''	3/16''	3/16''	1/4''
	V.C.C.	0''	1''	2''	3 1/16''	4 1/8''	5 3/16''	6 1/4''	7 3/8''	8 7/8''	9 7/8''	10 15/16''
	Total	0''	1 5/16''	2 13/16''	4 3/16''	5 9/16''	6 15/16''	8 5/16''	9 5/8''	11 3/8''	1'-0 1/2''	1'-1 5/8''
Girder R	△s	0''	1/16''	1/8''	3/16''	1/4''	1/4''	5/16''	3/8''	3/8''	7/16''	3/8''
	△'s	0''	1/4''	1/2''	3/4''	1 1/16''	1 1/4''	1 7/16''	1 5/8''	1 3/4''	1 7/8''	2 1/16''
	△c	0''	0''	1/16''	1/16''	1/8''	1/8''	1/8''	3/16''	3/16''	3/16''	3/16''
	V.C.C.	0''	15/16''	1 7/8''	2 7/16''	3 3/4''	4 11/16''	5 5/8''	6 9/16''	7 5/8''	9 1/16''	10 1/8''
	Total	0''	1 1/4''	2 9/16''	3 13/16''	5 3/16''	6 5/16''	7 1/2''	8 3/4''	9 15/16''	11 9/16''	1'-0 3/4''
Girder S	△s	0''	1/16''	1/8''	3/16''	3/16''	1/4''	5/16''	5/16''	3/8''	3/8''	3/8''
	△'s	0''	1/4''	1/2''	3/4''	1''	1 3/16''	1 3/8''	1 9/16''	1 5/8''	1 3/4''	1 13/16''
	△c	0''	0''	1/16''	1/16''	1/8''	1/8''	1/8''	3/16''	3/16''	3/16''	3/16''
	V.C.C.	0''	15/16''	1 7/8''	2 3/4''	3 11/16''	4 5/8''	5 1/2''	6 3/8''	7 3/4''	9 3/16''	11 3/8''
	Total	0''	1 1/4''	2 9/16''	3 3/4''	5''	6 3/16''	7 5/16''	8 5/8''	9 15/16''	11 1/2''	1'-1 3/4''
Girder T	△s	0''	1/16''	1/8''	3/16''	3/16''	1/4''	5/16''	3/16''	3/8''	3/8''	3/8''
	△'s	0''	1/4''	7/16''	11/16''	15/16''	1 1/16''	1 1/4''	1 3/8''	1 1/2''	1 3/16''	1 11/16''
	△c	0''	0''	1/16''	1/16''	1/8''	1/8''	1/8''	1/8''	3/16''	3/16''	3/16''
	V.C.C.	0''	7/8''	1 13/16''	2 11/16''	3 3/16''	4 1/2''	5 1/16''	6 7/16''	7 7/8''	9 7/8''	1'-0 7/16''
	Total	0''	1 3/16''	2 7/16''	3 5/8''	4 13/16''	5 15/16''	7 1/8''	8 1/4''	9 15/16''	1'-0''	1'-2 11/16''

The camber of the Girders O through T at Girder N accounts for the movement of Girder N after the connection between the girders has been made.

CAMBER DIAGRAM GIRDERS O THRU T

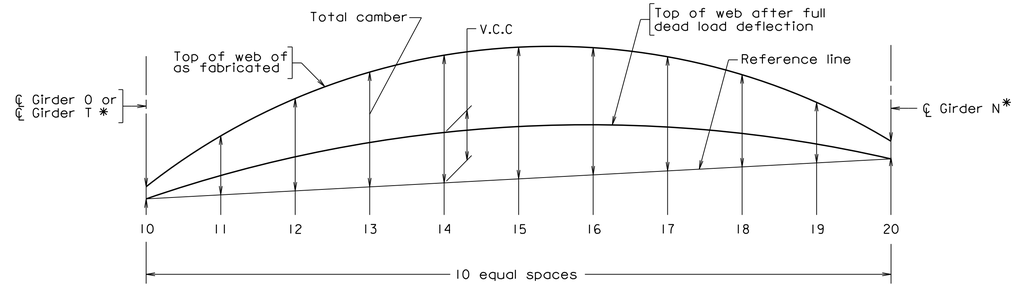

	Point	10	11	12	13	14	15	16	17	18	19	20
Girder U	△s	1/8''	1/8''	1/8''	1/8''	1/8''	1/8''	1/8''	1/8''	3/16''	3/16''	3/16''
	△'s	1 1/16''	1 1/4''	1 3/8''	1 7/16''	1 5/8''	1 11/16''	1 3/4''	1 7/8''	1 15/16''	1 15/16''	2''
	△c	1/8''	3/16''	3/16''	3/16''	3/16''	1/4''	1/4''	1/4''	1/4''	1/4''	1/4''
	V.C.C.	0''	1/2''	1 1/8''	1 13/16''	2 9/16''	3 7/16''	4 7/16''	5 11/16''	7''	8 13/16''	10 13/16''
	Total	1 5/16''	2 1/16''	2 13/16''	3 9/16''	4 1/2''	5 1/2''	6 9/16''	7 15/16''	9 3/8''	11 3/16''	1'-1 1/4''
Girder V	△s	1/8''	1/8''	1/8''	1/8''	3/16''	3/16''	3/16''	3/16''	3/16''	3/16''	3/16''
	△'s	1 11/16''	1 3/4''	1 3/4''	1 13/16''	1 7/8''	1 15/16''	1 15/16''	2''	2''	2 1/16''	2 1/8''
	△c	1/4''	1/4''	1/4''	1/4''	1/4''	1/4''	1/4''	1/4''	1/4''	1/4''	3/16''
	V.C.C.	0''	1/2''	15/16''	1 1/2''	2 1/16''	2 5/8''	3 3/8''	4 1/16''	4 13/16''	5 9/16''	6 3/8''
	Total	2 1/16''	2 5/8''	3 1/16''	3 11/16''	4 3/8''	5''	5 3/4''	6 1/2''	7 1/4''	8 1/16''	8 7/8''
Girder W	△s	1/16''	1/16''	1/16''	1/8''	1/8''	1/8''	1/8''	1/8''	1/8''	1/8''	1/8''
	△'s	7/8''	7/8''	15/16''	1''	1''	1''	1''	15/16''	15/16''	7/8''	13/16''
	△c	1/16''	1/16''	1/16''	1/16''	1/16''	1/16''	1/16''	1/16''	1/16''	1/16''	1/16''
	V.C.C.	0''	5/8''	1 5/16''	2''	2 11/16''	3 7/16''	4 3/16''	5 1/16''	5 3/4''	6 7/16''	7 3/16''
	Total	1''	1 5/8''	2 3/8''	3 3/16''	3 7/8''	4 5/8''	5 3/8''	6 3/16''	6 7/8''	7 1/2''	8 3/16''
Girder X	△s	1/8''	1/8''	1/8''	1/8''	1/8''	1/8''	1/8''	1/8''	1/8''	1/8''	1/8''
	△'s	1 1/4''	1 1/4''	1 1/4''	1 1/4''	1 5/16''	1 5/16''	1 1/4''	1 1/4''	1 1/4''	1 1/4''	1 3/16''
	△c	1/16''	1/16''	1/16''	1/16''	1/16''	1/16''	1/16''	1/16''	1/16''	0''	1/16''
	V.C.C.	0''	5/16''	5/8''	1''	1 3/8''	1 11/16''	2 1/8''	2 9/16''	3 1/4''	4 1/4''	5 3/16''
	Total	1 7/16''	1 3/4''	2 1/16''	2 7/16''	2 7/8''	3 3/16''	3 9/16''	4''	4 11/16''	5 5/8''	6 3/16''

The camber of the Girders U through X at Girders N, O and T accounts for the movement of Girders N, O and T after the connection between the girders has been made.

CAMBER DIAGRAM GIRDERS U THRU X

* Fabricator to note that Girders N, O and T shall be treated as an elastic foundation.

Reference line = line between top of web at Abutment C and top of web at Girder N (℄ bearing to face of web).

$\triangle_S$ = Deflection of girder from its own weight after erection including diaphragms, connectors, etc.

$\triangle'_S$ = Deflection of girder from dead load of concrete deck slab, bolster and construction tolerance.

$\triangle_C$ = Deflection of girder from permanent dead load added after deck slab is cast (e.g. parapet).

V.C.C = Vertical curve camber = Distance between the reference line and top of web after full dead load deflection.

Total camber = $\triangle_S + \triangle'_S + \triangle_C$ + V.C.C.

Sign convention: Deflections are positive if downward; negative if upward.

V.C.C. is positive if the top of web after full dead load deflection is above the reference line; and negative if below the reference line.

Total camber is positive if the top of web as fabricated is above the reference line; and negative if below the reference line.

Diagram depicts all values being positive, and is not meant to reflect actual conditions.

Not to scale

© 2022, Commonwealth of Virginia

COMMONWEALTH OF VIRGINIA
JEREMY SCHLUSSEL
Lic. No. 033974
PROFESSIONAL ENGINEER

Jeremy Schlussel
2022.07.08 18:23:25 -04'00'

WHITMAN REQUARDT & ASSOCIATES
RICHMOND, VA
STRUCTURAL ENGINEER

257-38A_047.dgn

04-30-2020

SGCAM1

No.	Description	Date
	Revisions	

COMMONWEALTH OF VIRGINIA
DEPARTMENT OF TRANSPORTATION

STRUCTURE AND BRIDGE DIVISION

CAMBER DIAGRAM SPAN e

Designed: KML
Drawn: CRR
Checked: JDC

Date	Plan No.	Sheet No.
July 2022	257-38A	47 of 125

STATE	FEDERAL AID		STATE		SHEET NO.
	ROUTE	PROJECT	ROUTE	PROJECT	
VA.	—		95	0095-076-299, B688	48

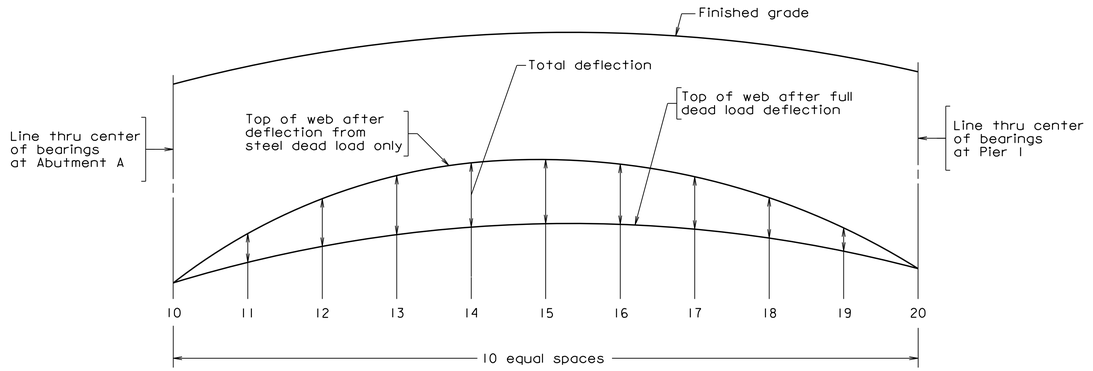

	Point	10	11	12	13	14	15	16	17	18	19	20
Girder A	$\triangle_s$	0''	7/16''	3/4''	1 1/16''	1 3/16''	1 1/4''	1 3/16''	1 1/16''	3/4''	7/16''	0''
	$\triangle_c$	0''	3/16''	5/16''	3/8''	7/16''	1/2''	7/16''	3/8''	5/16''	3/16''	0''
	Total	0''	9/16''	1 1/16''	1 7/16''	1 11/16''	1 3/4''	1 11/16''	1 7/16''	1 1/16''	9/16''	0''
Girder B	$\triangle_s$	0''	1/4''	7/16''	5/8''	11/16''	3/4''	11/16''	5/8''	7/16''	1/4''	0''
	$\triangle_c$	0''	3/16''	5/16''	7/16''	1/2''	1/2''	1/2''	7/16''	5/16''	3/16''	0''
	Total	0''	7/16''	3/4''	1 1/16''	1 3/16''	1 1/4''	1 3/16''	1 1/16''	3/4''	7/16''	0''
Girder E	$\triangle_s$	0''	3/16''	5/16''	7/16''	1/2''	1/2''	1/2''	7/16''	5/16''	3/16''	0''
	$\triangle_c$	0''	3/16''	5/16''	7/16''	1/2''	9/16''	1/2''	7/16''	5/16''	3/16''	0''
	Total	0''	5/16''	5/8''	7/8''	1''	1 1/16''	1''	7/8''	5/8''	5/16''	0''
Girder F	$\triangle_s$	0''	7/16''	3/4''	1 1/16''	1 3/16''	1 1/4''	1 3/16''	1 1/16''	3/4''	7/16''	0''
	$\triangle_c$	0''	5/16''	9/16''	3/4''	7/8''	15/16''	7/8''	3/4''	9/16''	5/16''	0''
	Total	0''	11/16''	1 5/16''	1 13/16''	2 1/16''	2 3/16''	2 1/16''	1 13/16''	1 5/16''	11/16''	0''
Girder G	$\triangle_s$	0''	1/2''	7/8''	1 1/4''	1 7/16''	1 1/2''	1 7/16''	1 1/4''	7/8''	1/2''	0''
	$\triangle_c$	0''	1/8''	1/4''	3/8''	7/16''	7/16''	7/16''	3/8''	1/4''	1/8''	0''
	Total	0''	5/8''	1 3/16''	1 5/8''	1 7/8''	1 15/16''	1 7/8''	1 5/8''	1 3/16''	5/8''	0''
Girder H	$\triangle_s$	0''	1/4''	7/16''	5/8''	11/16''	3/4''	11/16''	5/8''	7/16''	1/4''	0''
	$\triangle_c$	0''	1/8''	1/4''	5/16''	3/8''	3/8''	3/8''	5/16''	1/4''	1/8''	0''
	Total	0''	3/8''	11/16''	15/16''	1 1/16''	1 1/8''	1 1/16''	15/16''	11/16''	3/8''	0''
Girder L	$\triangle_s$	0''	3/16''	5/16''	3/8''	1/2''	1/2''	1/2''	3/8''	5/16''	3/16''	0''
	$\triangle_c$	0''	1/8''	3/16''	1/4''	5/16''	5/16''	5/16''	1/4''	3/16''	1/8''	0''
	Total	0''	1/4''	1/2''	11/16''	3/4''	13/16''	3/4''	11/16''	1/2''	1/4''	0''
Girder M	$\triangle_s$	0''	9/16''	1''	1 3/8''	1 5/8''	1 3/4''	1 5/8''	1 7/16''	1''	9/16''	0''
	$\triangle_c$	0''	1/16''	1/8''	3/16''	3/16''	3/16''	3/16''	3/16''	1/8''	1/16''	0''
	Total	0''	5/8''	1 1/8''	1 9/16''	1 13/16''	1 15/16''	1 13/16''	1 5/8''	1 1/8''	5/8''	0''
Girder N	$\triangle_s$	0''	1/2''	15/16''	1 1/4''	1 1/2''	1 9/16''	1 1/2''	1 5/16''	15/16''	1/2''	0''
	$\triangle_c$	0''	1/8''	3/16''	1/4''	5/16''	5/16''	5/16''	1/4''	3/16''	1/8''	0''
	Total	0''	5/8''	1 1/8''	1 1/2''	1 13/16''	1 7/8''	1 13/16''	1 9/16''	1 1/8''	5/8''	0''

$\triangle_s$ = Deflection of girder from dead load of concrete deck slab, bolster and construction tolerance.
$\triangle_c$ = Deflection of girder from permanent dead load added after deck slab is cast (e.g. parapet).

DEAD LOAD DEFLECTIONS

TOP OF DECK ELEVATIONS ALONG ℄ GIRDER											
Point	10	11	12	13	14	15	16	17	18	19	20
Girder M	215.90	216.00	216.09	216.17	216.24	216.31	216.37	216.41	216.46	216.49	216.51
Girder N	215.82	215.92	216.01	216.10	216.17	216.23	216.29	216.34	216.38	216.41	216.44

Notes:

Top of existing Girders A, B, E, F, G, H and L are to be surveyed prior to pouring proposed deck slab over these girders. Dead load deflections provided are given relative to the top of the girders after the existing deck slab has been removed.

257-38A_048.dgn

04-30-2020

SGDLD1

COMMONWEALTH OF VIRGINIA
JEREMY SCHLUSSEL
Lic. No. 033974
PROFESSIONAL ENGINEER

Jeremy Schlussel
2022.07.08 18:25:54 -04'00'

WHITMAN REQUARDT & ASSOCIATES
RICHMOND, VA
STRUCTURAL ENGINEER

Not to scale

© 2022, Commonwealth of Virginia

No.	Description	Date
Revisions		

COMMONWEALTH OF VIRGINIA
DEPARTMENT OF TRANSPORTATION

STRUCTURE AND BRIDGE DIVISION

DEAD LOAD DEFLECTIONS AND SLAB ELEVATIONS SPAN a

Designed: KML	Date	Plan No.	Sheet No.
Drawn: CRR	July 2022	257-38A	48 of 125
Checked: LDC			

STATE	FEDERAL AID		STATE		SHEET NO.
	ROUTE	PROJECT	ROUTE	PROJECT	
VA.	—		95	0095-076-299, B688	49

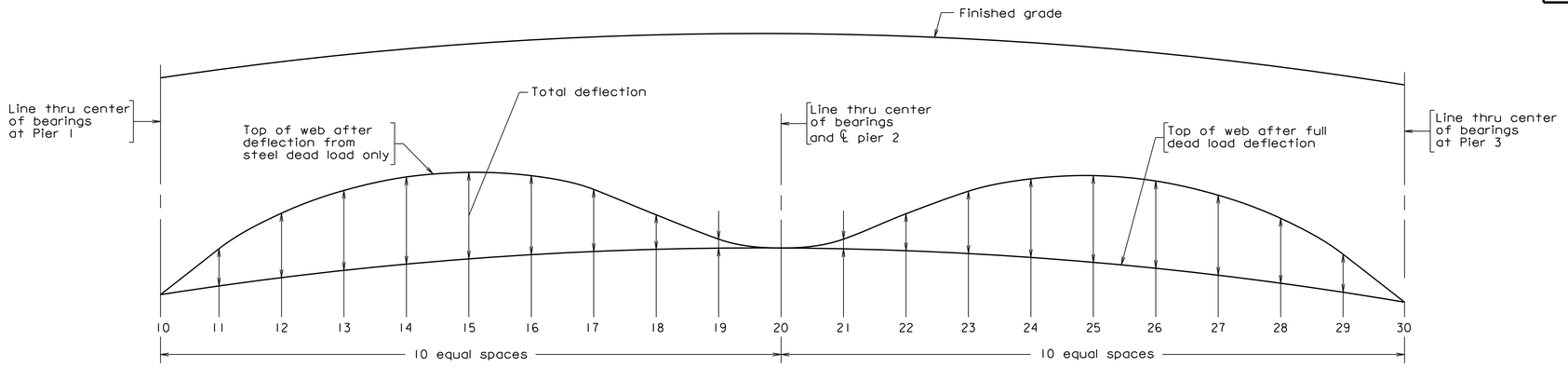

	Point	10	11	12	13	14	15	16	17	18	19	20	21	22	23	24	25	26	27	28	29	30
Girder L	$\triangle'_{s1}$	0''	1/16''	1/16''	1/8''	1/8''	1/8''	1/8''	1/8''	1/16''	0''	0''	0''	-1/16''	-1/16''	-1/16''	-1/16''	-1/16''	-1/16''	-1/16''	0''	0''
	$\triangle'_{s2}$	0''	5/16''	1/2''	11/16''	11/16''	9/16''	7/16''	1/4''	1/16''	0''	0''	1/8''	3/8''	5/8''	15/16''	1 1/8''	1 3/16''	1 1/8''	7/8''	1/2''	0''
	$\triangle_c$	0''	3/16''	3/8''	9/16''	5/8''	5/8''	9/16''	7/16''	5/16''	1/8''	0''	-1/16''	-1/8''	-3/16''	-3/16''	-1/8''	-1/8''	-1/16''	-1/16''	0''	0''
	Total	0''	9/16''	15/16''	1 3/8''	1 7/16''	1 5/16''	1 1/8''	13/16''	7/16''	1/8''	0''	1/16''	3/16''	3/8''	11/16''	15/16''	1''	1''	3/4''	1/2''	0''
Girder M	$\triangle'_{s1}$	0''	1/16''	1/8''	1/8''	1/8''	1/8''	1/8''	1/8''	1/16''	1/16''	0''	0''	-1/16''	-1/16''	-1/16''	-1/16''	-1/16''	-1/16''	-1/16''	0''	0''
	$\triangle'_{s2}$	0''	5/16''	9/16''	11/16''	11/16''	9/16''	3/8''	3/16''	1/16''	0''	0''	3/16''	7/16''	13/16''	1 1/8''	1 3/8''	1 1/2''	1 3/8''	1 1/16''	9/16''	0''
	$\triangle_c$	0''	1/4''	7/16''	9/16''	11/16''	11/16''	5/8''	1/2''	5/16''	1/8''	0''	-1/8''	-3/16''	-3/16''	-3/16''	-1/8''	-1/8''	-1/16''	-1/16''	0''	0''
	Total	0''	5/8''	1 1/8''	1 3/8''	1 1/2''	1 3/8''	1 1/8''	13/16''	7/16''	3/16''	0''	1/16''	3/16''	9/16''	7/8''	1 3/16''	1 5/16''	1 1/4''	15/16''	9/16''	0''
Girder N	$\triangle'_{s1}$	0''	3/8''	5/8''	7/8''	15/16''	7/8''	3/4''	9/16''	3/8''	1/8''	0''	-1/16''	-1/16''	0''	1/16''	1/8''	3/16''	3/16''	3/16''	1/8''	0''
	$\triangle'_{s2}$	0''	3/8''	5/8''	11/16''	11/16''	1/2''	3/8''	3/16''	0''	-1/16''	0''	3/16''	1/2''	15/16''	1 5/16''	1 5/8''	1 11/16''	1 3/16''	1 3/16''	9/16''	0''
	$\triangle_c$	0''	1/4''	1/2''	5/8''	11/16''	11/16''	11/16''	9/16''	3/8''	3/16''	0''	-1/8''	-3/16''	-1/4''	-3/16''	-3/16''	-1/8''	-1/16''	0''	0''	0''
	Total	0''	1''	1 3/4''	2 3/16''	2 5/16''	2 1/16''	1 13/16''	1 5/16''	3/4''	1/4''	0''	0''	1/4''	11/16''	1 3/16''	1 9/16''	1 3/4''	1 11/16''	1 3/8''	11/16''	0''

$\triangle'_{s1}$ = Deflection of girder from dead load of ramp girders.
$\triangle'_{s2}$ = Deflection of girder from dead load of concrete deck slab, bolster and construction tolerance.
$\triangle_c$ = Deflection of girder from permanent dead load added after deck slab is cast (e.g. parapet).

DEAD LOAD DEFLECTIONS

TOP OF DECK ELEVATIONS ALONG ℄ GIRDER

Point	10	11	12	13	14	15	16	17	18	19	20	21	22	23	24	25	26	27	28	29	30
Girder M	216.52	216.54	216.53	216.51	216.47	216.40	216.32	216.21	216.08	215.94	215.76	215.57	215.35	215.12	214.86	214.58	214.28	213.95	213.60	213.23	212.84
Girder N	216.44	216.46	216.46	216.44	216.39	216.33	216.24	216.14	216.01	215.86	215.69	215.49	215.28	215.04	214.78	214.50	214.20	213.87	213.52	213.15	212.76

257-38A_049.dgn

04-30-2020

SGDLD2

COMMONWEALTH OF VIRGINIA
JEREMY SCHLUSSEL
Lic. No. 033974
PROFESSIONAL ENGINEER

Jeremy Schlussel
2022.07.08 18:23:51 -04'00'

WHITMAN REQUARDT & ASSOCIATES
RICHMOND, VA
STRUCTURAL ENGINEER

Not to scale

© 2022, Commonwealth of Virginia

No.	Description	Date
	Revisions	

COMMONWEALTH OF VIRGINIA
DEPARTMENT OF TRANSPORTATION

STRUCTURE AND BRIDGE DIVISION

DEAD LOAD DEFLECTIONS AND SLAB ELEVATIONS SPANS b AND c 1 OF 2

Designed: KML
Drawn: CRR
Checked: LDC

Date	Plan No.	Sheet No.
July 2022	257-38A	49 of 125

STATE	FEDERAL AID		STATE		SHEET NO.
	ROUTE	PROJECT	ROUTE	PROJECT	
VA.	—		95	0095-076-299, B688	50

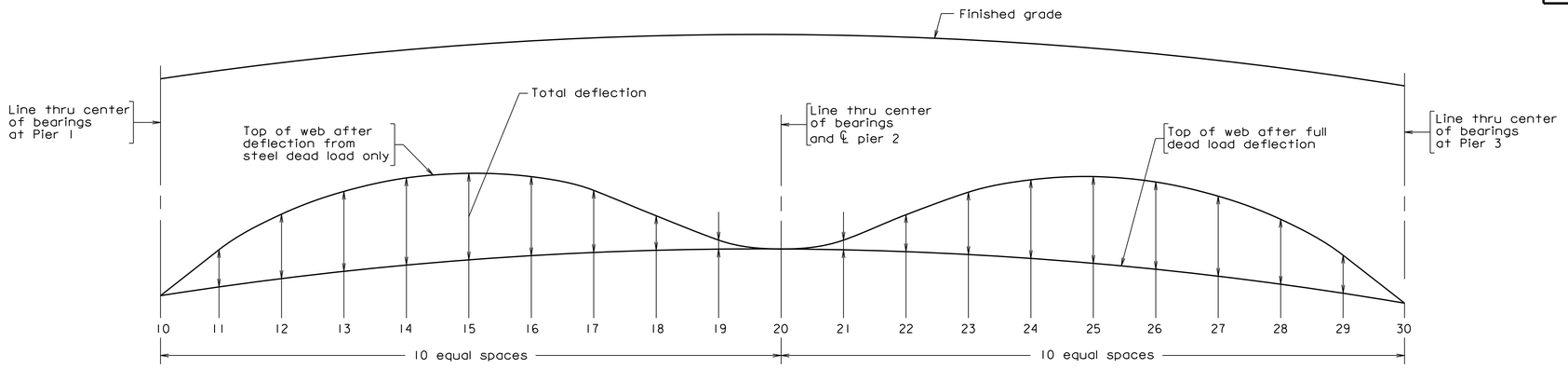

	Point	10	11	12	13	14	15	16	17	18	19	20	21	22	23	24	25	26	27	28	29	30
Girder A	$\triangle_S$	0''	5/8''	1 1/16''	1 5/16''	1 3/8''	1 1/4''	1''	5/8''	5/16''	1/8''	0''	1/16''	1/4''	1/2''	7/8''	1 1/8''	1 1/4''	1 3/16''	1 5/16''	9/16''	0''
	$\triangle_C$	0''	1/16''	1/8''	1/8''	1/8''	1/16''	1/16''	0''	0''	0''	0''	1/16''	1/8''	3/16''	3/16''	1/4''	1/4''	3/16''	3/16''	1/16''	0''
	Total	0''	11/16''	1 3/16''	1 7/16''	1 1/2''	1 5/16''	1 1/16''	5/8''	5/16''	1/8''	0''	1/8''	3/8''	11/16''	1 1/16''	1 3/8''	1 1/2''	1 3/8''	1 1/8''	5/8''	0''
Girder B	$\triangle_S$	0''	3/8''	11/16''	7/8''	15/16''	7/8''	11/16''	7/16''	3/16''	1/16''	0''	1/16''	3/16''	3/8''	9/16''	3/4''	13/16''	3/4''	5/8''	5/16''	0''
	$\triangle_C$	0''	0''	0''	0''	0''	0''	0''	-1/16''	-1/16''	0''	0''	0''	1/16''	1/8''	1/8''	1/8''	1/8''	1/8''	1/16''	1/16''	0''
	Total	0''	3/8''	11/16''	7/8''	15/16''	7/8''	11/16''	3/8''	1/8''	1/16''	0''	1/16''	1/4''	1/2''	11/16''	7/8''	15/16''	7/8''	11/16''	3/8''	0''
Girder E	$\triangle_S$	0''	3/8''	11/16''	13/16''	7/8''	13/16''	5/8''	7/16''	3/16''	1/16''	0''	1/16''	3/16''	7/16''	5/8''	13/16''	15/16''	7/8''	11/16''	3/8''	0''
	$\triangle_C$	0''	1/16''	1/16''	1/16''	1/16''	1/16''	1/16''	0''	0''	0''	0''	0''	1/16''	1/16''	1/8''	1/8''	1/8''	1/8''	1/8''	1/16''	0''
	Total	0''	7/16''	3/4''	7/8''	15/16''	7/8''	11/16''	7/16''	3/16''	1/16''	0''	1/16''	1/4''	1/2''	3/4''	15/16''	1 1/16''	1''	13/16''	7/16''	0''
Girder F	$\triangle_S$	0''	15/16''	1 11/16''	2 1/8''	2 3/16''	1 15/16''	1 7/16''	13/16''	3/8''	1/16''	0''	1/4''	11/16''	1 5/16''	2''	2 3/16''	2 13/16''	2 11/16''	2 1/8''	1 3/16''	0''
	$\triangle_C$	0''	0''	1/16''	0''	0''	0''	0''	0''	0''	0''	0''	0''	0''	0''	1/16''	1/16''	1/16''	1/16''	1/16''	0''	0''
	Total	0''	15/16''	1 3/4''	2 1/8''	2 3/16''	1 15/16''	1 7/16''	13/16''	3/8''	1/16''	0''	1/4''	11/16''	1 5/16''	2 1/16''	2 5/8''	2 7/8''	2 3/4''	2 3/16''	1 3/16''	0''
Girder G	$\triangle_S$	0''	11/16''	1 1/4''	1 9/16''	1 5/8''	1 7/16''	1 1/16''	5/8''	1/4''	1/16''	0''	3/16''	1/2''	1''	1 1/2''	1 15/16''	2 1/8''	2''	1 9/16''	7/8''	0''
	$\triangle_C$	0''	1/16''	1/16''	1/16''	1/16''	1/16''	1/16''	1/16''	0''	0''	0''	0''	0''	0''	0''	0''	0''	0''	0''	0''	0''
	Total	0''	3/4''	1 5/16''	1 5/8''	1 11/16''	1 1/2''	1 1/8''	11/16''	1/4''	1/16''	0''	3/16''	1/2''	1''	1 1/2''	1 15/16''	2 1/8''	2''	1 9/16''	7/8''	0''
Girder H	$\triangle_S$	0''	7/16''	13/16''	1''	1 1/16''	15/16''	11/16''	7/16''	3/16''	0''	0''	1/8''	3/8''	11/16''	1''	1 1/4''	1 3/8''	1 5/16''	1''	9/16''	0''
	$\triangle_C$	0''	1/16''	1/8''	3/16''	3/16''	3/16''	3/16''	1/8''	1/16''	1/16''	0''	0''	-1/16''	-1/16''	-1/16''	-1/16''	0''	0''	0''	0''	0''
	Total	0''	1/2''	15/16''	1 3/16''	1 1/4''	1 1/8''	7/8''	9/16''	1/4''	1/16''	0''	1/8''	5/16''	5/8''	15/16''	1 3/16''	1 3/8''	1 5/16''	1''	9/16''	0''

$\triangle_S$ = Deflection of girder from dead load of concrete deck slab, bolster and construction tolerance.

$\triangle_C$ = Deflection of girder from permanent dead load added after deck slab is cast (e.g. parapet).

DEAD LOAD DEFLECTIONS

257-38A_050.dgn

04-30-2020

SGDLD2

COMMONWEALTH OF VIRGINIA
JEREMY SCHLUSSEL
Lic. No. 033974
PROFESSIONAL ENGINEER

Jeremy Schlussel
2022.07.08 18:24:20 -04'00'

WHITMAN REQUARDT & ASSOCIATES
RICHMOND, VA
STRUCTURAL ENGINEER

Not to scale

© 2022, Commonwealth of Virginia

No.	Description	Date
	Revisions	

COMMONWEALTH OF VIRGINIA
DEPARTMENT OF TRANSPORTATION

STRUCTURE AND BRIDGE DIVISION

DEAD LOAD DEFLECTIONS
AND SLAB ELEVATIONS
SPANS b AND c 2 OF 2

Designed: KMI	Date	Plan No.	Sheet No.
Drawn: CRR	July 2022	257-38A	50 of 125
Checked: JMK			

STATE	FEDERAL AID		STATE		SHEET NO.
	ROUTE	PROJECT	ROUTE	PROJECT	
VA.	—		95	0095-076-299, B688	51

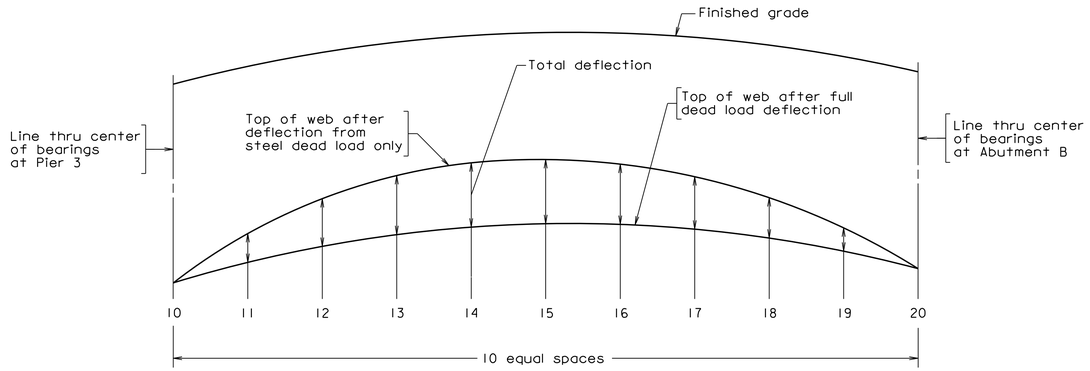

	Point	10	11	12	13	14	15	16	17	18	19	20
Girder A	$\triangle'_S$	0''	0''	0''	0''	0''	0''	0''	0''	0''	0''	0''
	$\triangle_C$	0''	0''	0''	0''	0''	0''	0''	0''	0''	0''	0''
	Total	0''	0''	0''	0''	0''	0''	0''	0''	0''	0''	0''
Girder B	$\triangle'_S$	0''	0''	0''	0''	1/16''	1/16''	1/16''	0''	0''	0''	0''
	$\triangle_C$	0''	0''	0''	0''	0''	0''	0''	0''	0''	0''	0''
	Total	0''	0''	0''	0''	1/16''	1/16''	1/16''	0''	0''	0''	0''
Girder E	$\triangle'_S$	0''	0''	0''	0''	0''	0''	0''	0''	0''	0''	0''
	$\triangle_C$	0''	0''	0''	0''	0''	0''	0''	0''	0''	0''	0''
	Total	0''	0''	0''	0''	0''	0''	0''	0''	0''	0''	0''
Girder F	$\triangle'_S$	0''	0''	1/16''	1/16''	1/16''	1/16''	1/16''	1/16''	1/16''	0''	0''
	$\triangle_C$	0''	0''	0''	0''	0''	0''	0''	0''	0''	0''	0''
	Total	0''	0''	1/16''	1/16''	1/16''	1/16''	1/16''	1/16''	1/16''	0''	0''
Girder G	$\triangle'_S$	0''	0''	1/16''	1/16''	1/8''	1/8''	1/8''	1/16''	1/16''	0''	0''
	$\triangle_C$	0''	0''	0''	0''	0''	0''	0''	0''	0''	0''	0''
	Total	0''	0''	1/16''	1/16''	1/8''	1/8''	1/8''	1/16''	1/16''	0''	0''
Girder H	$\triangle'_S$	0''	0''	0''	0''	1/16''	1/16''	1/16''	0''	0''	0''	0''
	$\triangle_C$	0''	0''	0''	0''	0''	0''	0''	0''	0''	0''	0''
	Total	0''	0''	0''	0''	1/16''	1/16''	1/16''	0''	0''	0''	0''
Girder L	$\triangle'_S$	0''	0''	0''	0''	0''	0''	0''	0''	0''	0''	0''
	$\triangle_C$	0''	0''	0''	0''	0''	0''	0''	0''	0''	0''	0''
	Total	0''	0''	0''	0''	0''	0''	0''	0''	0''	0''	0''
Girder M	$\triangle'_S$	0''	0''	0''	0''	0''	0''	0''	0''	0''	0''	0''
	$\triangle_C$	0''	0''	0''	0''	0''	0''	0''	0''	0''	0''	0''
	Total	0''	0''	0''	0''	0''	0''	0''	0''	0''	0''	0''
Girder N	$\triangle'_S$	0''	0''	0''	0''	0''	0''	0''	0''	0''	0''	0''
	$\triangle_C$	0''	0''	0''	0''	0''	0''	0''	0''	0''	0''	0''
	Total	0''	0''	0''	0''	0''	0''	0''	0''	0''	0''	0''

$\triangle'_S$ = Deflection of girder from dead load of concrete deck slab, bolster and construction tolerance.
$\triangle_C$ = Deflection of girder from permanent dead load added after deck slab is cast (e.g. parapet).

DEAD LOAD DEFLECTIONS

TOP OF DECK ELEVATIONS ALONG ℄ GIRDER											
Point	10	11	12	13	14	15	16	17	18	19	20
Girder M	212.80	212.74	212.68	212.61	212.55	212.49	212.43	212.36	212.30	212.23	212.17
Girder N	212.72	212.66	212.60	212.53	212.47	212.41	212.35	212.28	212.22	212.15	212.09

Notes:

Top of existing Girders A, B, E, F, G, H and L are to be surveyed prior to pouring proposed deck slab over these girders. Dead load deflections provided are given relative to the top of the girders after the existing deck slab has been removed.

257-38A_051.dgn

04-30-2020

SGDLD1

COMMONWEALTH OF VIRGINIA
JEREMY SCHLUSSEL
Lic. No. 033974
PROFESSIONAL ENGINEER

Jeremy Schlussel
2022.07.08 18:24:41 -04'00'

WHITMAN REQUARDT & ASSOCIATES
RICHMOND, VA
STRUCTURAL ENGINEER

Not to scale

© 2022, Commonwealth of Virginia

No.	Description	Date
	Revisions	

COMMONWEALTH OF VIRGINIA
DEPARTMENT OF TRANSPORTATION

STRUCTURE AND BRIDGE DIVISION

DEAD LOAD DEFLECTIONS AND SLAB ELEVATIONS SPAN d

Designed: KML	Date	Plan No.	Sheet No.
Drawn: CRR	July 2022	257-38A	51 of 125
Checked: LDC			

STATE	FEDERAL AID		STATE		SHEET NO.
	ROUTE	PROJECT	ROUTE	PROJECT	
VA.	—		95	0095-076-299, B688	52

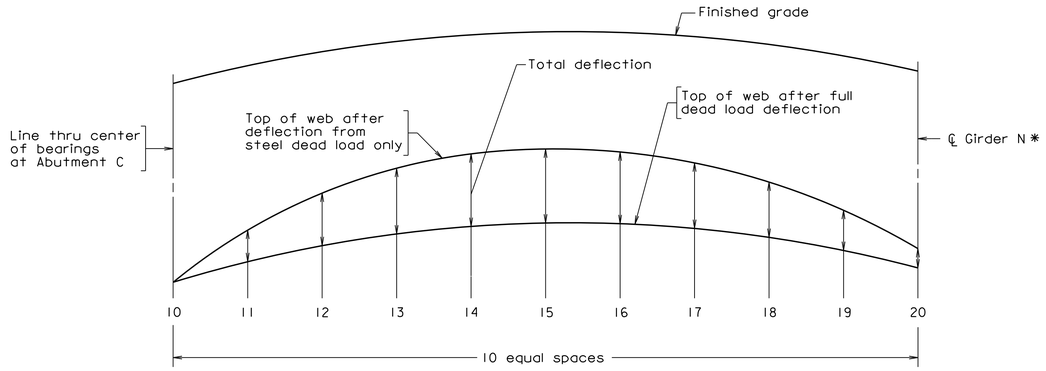

	Point	10	11	12	13	14	15	16	17	18	19	20
Girder O	△'s1	0''	3/16''	5/16''	1/2''	11/16''	13/16''	1''	1 1/8''	1 5/16''	1 7/16''	1 5/8''
	△'s2	0''	1/8''	5/16''	7/16''	1/2''	5/8''	11/16''	11/16''	11/16''	11/16''	11/16''
	△c	0''	1/16''	1/16''	1/8''	1/8''	3/16''	3/16''	3/16''	1/4''	1/4''	1/4''
	Total	0''	3/8''	11/16''	1 1/16''	1 5/16''	1 5/8''	1 7/8''	2''	2 1/4''	2 3/8''	2 9/16''
Girder P	△'s1	0''	3/16''	5/16''	1/2''	5/8''	3/4''	15/16''	1 1/16''	1 1/4''	1 3/8''	1 9/16''
	△'s2	0''	1/8''	5/16''	7/16''	1/2''	5/8''	11/16''	11/16''	3/4''	3/4''	11/16''
	△c	0''	1/16''	1/16''	1/8''	1/8''	1/8''	3/16''	3/16''	1/4''	1/4''	1/4''
	Total	0''	3/8''	11/16''	1 1/16''	1 1/4''	1 1/2''	1 13/16''	1 15/16''	2 1/4''	2 3/8''	2 1/2''
Girder Q	△'s1	0''	1/8''	5/16''	7/16''	1/2''	5/8''	11/16''	11/16''	3/4''	11/16''	11/16''
	△'s2	0''	0''	1/16''	1/16''	1/8''	1/8''	3/16''	3/16''	3/16''	3/16''	1/4''
	△c	0''	1/8''	5/16''	7/16''	9/16''	3/4''	7/8''	1''	1 3/16''	1 5/16''	1 7/16''
	Total	0''	1/4''	11/16''	15/16''	1 3/16''	1 1/2''	1 3/4''	1 7/8''	2 1/8''	2 3/16''	2 3/8''
Girder R	△'s1	0''	0''	1/16''	1/16''	1/8''	1/8''	1/8''	3/16''	3/16''	3/16''	3/16''
	△'s2	0''	1/8''	1/4''	3/8''	9/16''	11/16''	13/16''	15/16''	1 1/16''	1 3/16''	1 3/8''
	△c	0''	1/8''	1/4''	3/8''	1/2''	9/16''	5/8''	11/16''	11/16''	11/16''	11/16''
	Total	0''	1/4''	9/16''	13/16''	1 3/16''	1 3/8''	1 5/8''	1 13/16''	1 15/16''	2 1/16''	2 1/4''
Girder S	△'s1	0''	1/8''	1/4''	3/8''	1/2''	5/8''	3/4''	7/8''	15/16''	1 1/16''	1 3/16''
	△'s2	0''	1/8''	1/4''	3/8''	1/2''	9/16''	5/8''	11/16''	11/16''	11/16''	5/8''
	△c	0''	0''	1/16''	1/16''	1/8''	1/8''	1/8''	3/16''	3/16''	3/16''	3/16''
	Total	0''	1/4''	9/16''	13/16''	1 1/8''	1 5/16''	1 1/2''	1 3/4''	1 13/16''	1 15/16''	2''
Girder T	△'s1	0''	1/8''	1/4''	3/8''	1/2''	9/16''	5/8''	5/8''	5/8''	5/8''	5/8''
	△'s2	0''	0''	1/16''	1/16''	1/8''	1/8''	1/8''	1/8''	3/16''	3/16''	3/16''
	△c	0''	1/8''	3/16''	5/16''	7/16''	1/2''	5/8''	3/4''	7/8''	15/16''	1 1/16''
	Total	0''	1/4''	1/2''	3/4''	1 1/16''	1 3/16''	1 3/8''	1 1/2''	1 11/16''	1 3/4''	1 7/8''

△'s1 = Deflection of girder from dead load of concrete deck slab, bolster and construction tolerance on Girder N.

△'s2 = Deflection of girder from dead load of concrete deck slab, bolster and construction tolerance on ramp.

△c = Deflection of girder from permanent dead load added after deck slab is cast (e.g. parapet).

The deflection of the Girders O through T at Girder N accounts for the deflection of Girder N after the connection between the girders has been made.

DEAD LOAD DEFLECTIONS GIRDERS O THRU T

TOP OF DECK ELEVATIONS ALONG ℄ GIRDER

Point	10	11	12	13	14	15	16	17	18	19	20
Girder O	215.12	215.29	215.38	215.47	215.57	215.68	215.80	215.93	216.08	216.24	216.42
Girder P	215.33	215.41	215.50	215.58	215.68	215.77	215.87	216.00	216.13	216.26	216.39
Girder Q	215.45	215.53	215.62	215.71	215.79	215.88	215.97	216.07	216.19	216.27	216.35
Girder R	215.47	215.55	215.63	215.71	215.79	215.86	215.94	216.02	216.11	216.23	216.32
Girder S	215.33	215.41	215.48	215.56	215.64	215.71	215.79	215.87	215.98	216.10	216.28
Girder T	215.21	215.29	215.36	215.44	215.51	215.59	215.66	215.75	215.87	216.04	216.25

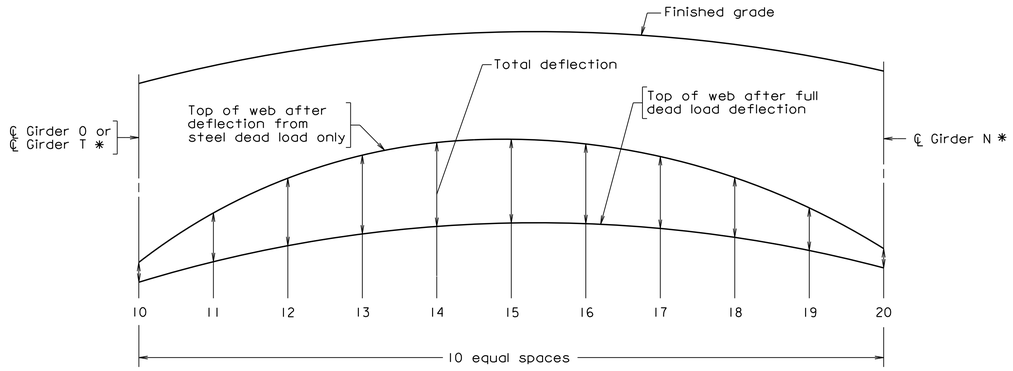

	Point	10	11	12	13	14	15	16	17	18	19	20
Girder U	△'s1	1/8''	3/16''	3/16''	3/16''	3/16''	1/4''	1/4''	1/4''	1/4''	1/4''	1/4''
	△'s2	0''	0''	0''	0''	0''	0''	0''	0''	0''	0''	0''
	△c	1/2''	9/16''	5/8''	5/8''	11/16''	11/16''	11/16''	11/16''	11/16''	5/8''	5/8''
	Total	5/8''	3/4''	13/16''	13/16''	7/8''	15/16''	15/16''	15/16''	15/16''	7/8''	7/8''
Girder V	△'s1	1''	1 1/16''	1 1/16''	1 1/8''	1 3/16''	1 1/4''	1 1/4''	1 5/16''	1 5/16''	1 3/8''	1 7/16''
	△'s2	0''	0''	0''	0''	0''	0''	0''	0''	0''	0''	0''
	△c	1/4''	1/4''	1/4''	1/4''	1/4''	1/4''	1/4''	1/4''	1/4''	1/4''	3/16''
	Total	1 1/4''	1 5/16''	1 5/16''	1 3/8''	1 7/16''	1 1/2''	1 9/16''	1 9/16''	1 9/16''	1 5/8''	1 5/8''
Girder W	△'s1	1/2''	1/2''	9/16''	9/16''	9/16''	9/16''	9/16''	1/2''	1/2''	7/16''	3/8''
	△'s2	0''	0''	0''	0''	0''	0''	0''	0''	0''	0''	0''
	△c	3/8''	3/8''	3/8''	7/16''	7/16''	7/16''	7/16''	7/16''	7/16''	7/16''	7/16''
	Total	7/8''	7/8''	15/16''	1''	1''	1''	1''	1''	15/16''	15/16''	7/8'' 13/16''
Girder X	△'s1	1/16''	1/16''	1/16''	1/16''	1/16''	1/16''	1/16''	1/16''	1/16''	0''	1/16''
	△'s2	0''	0''	0''	0''	0''	0''	0''	0''	0''	0''	0''
	△c	5/8''	5/8''	5/8''	5/8''	5/8''	5/8''	9/16''	9/16''	9/16''	9/16''	1/2''
	Total	11/16''	11/16''	11/16''	11/16''	11/16''	11/16''	5/8''	5/8''	5/8''	9/16''	9/16''

△'s1 = Deflection of girder from dead load of concrete deck slab, bolster and construction tolerance on Girder N.

△'s2 = Deflection of girder from dead load of concrete deck slab, bolster and construction tolerance on ramp.

△c = Deflection of girder from permanent dead load added after deck slab is cast (e.g. parapet).

The deflection of the Girders U through X at Girders N, O and T accounts for the deflection of Girders N, O and T after the connection between the girders has been made.

DEAD LOAD DEFLECTIONS GIRDERS U THRU X

TOP OF DECK ELEVATIONS ALONG ℄ GIRDER

Point	10	11	12	13	14	15	16	17	18	19	20
Girder U	215.57	215.61	215.66	215.72	215.78	215.85	215.94	216.04	216.15	216.30	216.47
Girder V	215.92	216.02	216.14	216.29	216.45	--	--	--	--	--	--
Girder W	215.48	215.53	215.59	215.65	215.71	215.76	215.83	215.90	215.96	216.02	216.08
Girder X	215.72	215.79	215.87	215.96	216.16	--	--	--	--	--	--

* Fabricator to note that Girders N, O and T shall be treated as an elastic support.

Not to scale

© 2022, Commonwealth of Virginia

257-38A_052.dgn

SGDLD1 MOD. 04-30-2020

COMMONWEALTH OF VIRGINIA
JEREMY SCHLUSSEL
Lic. No. 033974
PROFESSIONAL ENGINEER

Jeremy Schlussel
2022.07.08 18:25:02 -04'00'

WHITMAN REQUARDT & ASSOCIATES
RICHMOND, VA
STRUCTURAL ENGINEER

No.	Description	Date
	Revisions	

COMMONWEALTH OF VIRGINIA
DEPARTMENT OF TRANSPORTATION

STRUCTURE AND BRIDGE DIVISION

DEAD LOAD DEFLECTIONS AND SLAB ELEVATIONS SPAN e

Designed: KML
Drawn: CRR
Checked: LDC

Date	Plan No.	Sheet No.
July 2022	257-38A	52 of 125

STATE	FEDERAL AID		STATE		SHEET NO.
	ROUTE	PROJECT	ROUTE	PROJECT	
VA.	—		95	0095-076-299, B688	53

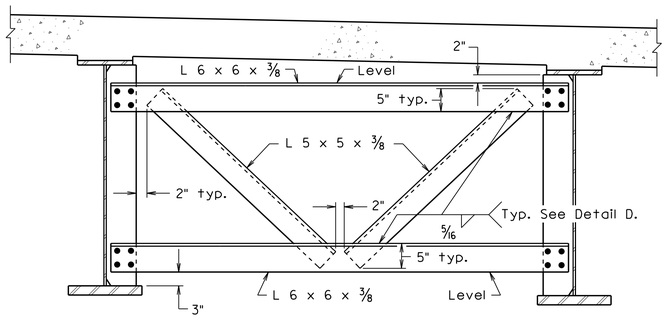

INTERMEDIATE CROSS FRAME - CF1

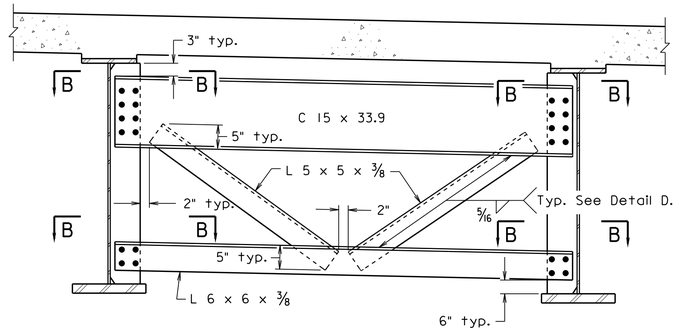

END CROSS FRAME - CF2

Note:

All welding of structural steel and quality control inspection of welds, including field welding and quality control inspection of field welding, shall be the responsibility of the Contractor in accordance with Section 407.04(l) of the Specifications.

For Section A, Section B, Section C and Detail D, see sheet 53a.

Connector angles shall be used on existing girders where cross frames are to be installed. See Connector Angle Detail on sheet 53a.

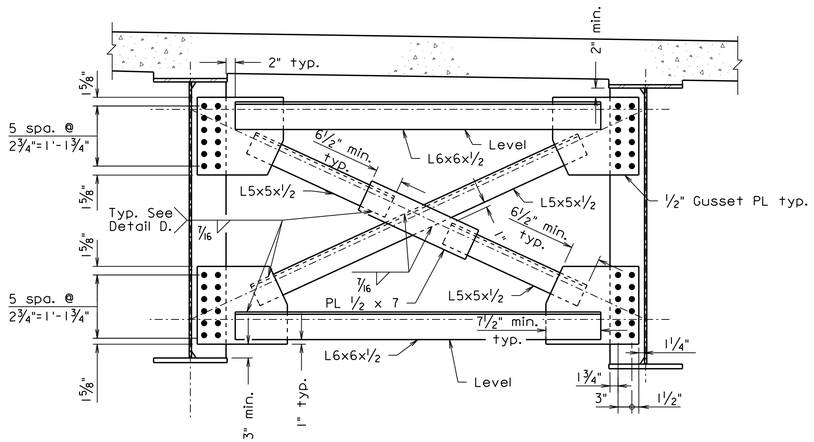

INTERMEDIATE CROSS FRAME - CF5

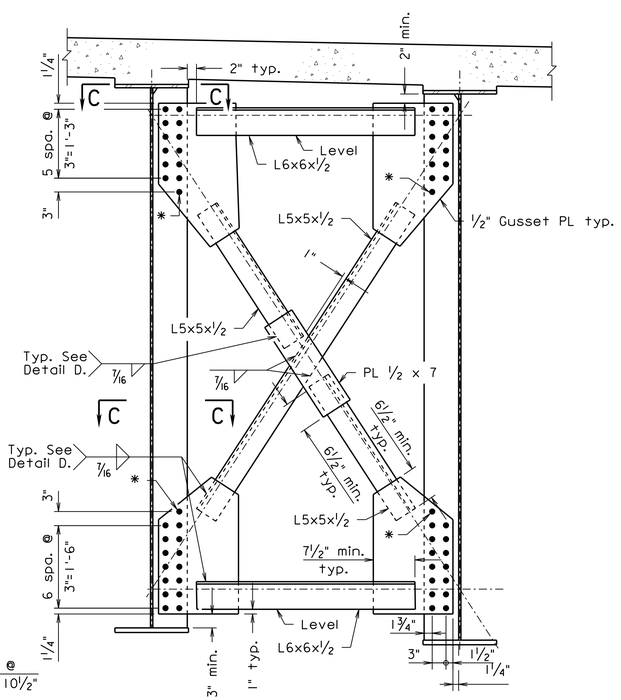

INTERMEDIATE CROSS FRAME - CF5A

* Provide bolt as necessary to maintain stitching and sealing typ.

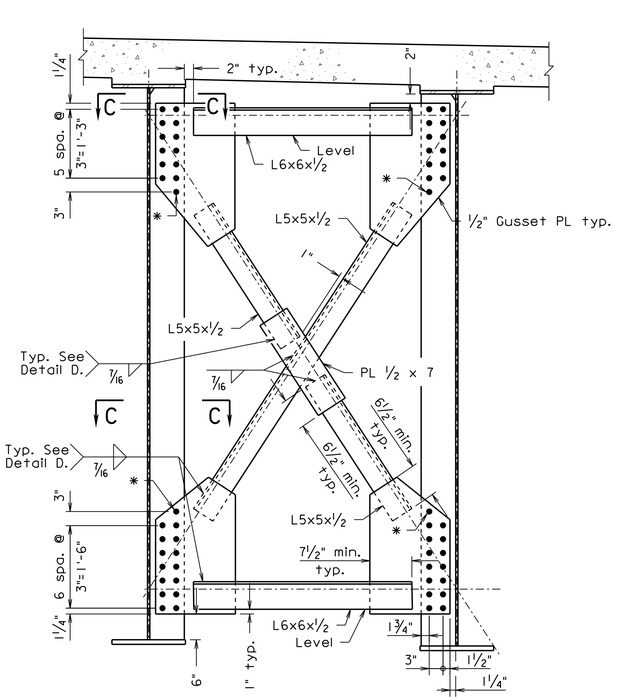

INTERMEDIATE CROSS FRAME - CF8

* Provide bolt as necessary to maintain stitching and sealing typ.

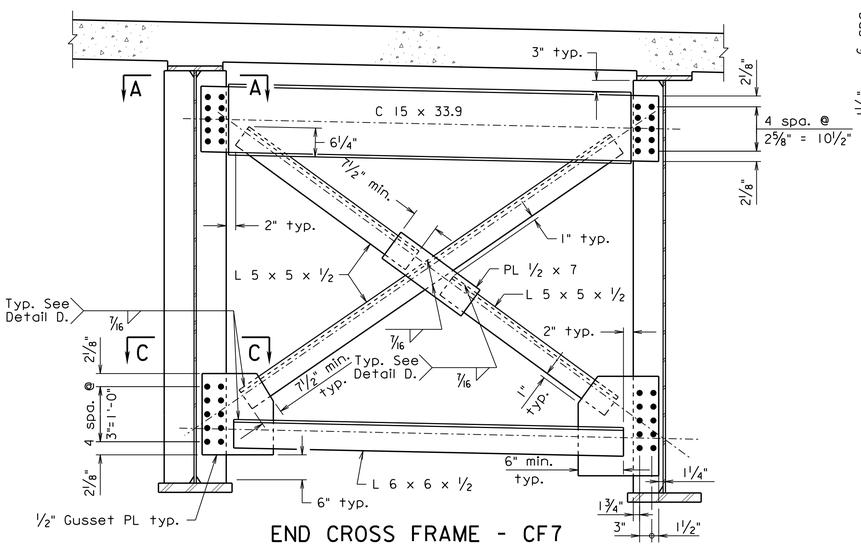

END CROSS FRAME - CF7

257-38A_053.dgn

BCF-4 MOD. 04-30-2020

COMMONWEALTH OF VIRGINIA
JEREMY SCHLUSSEL
Lic. No. 033974
PROFESSIONAL ENGINEER

Jeremy Schlussel
2022.07.08 18:25:27 -04'00'

WHITMAN REQUARDT & ASSOCIATES
RICHMOND, VA
STRUCTURAL ENGINEER

Not to scale

© 2022, Commonwealth of Virginia

No.	Description	Date
	Revisions	

COMMONWEALTH OF VIRGINIA
DEPARTMENT OF TRANSPORTATION

STRUCTURE AND BRIDGE DIVISION

CROSS FRAME DETAILS I OF 2

Designed: CRR	Date	Plan No.	Sheet No.
Drawn: CRR	July 2022	257-38A	53 of 125
Checked: MRD			

STATE	FEDERAL AID		STATE		SHEET NO.
	ROUTE	PROJECT	ROUTE	PROJECT	
VA.	—		95	0095-076-299, B688	53a

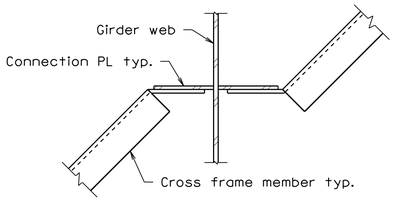

SECTION A-A

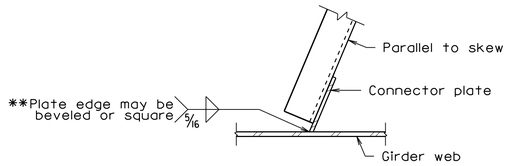

SECTION B-B

** Square plate edge may be used if in accordance with tolerances.

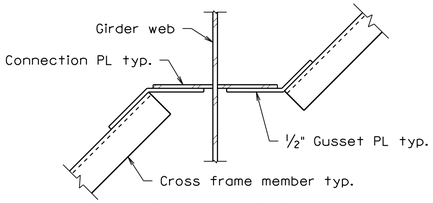

SECTION C-C

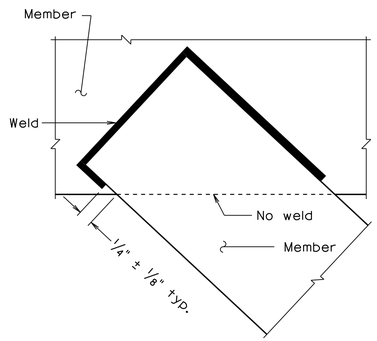

DETAIL D

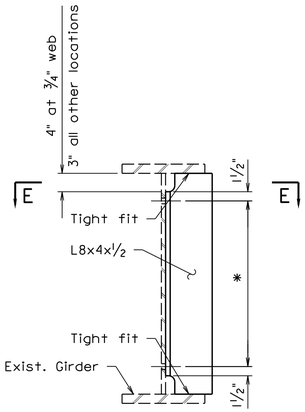

CONNECTOR ANGLE DETAIL

* Number of bolts varies with web depth. Bolt spacing shall provide 4½" maximum spacing. At north traffic signal support bolt spacing shall be as noted in details on sheet 59.

Note:

All welding of structural steel and quality control inspection of welds, including field welding and quality control inspection of field welding, shall be the responsibility of the Contractor in accordance with Section 407.04(l) of the Specifications.

Webs and flanges shall be fabricated, tested and inspected in accordance with fracture critical requirements and in accordance with Clause 12 of the AWS-D1.5 Bridge Welding Code.

For locations of sections and details on this sheet, see sheet 53.

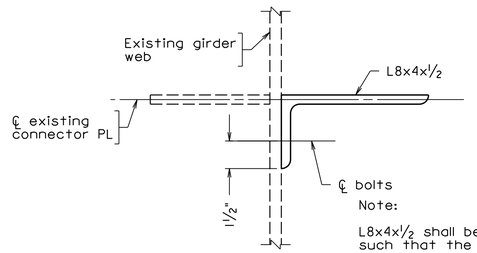

Note:

L8x4x½ shall be located such that the centerline of the longer leg is in line with the centerline of the existing connector PL.

SECTION E-E

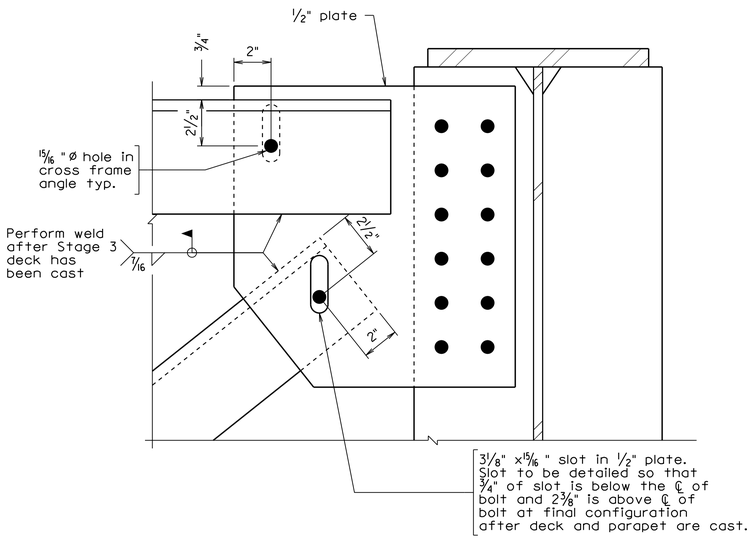

STAGED CONSTRUCTION
CROSS FRAME CONNECTION DETAIL

Staged construction connection detail shall be used on the cross frames at Girder L.

Not to scale

© 2022, Commonwealth of Virginia

BCF-4 MOD. 04-30-2020

257-38A_053a.dgn

COMMONWEALTH OF VIRGINIA
JEREMY SCHLUSSEL
Lic. No. 033974
PROFESSIONAL ENGINEER

Jeremy Schlussel
2022.07.08 18:28:50 -04'00'

WHITMAN REQUARDT & ASSOCIATES
RICHMOND, VA
STRUCTURAL ENGINEER

No.	Description	Date
	Revisions	

COMMONWEALTH OF VIRGINIA
DEPARTMENT OF TRANSPORTATION

STRUCTURE AND BRIDGE DIVISION

CROSS FRAME DETAILS 2 OF 2

Designed: RW	Date	Plan No.	Sheet No.
Drawn: CRR			
Checked: KM	July 2022	257-38A	53a of 125

STATE	FEDERAL AID		STATE		SHEET NO.
	ROUTE	PROJECT	ROUTE	PROJECT	
VA.	—		95	0095-076-299, B688	54

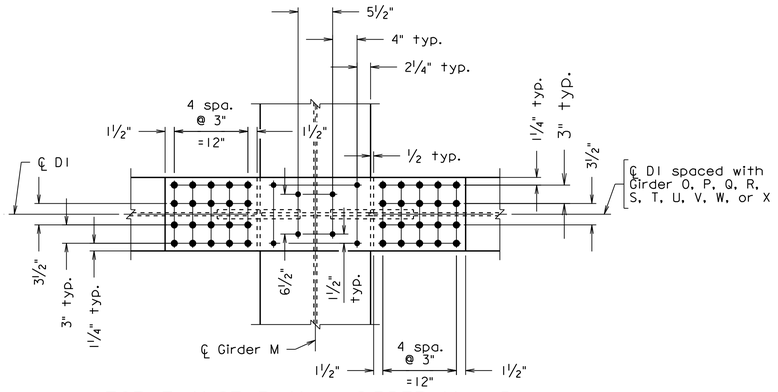

TOP FLANGE PLAN - GIRDER M - D1

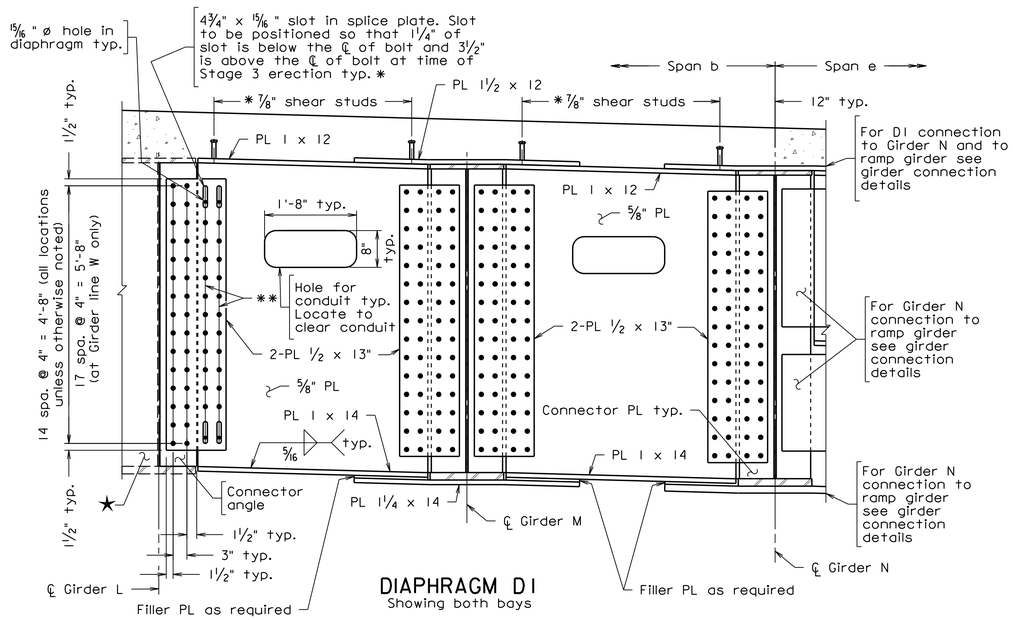

DIAPHRAGM D1
Showing both bays

★Exist. cross frames and connector plates not shown on this face

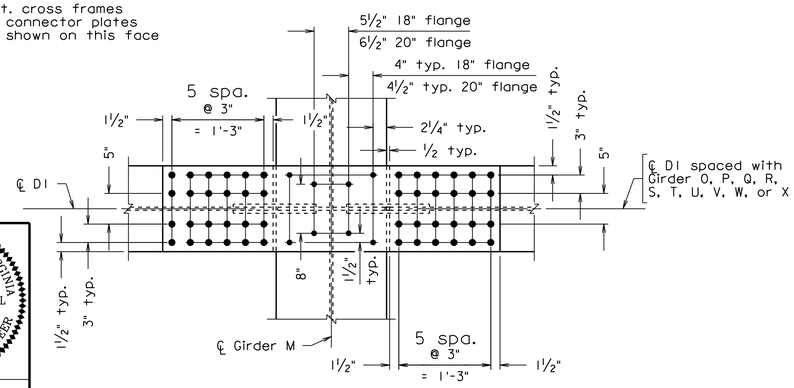

BOTTOM FLANGE PLAN - GIRDER M - D1

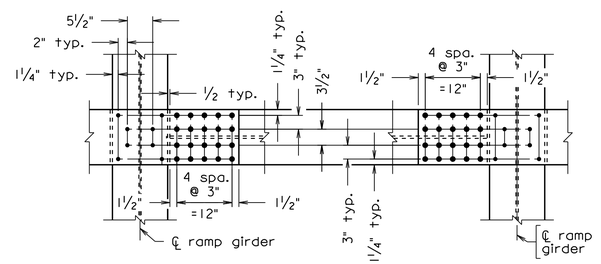

TOP FLANGE PLAN - D2

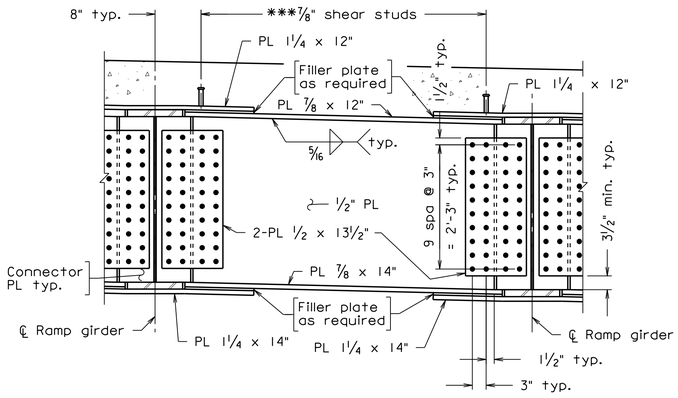

DIAPHRAGM D2

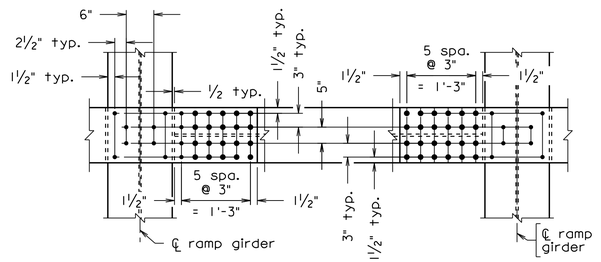

BOTTOM FLANGE PLAN - D2

Notes:

All welding of structural steel and quality control inspection of welds, including field welding and quality control inspection of field welding, shall be the responsibility of the Contractor in accordance with Section 407.04(l) of the Specifications.

All flanges and webs are considered tension members.

Diaphragms D1 and D2 are considered primary members and shall be subject to Charpy V-Notch impact requirements.

All proposed structural steel on this sheet shall be fabricated, tested and inspected in accordance with fracture critical requirements and in accordance with Clause 12 of the AWS-D1.5 Bridge Welding Code.

Depth of diaphragm web plate shall match depth of girder web plate at connection location. Note that diaphragms at girder connections for Girders T, W and X are located within the parabolic haunch of Girders M and N.

* Only bolts in slots shall be used in connection between web splice plate and D1 at Girder L when pouring deck in Stage 3. After Spans b, c and e decks are poured and prior to the barriers being installed the remaining bolts shall be installed and fully tightened.

** Field drill holes in web splice plate after Spans b, c and e decks are poured.

Spacing of stud shear connectors at connections shall be adjusted to clear edges of splice plates and locations of bolts allowing for proper clearance to meet bolt tightening requirements. Stud shear connectors shall have a minimum edge distance of 1½". The adjusted spacing shall be shown on the shop drawings.

All bolts shall be ⅞" ø high strength ASTM A325 Type 1.

All bolt holes shall be standard size.

*** 3-⅞" ø stud shear connectors per row at 6" maximum spacing.

Splice connection shall have a class B surface.

Connector angles shall be used on existing girders where diaphragms are to be installed. See Connector Angle Detail on sheet 53a.

For diaphragm and connection type locations, see sheets 38 and 39.

For ramp girder details see sheet 43.

For connector angle detail, see sheet 53a.

For other Girder Connection Details, see sheets 55, 56 and 57.

257-38A_054.dgn

COMMONWEALTH OF VIRGINIA
JEREMY SCHLUSSEL
Lic. No. 033974
PROFESSIONAL ENGINEER

Jeremy Schlussel
2022.07.08 18:35:11 -04'00'

WHITMAN REQUARDT & ASSOCIATES
RICHMOND, VA
STRUCTURAL ENGINEER

Scale: ¾" = 1'-0" unless otherwise noted.

© 2022, Commonwealth of Virginia

No.	Description	Date
	Revisions	

COMMONWEALTH OF VIRGINIA
DEPARTMENT OF TRANSPORTATION

STRUCTURE AND BRIDGE DIVISION

DIAPHRAGM DETAILS

Designed: MRD	Date	Plan No.	Sheet No.
Drawn: C.R.M.	July 2022	257-38A	54 of 125
Checked: KWL			

STATE	FEDERAL AID		STATE		SHEET NO.
	ROUTE	PROJECT	ROUTE	PROJECT	
VA.	—		95	0095-076-299, B688	55

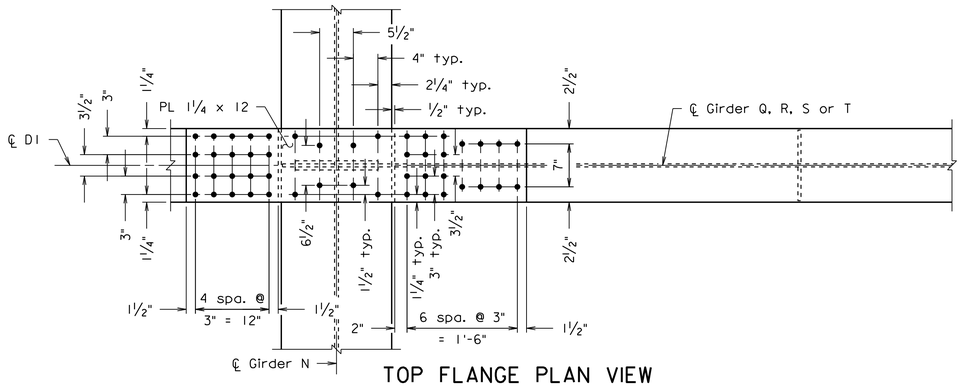

TOP FLANGE PLAN VIEW

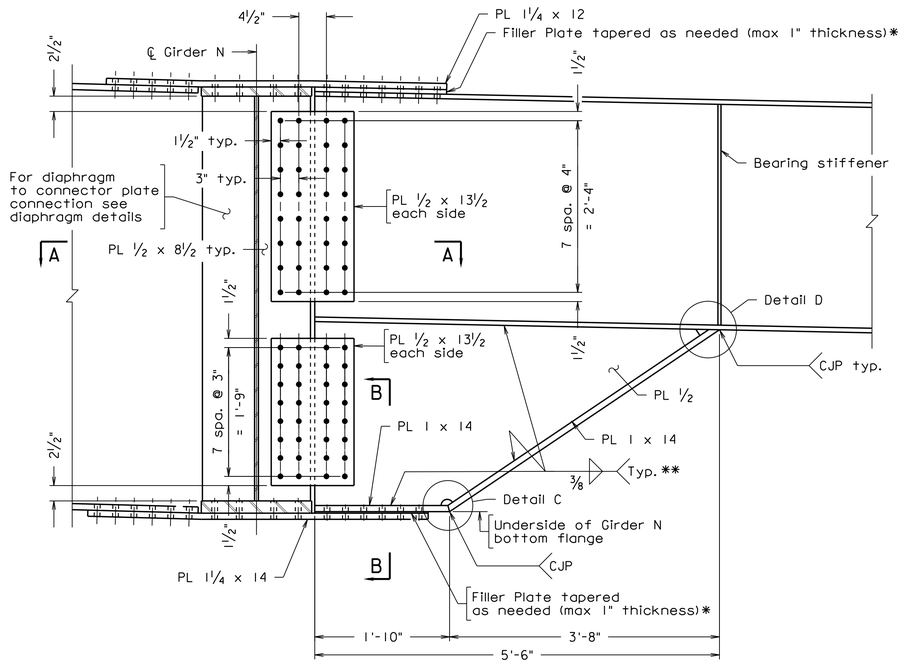

CONNECTION DETAIL TYPE I

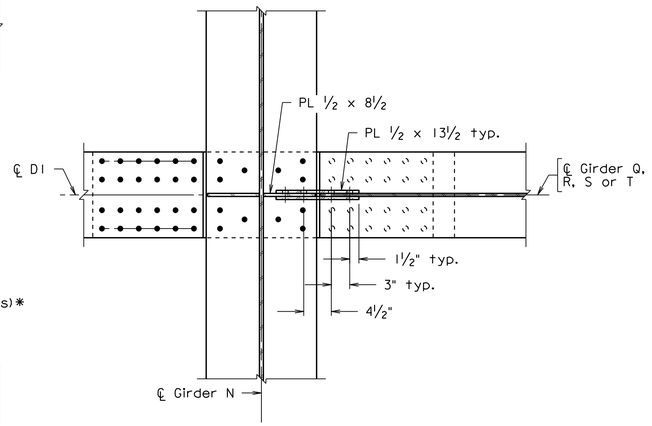

SECTION A-A

Notes:

All proposed structural steel on this sheet shall be fabricated, tested and inspected in accordance with fracture critical requirements and in accordance with Clause 12 of the AWS-D1.5 Bridge Welding Code.

All flanges and webs are considered tension members.

The depth of lower girder web plate shall be fabricated such that the top of web of the girder is in line with Girder N top of web and the bottom of bottom flange plate is in line with the bottom of bottom flange of Girder N. Note that connection at Girder T is located within the parabolic haunch of Girder N.

* Filler plates may be tapered in both directions to account for camber and profile grade of both girders at connection.

Splice plates shall be fabricated with the direction of roll in direction of primairy girder.

Spacing of stud shear connectors at connections shall be adjusted to clear edges of splice plates and locations of bolts allowing for proper clearance to meet bolt tightening requirements. Stud shear connectors shall have a minimum edge distance of 1½". The adjusted spacing shall be shown on the shop drawings.

Complete joint penetration welds indicated in Detail C and Detail E shall be inspected by ultrasonic testing in accordance with AWS D1.5 and VTM 30.

** Full length of fillet welds shall be inspected by magnetic partical testing.

Splice connection shall have a class B surface.

For locations of connection type details, see sheets 38 and 39.

For ramp girder details, see sheet 43.

For diaphragm details, see sheet 54.

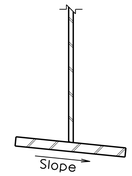

Slope flange to match instantaneous slope of bottom flange of Girder N at connection

SECTION B-B
AT GIRDER T, W AND X ONLY
Not to scale

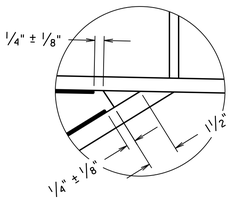

DETAIL D
Not to scale

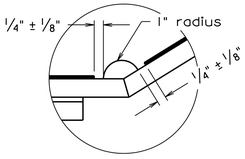

DETAIL C
Not to scale

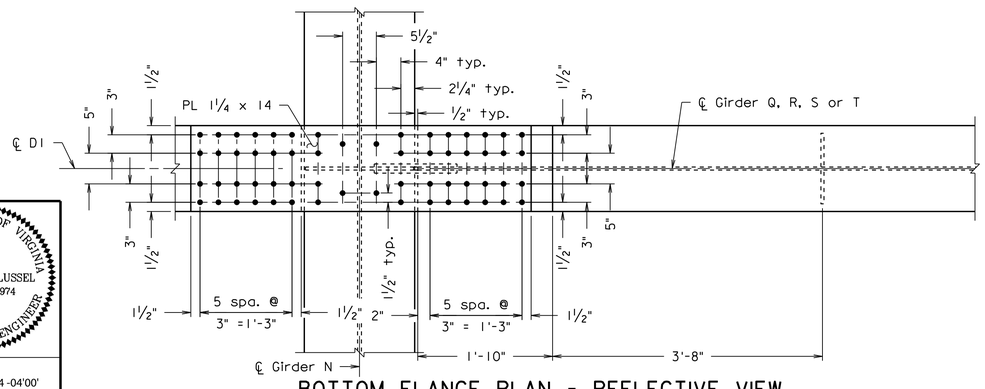

BOTTOM FLANGE PLAN - REFLECTIVE VIEW

257-38A_055.dgn

COMMONWEALTH OF VIRGINIA
JEREMY SCHLUSSEL
Lic. No. 033974
PROFESSIONAL ENGINEER

Jeremy Schlussel
2022.07.08 18:35:34 -04'00'

WHITMAN REQUARDT & ASSOCIATES
RICHMOND, VA
STRUCTURAL ENGINEER

Scale: 1" = 1'-0", unless otherwise noted.

© 2022, Commonwealth of Virginia

No.	Description	Date
	Revisions	

COMMONWEALTH OF VIRGINIA
DEPARTMENT OF TRANSPORTATION

STRUCTURE AND BRIDGE DIVISION

GIRDER CONNECTION DETAILS I OF 4

Designed: KML	Date	Plan No.	Sheet No.
Drawn: DRB	July 2022	257-38A	55 of 125
Checked: WRA			

STATE	FEDERAL AID		STATE		SHEET NO.
	ROUTE	PROJECT	ROUTE	PROJECT	
VA.	—		95	0095-076-299, B688	56

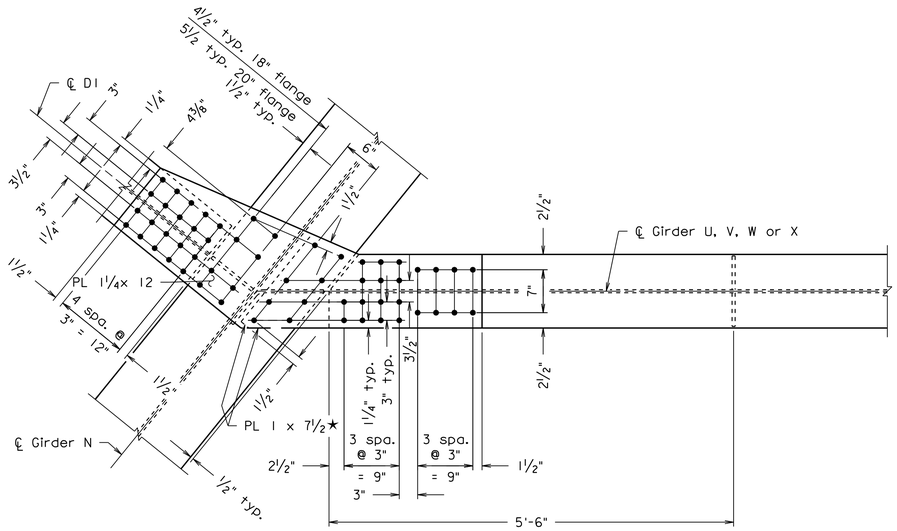

TOP FLANGE PLAN VIEW

Web plates not shown for clarity

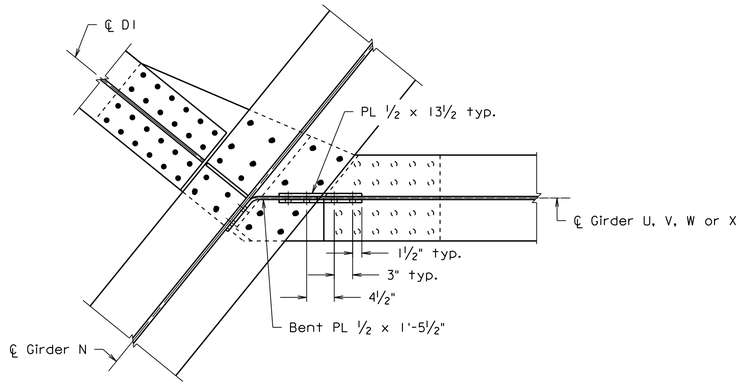

SECTION A-A

Notes:

All proposed structural steel on this sheet shall be fabricated, tested and inspected in accordance with fracture critical requirements and in accordance with Clause 12 of the AWS-D1.5 Bridge Welding Code.

All flanges and webs are considered tension members.

The depth of lower girder web plate shall be fabricated such that the top of web of the girder is in line with Girder N top of web and the bottom of bottom flange plate is in line with the bottom of bottom flange of Girder N. Note that connections at Girders W and X are located within the parabolic haunch of Girder N.

*Filler plates may be tapered in both directions to account for camber and profile grade of both both girders at connection.

Spacing of stud shear connectors at connections shall be adjusted to clear edges of splice plates and locations of bolts allowing for proper clearance to meet bolt tightening requirements. Stud shear connectors shall have a minimum edge distance of 1½". The adjusted spacing shall be shown on the shop drawings.

Complete joint penetration welds indicated in Detail C and Detail D shall be inspected by UT in accordance with AWS D1.5 and VTM 30.

**Full length of fillet weld between web and flange shall be inspected by magnetic particle testing.

★Extend bolted flange plate to limits of flange splice plate unless otherwise noted.

Splice connection shall have a class B surface.

Splice plates shall be cut with the direction of roll parallel to Girder U, V W or X.

For locations of connection type details, see sheets 38 and 39.

For ramp girder details, see sheet 43.

For diaphragm details, see sheet 54.

For Detail C, Detail D and Section B, see sheet 55.

For Detail A, see sheet 57a.

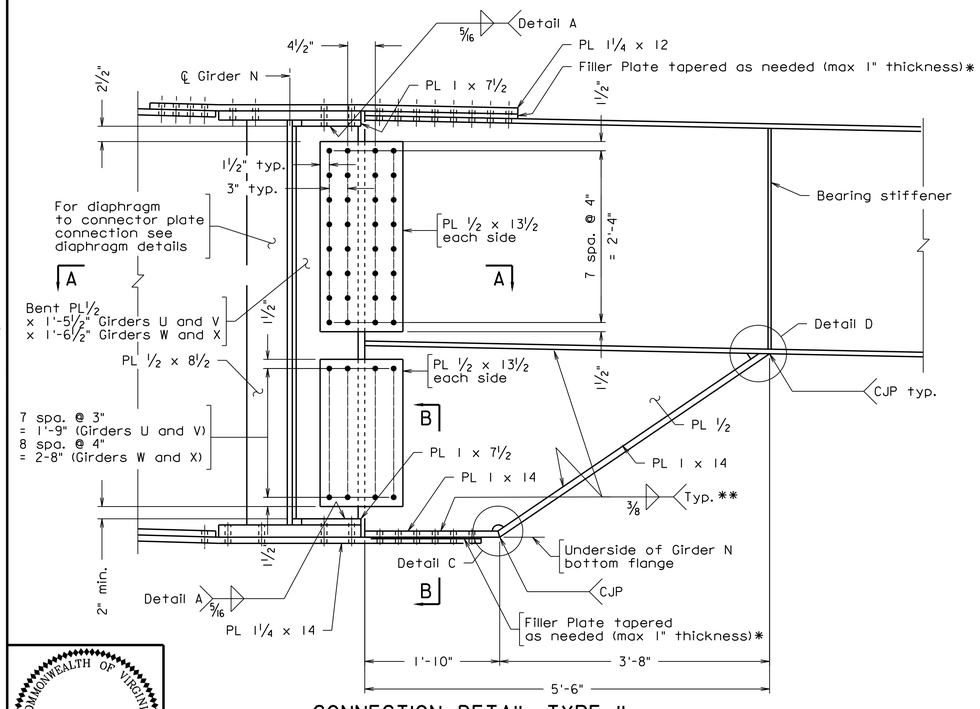

CONNECTION DETAIL TYPE II

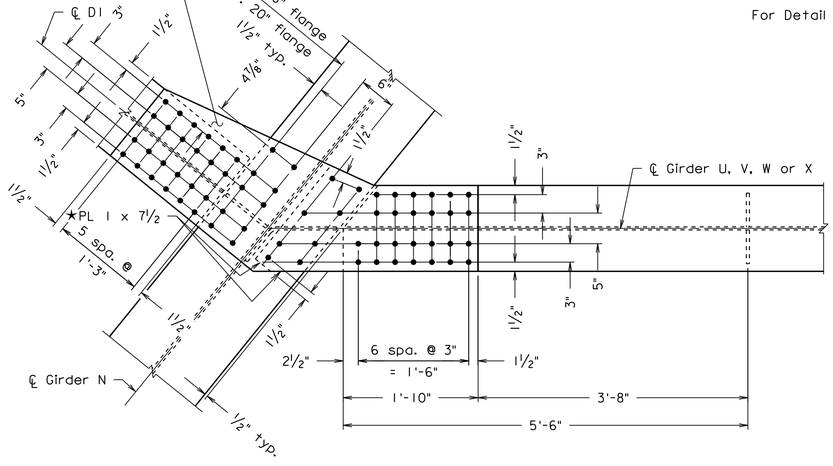

BOTTOM FLANGE PLAN - REFLECTIVE VIEW

Web plates not shown for clarity

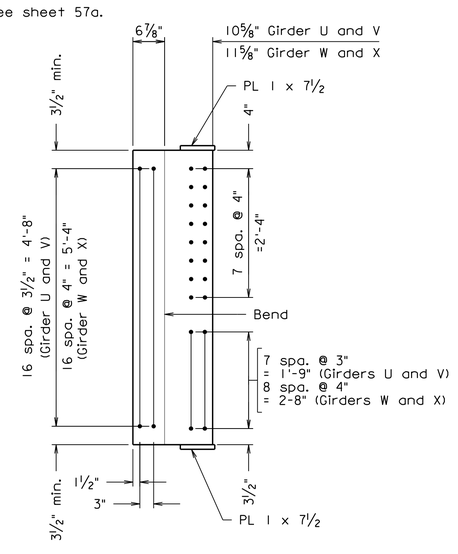

BENT PLATE SUB ASSEMBLY ELEVATION

scale: ¾" = 1'-0"

COMMONWEALTH OF VIRGINIA
JEREMY SCHLUSSEL
Lic. No. 033974
PROFESSIONAL ENGINEER
Jeremy Schlussel
2022.07.08 18:35:55 -04'00'
WHITMAN REQUARDT & ASSOCIATES
RICHMOND, VA
STRUCTURAL ENGINEER

257-38A_056.dgn

Scale: 1" = 1'-0"

© 2022, Commonwealth of Virginia

No.	Description	Date
Revisions		

COMMONWEALTH OF VIRGINIA
DEPARTMENT OF TRANSPORTATION

STRUCTURE AND BRIDGE DIVISION

GIRDER CONNECTION DETAILS 2 OF 4

Designed: KML	Date	Plan No.	Sheet No.
Drawn: BRB	July 2022	257-38A	56 of 125
Checked: WRA			

STATE	FEDERAL AID		STATE		SHEET NO.
	ROUTE	PROJECT	ROUTE	PROJECT	
VA.	—		95	0095-076-299, B688	57

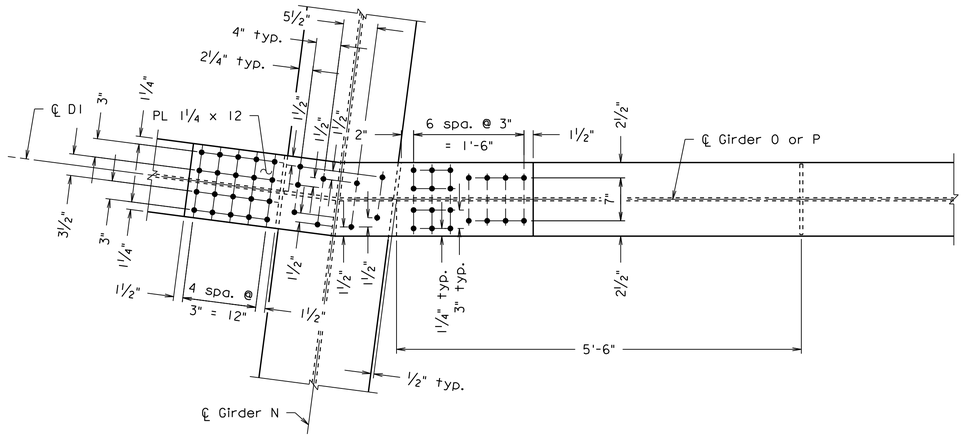

TOP FLANGE PLAN VIEW

Web plates not shown for clarity

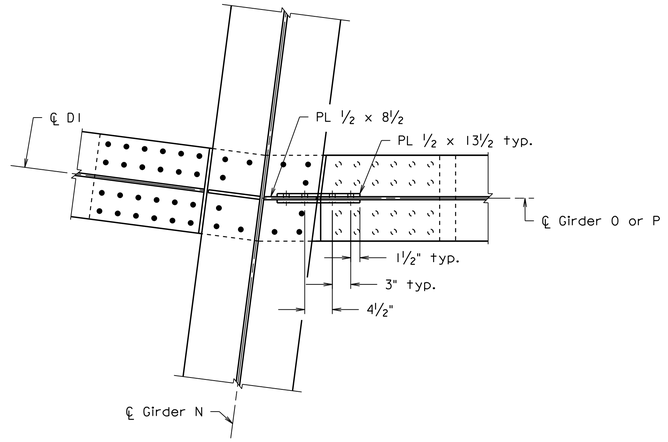

SECTION A-A

Notes:

All proposed structural steel on this sheet shall be fabricated, tested and inspected in accordance with fracture critical requirements and in accordance with Clause 12 of the AWS-D1.5 Bridge Welding Code.

All flanges and webs are considered tension members.

The depth of lower girder web plate shall be fabricated such that the top of web of the girder is in line with Girder N top of web and the bottom of bottom flange plate is in line with the bottom of bottom flange of Girder N.

* Filler plates may be tapered in both directions to account for camber and profile grade of both both girders at connection.

Splice connection shall have a class B surface.

Spacing of stud shear connectors at connections shall be adjusted to clear edges of splice plates and locations of bolts allowing for proper clearance to meet bolt tightening requirements. Stud shear connectors shall have a minimum edge distance of 1½". The adjusted spacing shall be shown on the shop drawings.

Complete joint penetration welds indicated in Detail C and Detail D shall be inspected by UT in accordance with AWS D1.5 and VTM 30.

** Full length fillet weld between web and flange shall be inspected by magnetic particle testing.

For locations of connection type details, see sheets 38 and 39.

For ramp girder details, see sheet 43.

For diaphragm details, see sheet 54.

For Detail C and Detail D, see sheet 55.

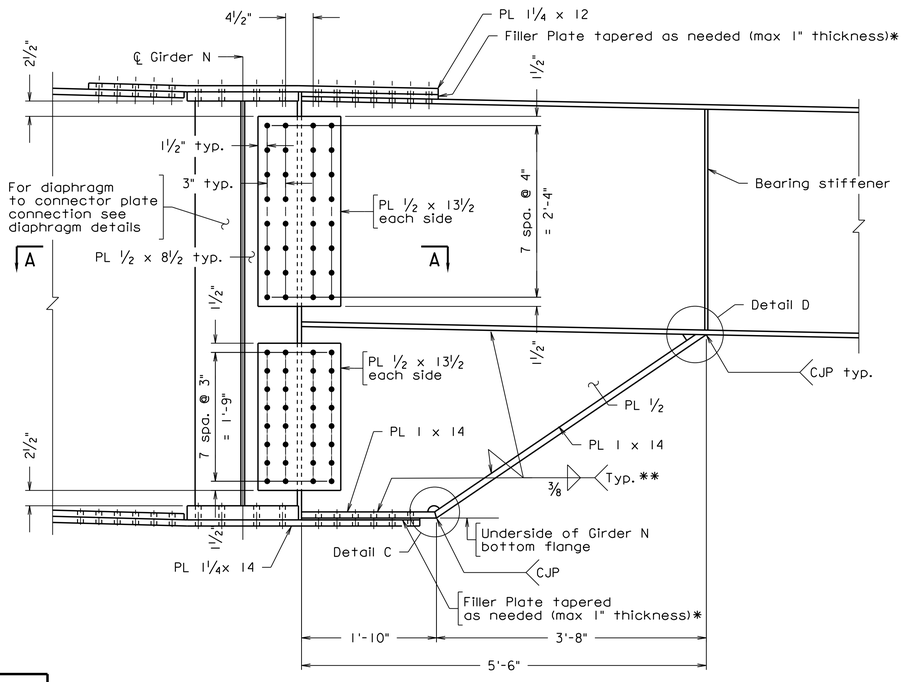

CONNECTION DETAIL TYPE III

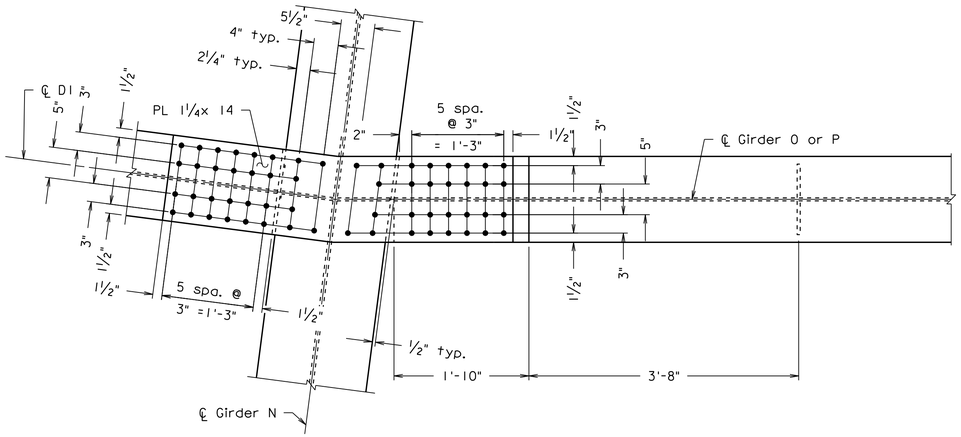

BOTTOM FLANGE PLAN - REFLECTIVE VIEW

Web plates not shown for clarity

257-38A_057.dgn

JEREMY SCHLUSSEL
Lic. No. 033974
COMMONWEALTH OF VIRGINIA
PROFESSIONAL ENGINEER

Jeremy Schlussel
2022.07.08 18:34:50 -04'00'

WHITMAN REQUARDT & ASSOCIATES
RICHMOND, VA
STRUCTURAL ENGINEER

Scale: 1" = 1'-0"

© 2022, Commonwealth of Virginia

No.	Description	Date
	Revisions	

COMMONWEALTH OF VIRGINIA
DEPARTMENT OF TRANSPORTATION

STRUCTURE AND BRIDGE DIVISION

GIRDER CONNECTION DETAILS 3 OF 4

Designed: KML	Date	Plan No.	Sheet No.
Drawn: BRB	July 2022	257-38A	57 of 125
Checked: WRA			

STATE	FEDERAL AID		STATE		SHEET NO.
	ROUTE	PROJECT	ROUTE	PROJECT	
VA.	—		95	0095-076-299, B688	57a

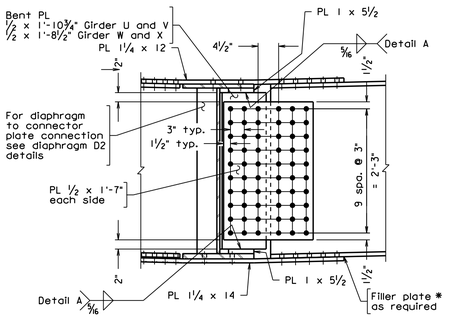

CONNECTION DETAIL TYPE IV

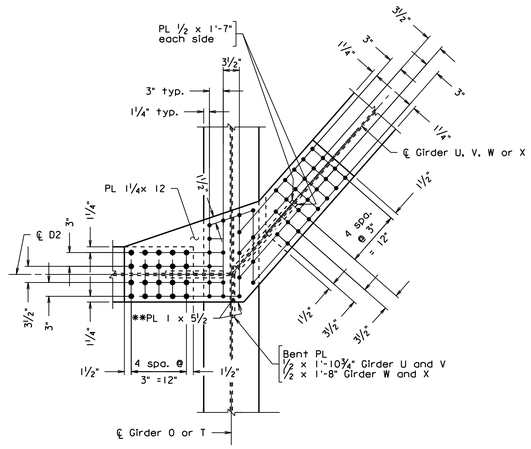

TOP FLANGE PLAN VIEW

Web plates not shown for clarity

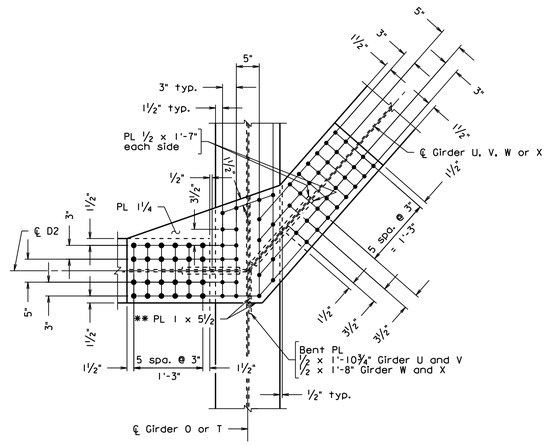

BOTTOM PLAN FLANGE REFLECTIVE VIEW

Web plates not shown for clarity

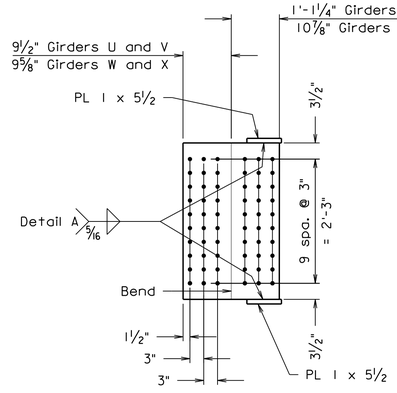

BENT PLATE SUB ASSEMBLY ELEVATION

scale: ¾" = 1'-0"

Notes:

All proposed structural steel on this sheet shall be fabricated, tested and inspected in accordance with fracture critical requirements and in accordance with Clause 12 of the AWS-D1.5 Bridge Welding Code.

All flanges and webs are considered tension members.

The depth of lower girder web plate shall be fabricated such that the top of web of the girder is in line with Girder O or T top of web and the bottom of bottom flange plate is in line with the bottom of bottom flange of Girder O or T.

* Filler plates may be tapered in both directions to account for camber and profile grade at both girders at connection.

Splice plates shall be fabricated with the direction of roll in direction of primary girder.

Splice connection shall have a class B surface.

Spacing of stud shear connectors at connections shall be adjusted to clear edges of splice plates and locations of bolts allowing for proper clearance to meet bolt tightening requirements. Stud shear connectors shall have a minimum edge distance of 1½". The adjusted spacing shall be shown on the shop drawings.

** Extend bolted flange plate to limits of flange splice plate.

Contractor shall consider bolt entering clearances and requirements for DTI washers in web splice connection at acute corner for proper verification of bolt tightening.

For locations of girder connections, see sheets 38 and 39.

For ramp girder details see sheet 43.

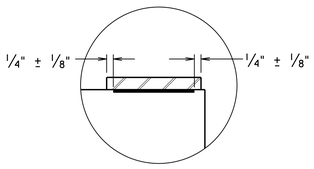

DETAIL A

257-38A_057a.dgn

COMMONWEALTH OF VIRGINIA
JEREMY SCHLUSSEL
Lic. No. 033974
PROFESSIONAL ENGINEER

Jeremy Schlussel
2022.07.08 18:33:08 -04'00'

WHITMAN REQUARDT & ASSOCIATES
RICHMOND, VA
STRUCTURAL ENGINEER

Scale: 1" = 1'-0" unless otherwise noted.

© 2022, Commonwealth of Virginia

No.	Description	Date
	Revisions	

COMMONWEALTH OF VIRGINIA
DEPARTMENT OF TRANSPORTATION

STRUCTURE AND BRIDGE DIVISION

GIRDER CONNECTION DETAILS 4 OF 4

Designed: C.R.B.	Date	Plan No.	Sheet No.
Drawn: C.R.B.	July 2022	257-38A	57a of 125
Checked: M.R.H.			

STATE	FEDERAL AID		STATE		SHEET NO.
	ROUTE	PROJECT	ROUTE	PROJECT	
VA.	—		95	0095-076-299, B688	58

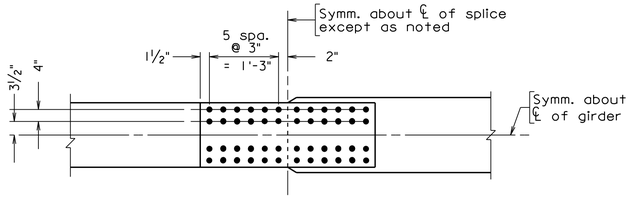

TOP FLANGE

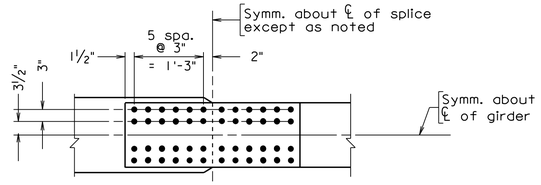

TOP FLANGE

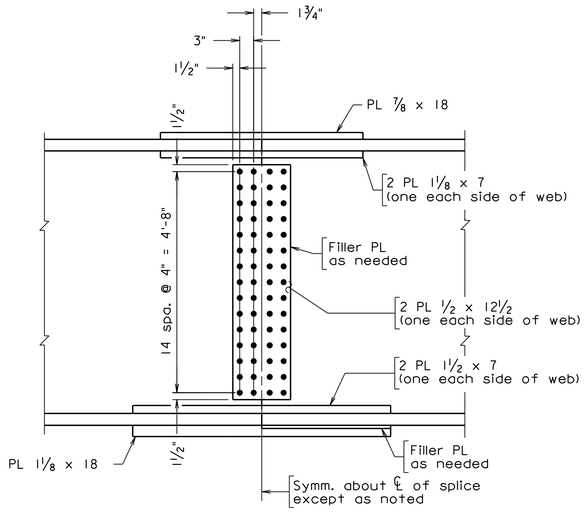

WEB

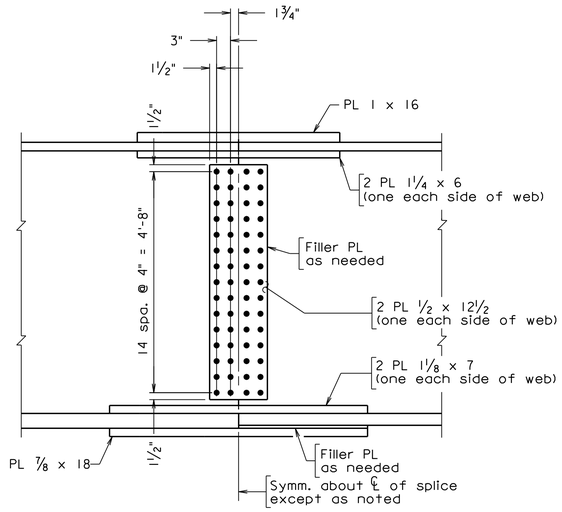

WEB

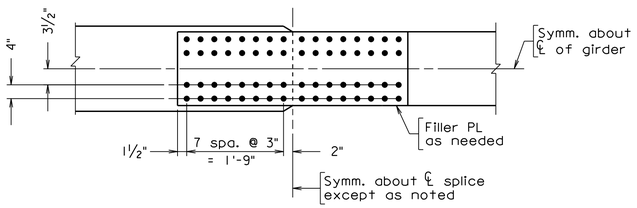

BOTTOM FLANGE
FIELD SPLICE A

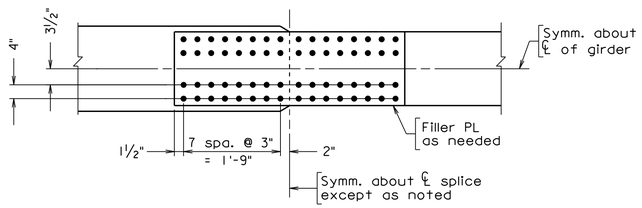

BOTTOM FLANGE
FIELD SPLICE B

Notes:

Splice plates (not including filler plates) for Field Splice A shall be fabricated, tested and inspected in accordance with fracture critical requirements and in accordance with Clause 12 of the AWS-D1.5 Bridge Welding Code.

For bolted field splice locations see Framing Plan on sheet 38.

For details of girders at splice locations, see sheet 41.

257-38A_058.dgn

COMMONWEALTH OF VIRGINIA
JEREMY SCHLUSSEL
Lic. No. 033974
PROFESSIONAL ENGINEER

Jeremy Schlussel
2022.07.08 18:33:46 -04'00'

WHITMAN REQUARDT & ASSOCIATES
RICHMOND, VA
STRUCTURAL ENGINEER

Not to scale

© 2022. Commonwealth of Virginia

No.	Description	Date
Revisions		

COMMONWEALTH OF VIRGINIA
DEPARTMENT OF TRANSPORTATION

STRUCTURE AND BRIDGE DIVISION

GIRDER SPLICE DETAILS

Designed: KML	Date	Plan No.	Sheet No.
Drawn: BRB	July 2022	257-38A	58 of 125
Checked: WRA			

STATE	FEDERAL AID		STATE		SHEET NO.
	ROUTE	PROJECT	ROUTE	PROJECT	
VA.	—		95	0095-076-299, B688	59

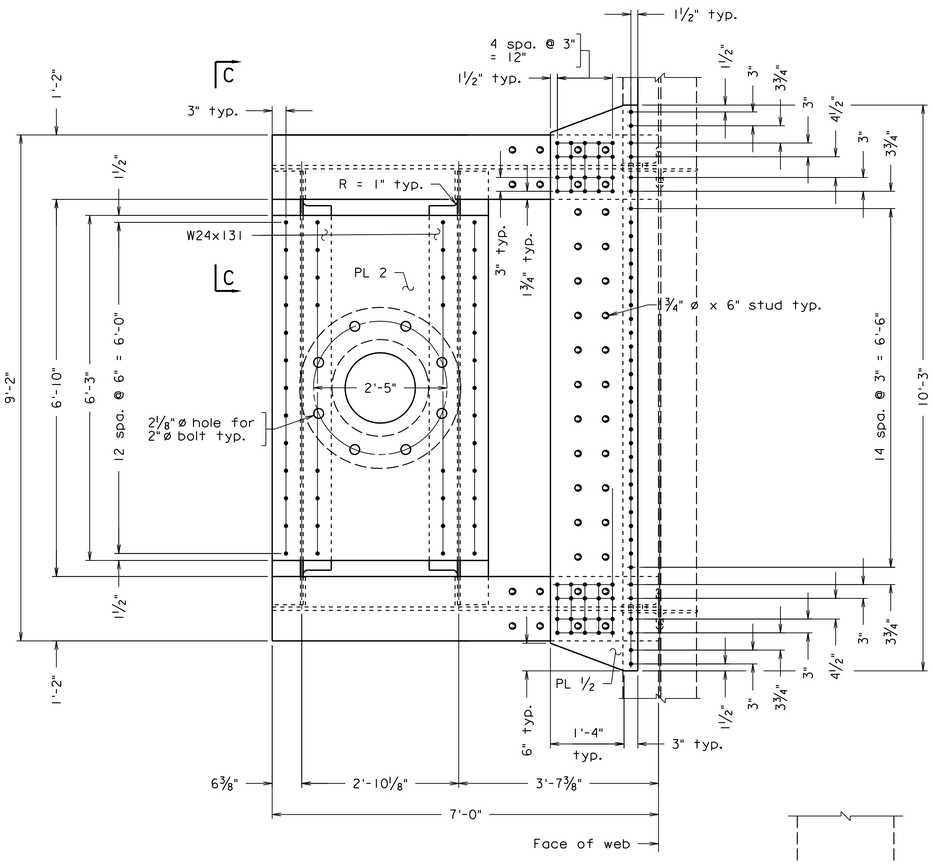

TOP VIEW A-A

Deck and curb not shown for clarity.

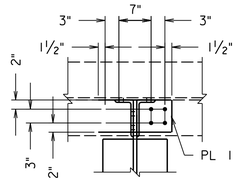

SECTION D-D

Notes:

For traffic signal support location, see sheet 39.

Factored loads used for design:
Axial: 11 kips
Shear: 8 kips
Moment: 197 k-ft
Torsion: 204 k-ft

All bolts on this sheet are ⅞" ø unless otherwise noted and use standard size holes.

For traffic signal conduit system, see sheet 91.

All proposed structural steel on this sheet shall be fabricated, tested and inspected in accordance with fracture critical requirements and in accordance with Clause 12 of the AWS-D1.5 Bridge Welding Code.

All flanges and webs are considered tension members.

Complete joint penetration welds shall be inspected by UT in accordance with AWS D1.5 and VTM 30.

Spacing of stud shear connectors at connections shall be adjusted to clear edges of splice plates and locations of bolts allowing for proper clearance to meet bolt tightening requirements. Stud shear connectors shall have a minimum edge distance of 1½". The adjusted spacing shall be shown on the shop drawings.

Holes in existing girder shall be made utilizing a low profile magnetic drill. Edges shall be ground smooth and shall be zone coated.

W24x131 as well as 2" support plate shall be hot-dipped galavnized in accordance with the specifications.

Signal pole support shall be installed level. Contractor may elect to field drill holes in W24x131 to ensure that light pole support plate will be level in its final configuration.

For connector angle detail, see sheet 53a.

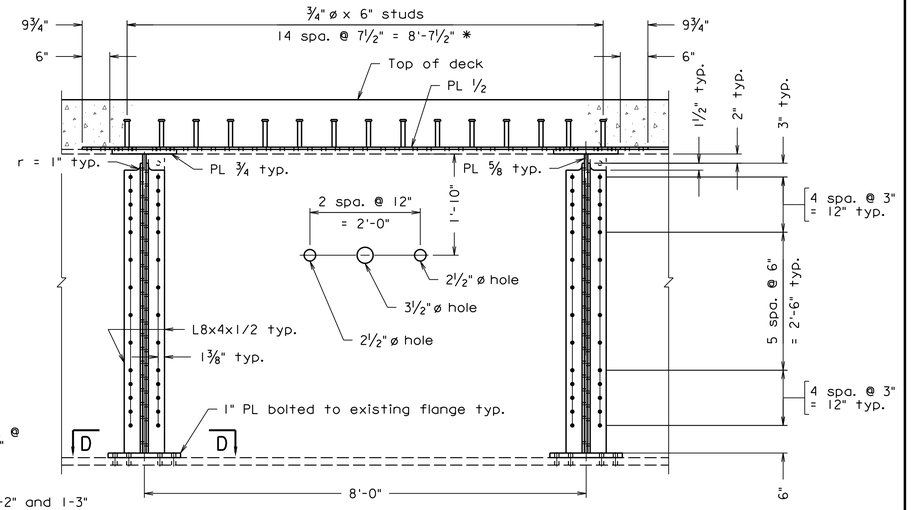

SECTION B-B

* Shear studs can be excluded where they conflict with top flange connection angle bolts.

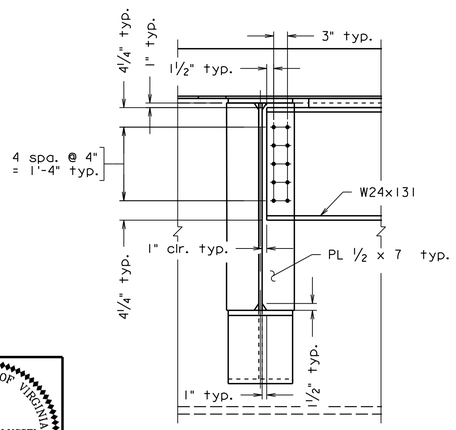

VIEW C-C

Connections to girder not show for clarity.

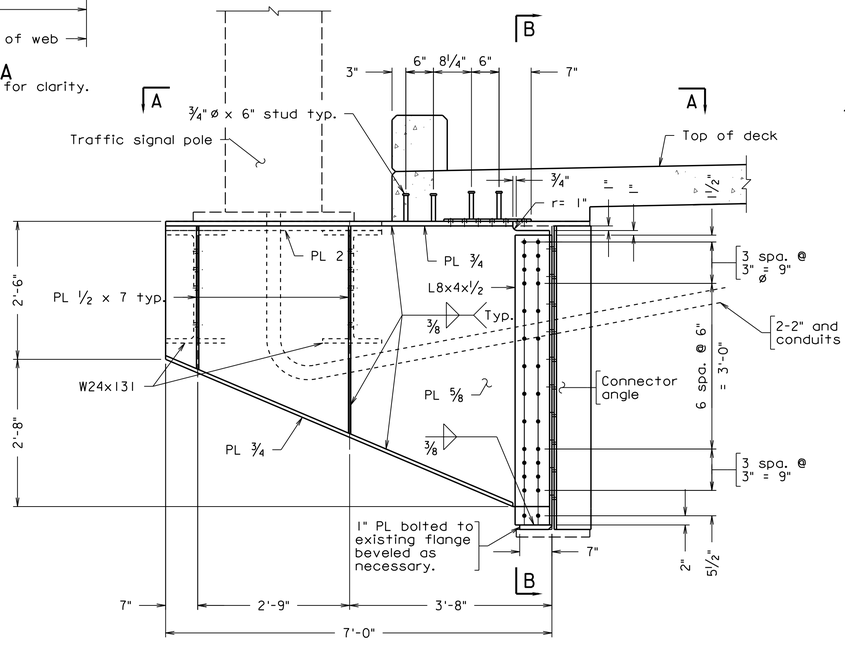

TRAFFIC SIGNAL SUPPORT NORTH

Fence not shown for clarity.

Scale: ¾" = 1'-0" unless otherwise noted.

© 2022, Commonwealth of Virginia

COMMONWEALTH OF VIRGINIA
JEREMY SCHLUSSEL
Lic. No. 033974
PROFESSIONAL ENGINEER

Jeremy Schlussel
2022.07.08 18:32:46 -04'00'

WHITMAN REQUARDT & ASSOCIATES
RICHMOND, VA
STRUCTURAL ENGINEER

No.	Description	Date
	Revisions	

COMMONWEALTH OF VIRGINIA
DEPARTMENT OF TRANSPORTATION

STRUCTURE AND BRIDGE DIVISION

TRAFFIC SIGNAL SUPPORT NORTH

Designed: WRA
Drawn: WRA
Checked: WRA

Date	Plan No.	Sheet No.
July 2022	257-38A	59 of 125

257-38A_059.dgn

STATE	FEDERAL AID		STATE		SHEET NO.
	ROUTE	PROJECT	ROUTE	PROJECT	
VA.	—		95	0095-076-299, B688	60

Notes:

For traffic signal support location, see sheet 39.

Factored loads used for design:
Axial: 9 kips
Shear: 7 kips
Moment: 164 k-ft
Torsion: 170 k-ft

All bolts on this sheet are ⅞" ø unless otherwise noted and use standard size holes.

For traffic signal conduit system, see sheet 91.

All proposed structural steel on this sheet shall be fabricated, tested and inspected in accordance with fracture critical requirements and in accordance with Clause 12 of the AWS-D1.5 Bridge Welding Code.

All flanges and webs are considered tension members.

Complete joint penetration welds shall be inspected by UT in accordance with AWS D1.5 and VTM 30.

Spacing of stud shear connectors at connections shall be adjusted to clear edges of splice plates and locations of bolts allowing for proper clearance to meet bolt tightening requirements. Stud shear connectors shall have a minimum edge distance of 1½". The adjusted spacing shall be shown on the shop drawings.

W24x131 as well as 2" support plate shall be hot-dipped galavnized in accordance with the specifications.

Signal pole support shall be installed level. Contractor may elect to field drill holes in W24x131 to ensure that light pole support plate will be level in its final configuration.

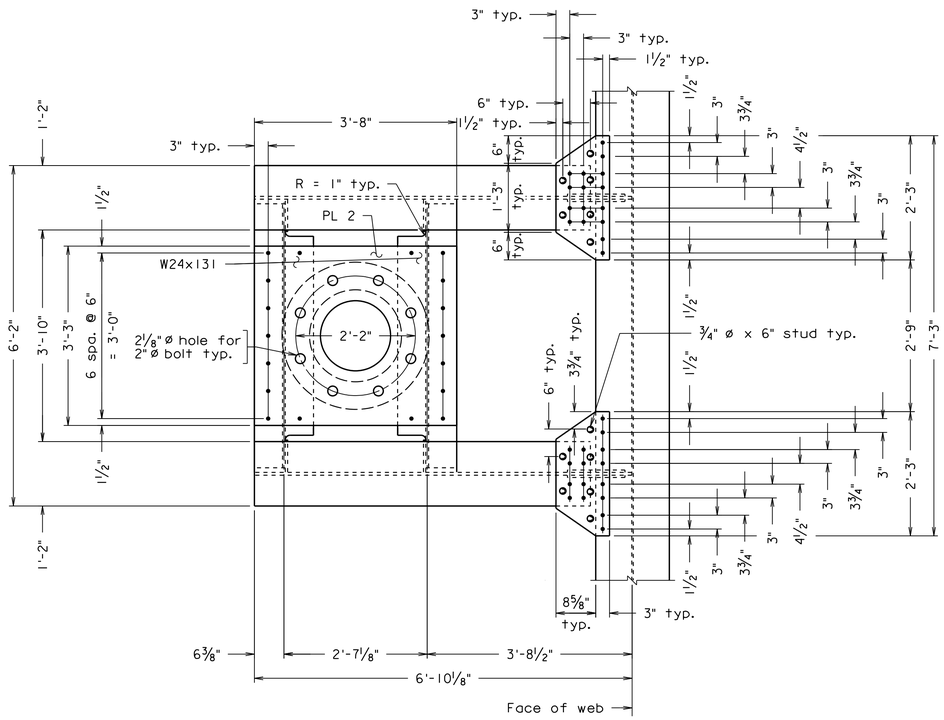

TOP - VIEW A-A
Deck and parapet not shown for clarity.

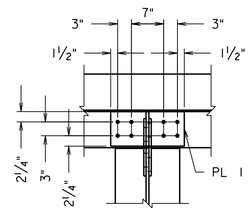

SECTION D-D

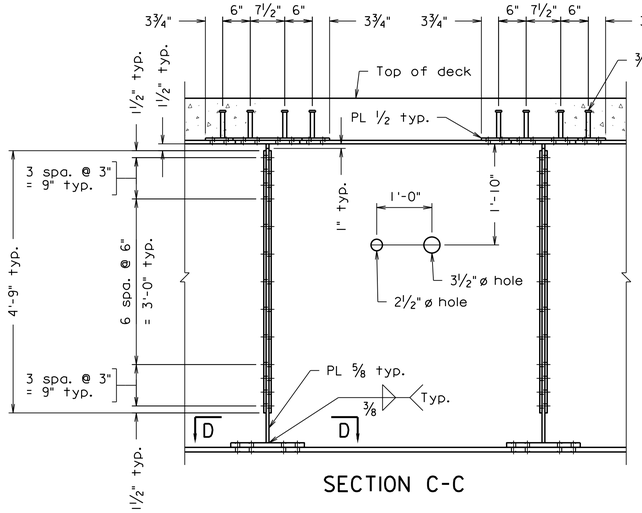

SECTION C-C

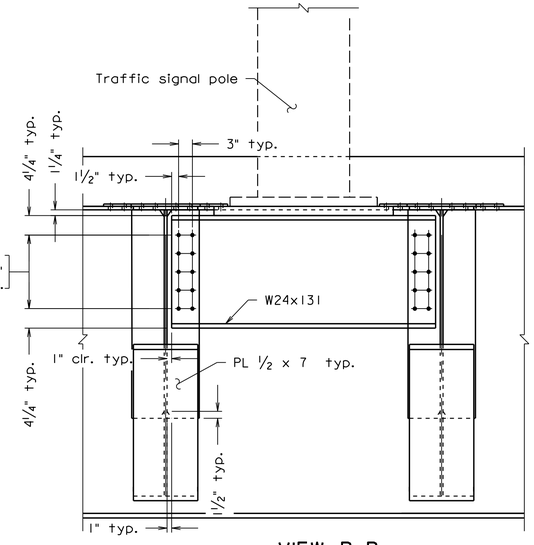

VIEW B-B
Connections to girder not show for clarity.

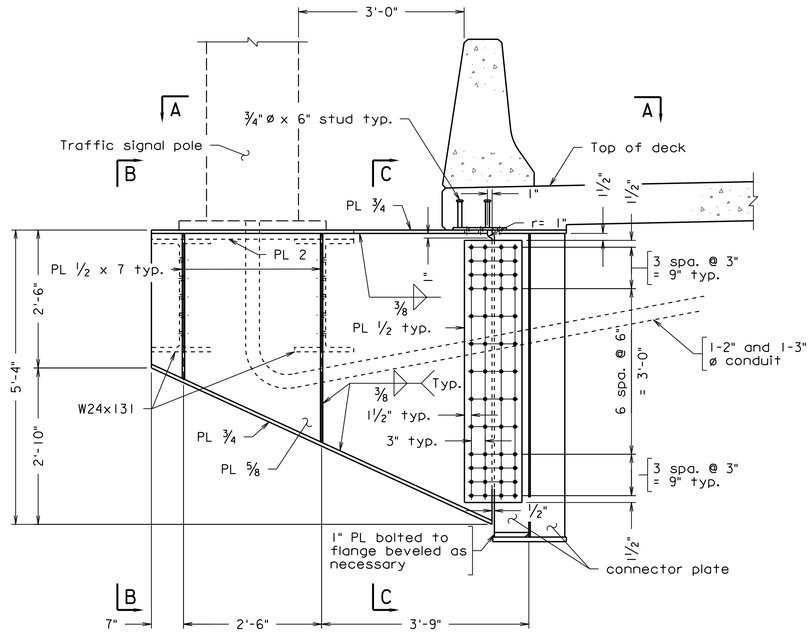

TRAFFIC SIGNAL SUPPORT SOUTH

257-38A_060.dgn

JEREMY SCHLUSSEL
Lic. No. 033974
COMMONWEALTH OF VIRGINIA
PROFESSIONAL ENGINEER

Jeremy Schlussel
2022.07.08 18:34:05 -04'00'

WHITMAN REQUARDT & ASSOCIATES
RICHMOND, VA
STRUCTURAL ENGINEER

Scale: ¾" = 1'-0"

© 2022, Commonwealth of Virginia

No.	Description	Date
	Revisions	

COMMONWEALTH OF VIRGINIA
DEPARTMENT OF TRANSPORTATION

STRUCTURE AND BRIDGE DIVISION

TRAFFIC SIGNAL SUPPORT SOUTH

Designed: WRA	Date	Plan No.	Sheet No.
Drawn: WRA	July 2022	257-38A	60 of 125
Checked: WRA			

STATE	FEDERAL AID		STATE		SHEET NO.
	ROUTE	PROJECT	ROUTE	PROJECT	
VA.	—		95	0095-076-299, B688	61

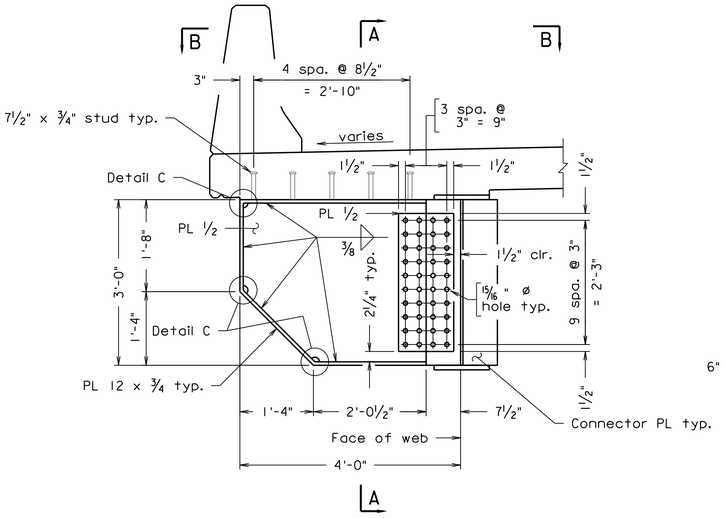

DECK OVERHANG SUPPORT AT GIRDER U

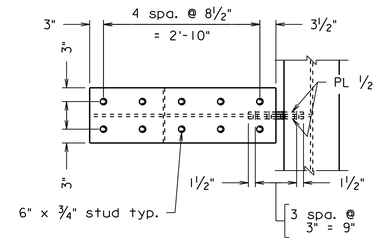

Deck not shown for clarity

TOP - VIEW B-B

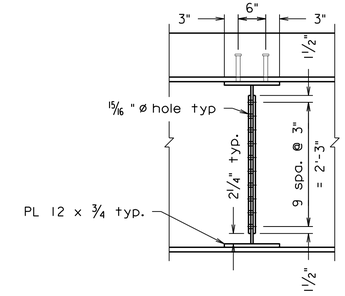

SECTION A-A

Notes:

For deck overhange support locations, see sheet 39.

Webs, flanges and connection plates shall be fabricated, tested and inspected in accordance with fracture critical requirements and in accordance with Clause 12 of the AWS-D1.5 Bridge Welding Code.

All flanges and webs are considered tension members.

Complete joint penetration welds shall be inspected by UT in accordance with AWS D1.5 and VTM 30.

Spacing of stud shear connectors at connections shall be adjusted to clear edges of splice plates and locations of bolts allowing for proper clearance to meet bolt tightening requirements. Stud shear connectors shall have a minimum edge distance of 1½". The adjusted spacing shall be shown on the shop drawings.

For Detail C, see sheet 55.

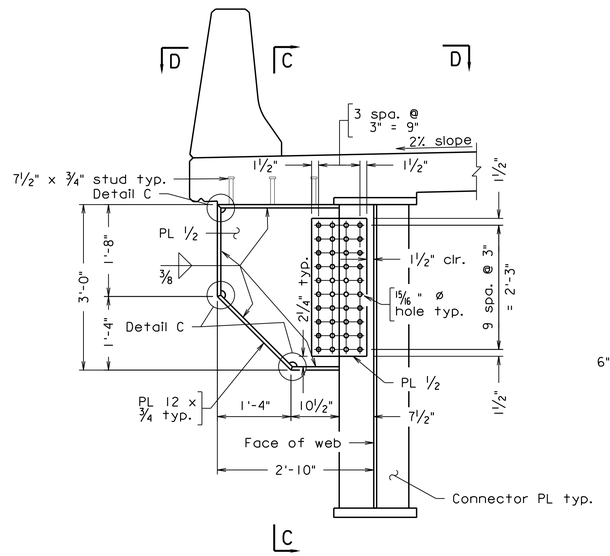

DECK OVERHANG SUPPORT AT GIRDER N

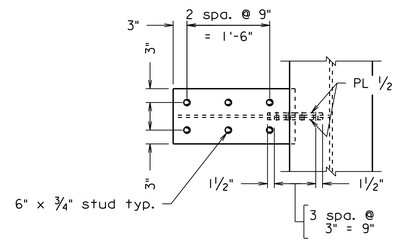

Deck not shown for clarity

TOP - VIEW D-D

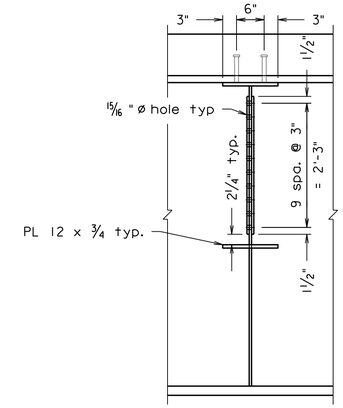

SECTION C-C

257-38A_061.dgn

JEREMY SCHLUSSEL
Lic. No. 033974
COMMONWEALTH OF VIRGINIA
PROFESSIONAL ENGINEER

Jeremy Schlussel
2022.07.08 18:34:28 -04'00'

WHITMAN REQUARDT & ASSOCIATES
RICHMOND, VA
STRUCTURAL ENGINEER

Scale: ¾" = 1'-0" unless otherwise noted.

© 2022, Commonwealth of Virginia

No.	Description	Date
	Revisions	

COMMONWEALTH OF VIRGINIA
DEPARTMENT OF TRANSPORTATION

STRUCTURE AND BRIDGE DIVISION

DECK OVERHANG SUPPORT DETAILS

Designed: WRA	Date	Plan No.	Sheet No.
Drawn: WRA	July 2022	257-38A	61 of 125
Checked: WRA			

STATE	FEDERAL AID		STATE		SHEET NO.
	ROUTE	PROJECT	ROUTE	PROJECT	
VA.	—		95	0095-076-299, B688	61a

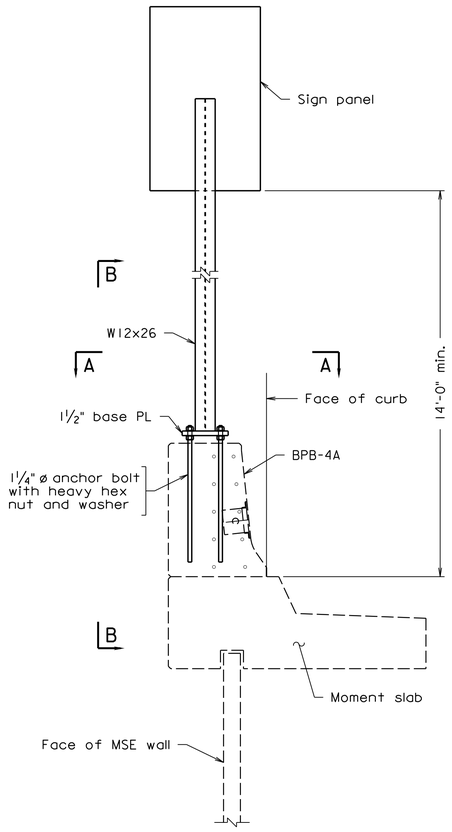

TYPICAL SIGN SUPPORT ON MSE WALL

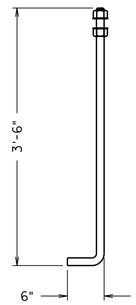

LIGHT POLE ANCHOR BOLT DETAIL

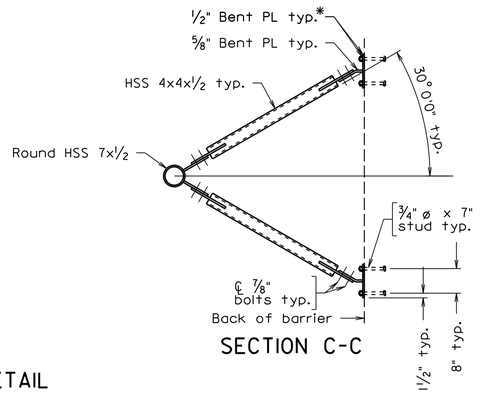

SECTION C-C

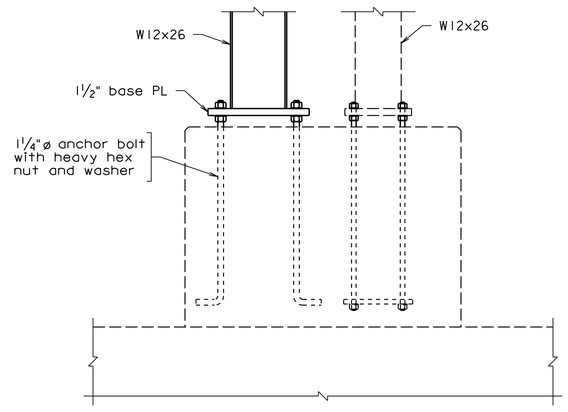

VIEW B-B
Scale: ¾" = 1'-0"

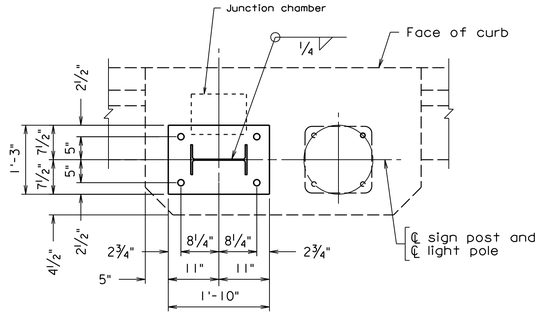

SECTION A-A
Scale: ¾" = 1'-0"

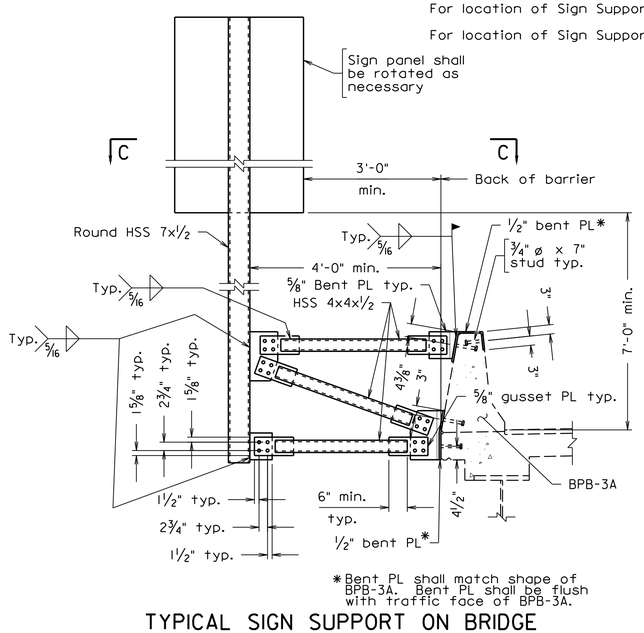

*Bent PL shall match shape of BPB-3A. Bent PL shall be flush with traffic face of BPB-3A.

TYPICAL SIGN SUPPORT ON BRIDGE

Notes:

For sign and sign connection details see roadway plans.

Sign support structure at MSE moment slab is for a maximum sign of 3'-0" wide by 6'-3" tall.

All structural steel for plates and rolled members shall be ASTM A709, Grade 50 and hot dipped galvanized in accordance with ASTM A123.

All structural steel for HSS and round HSS members shall be ASTM A500 Grade A and hot dipped galvanized in accordance with ASTM A123.

Studs shall be provided in accordance with VDOT's Materials Approved Lists.

All anchor bolts, nuts and washers shall be hot dipped galvanized.

Anchor bolt specifications:

Nuts (Top): ASTM F467 Alloy 6262-T9 or 6061-T6.
(Bottom): ASTM A563.
Thread series for all nuts to be UNC-2B.
Washers: (Top): ASTM B209 Alloy Alclad 2024-T3 or T4, 2¼" o x 0.165".
(Bottom): ASTM F844.
Rods: ASTM A276, type 430 or 410 annealed, hot-finished. Threads on rods may be rolled or cut. 3½" at each end of rod shall be threaded. Each rod shall be supplied with 2 washers and 2 nuts.

In the designations noted above, top refers to hardware above the top of baseplate. Bottom referes to hardware below the baseplate including embedment in concrete.

For parapet blister details, see sheet 94.

Sign structure supports shall be incidental to pay item Structural Steel Plate Girder.

For location of Sign Support on Bridge, see sheet 69.

For location of Sign Support on MSE Wall, see sheet 122.

257-38A_061a.dgn

COMMONWEALTH OF VIRGINIA
JEREMY SCHLUSSEL
Lic. No. 033974
PROFESSIONAL ENGINEER

Jeremy Schlussel
2022.07.08 18:32:25 -04'00'

WHITMAN REQUARDT & ASSOCIATES
RICHMOND, VA
STRUCTURAL ENGINEER

Scale: ¾" = 1'-0", unless otherwise noted.

© 2022. Commonwealth of Virginia

No.	Description	Date
	Revisions	

COMMONWEALTH OF VIRGINIA
DEPARTMENT OF TRANSPORTATION

STRUCTURE AND BRIDGE DIVISION

SIGN STRUCTURE SUPPORT DETAILS

Designed: MRD	Date	Plan No.	Sheet No.
Drawn: MRD	July 2022	257-38A	61a of 125
Checked: WRA			

STATE	FEDERAL AID		STATE		SHEET NO.
	ROUTE	PROJECT	ROUTE	PROJECT	
VA.	—		95	0095-076-299, B688	62

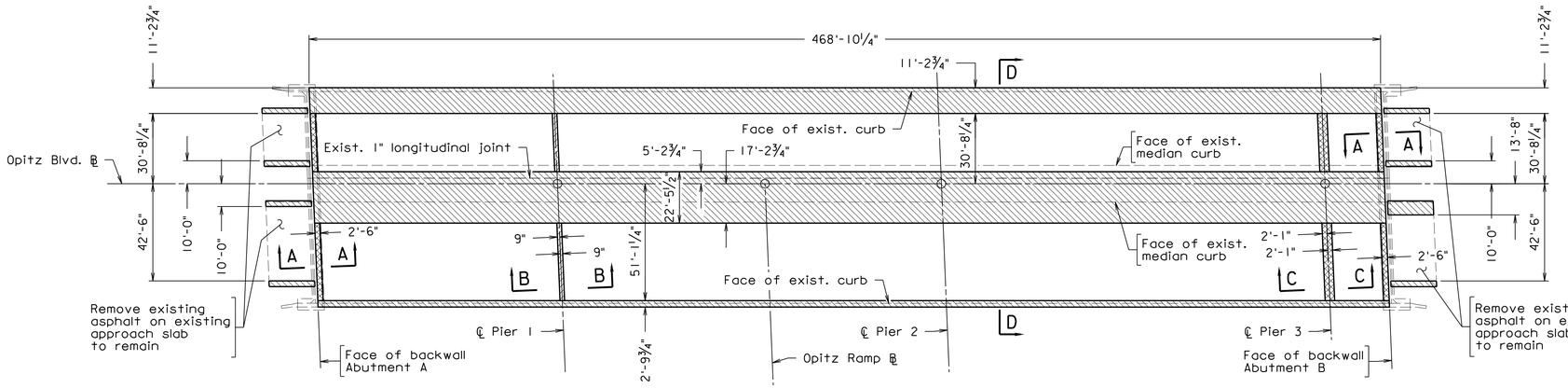

DECK SLAB REMOVAL PLAN

Notes:

Existing reinforcing steel that is to remain shall be cleaned and repaired in accordance with Section 412.03 of the specifications.

Contractor shall take care not to damage portion of existing structure to remain in service.

Saw cutting where designated will not be paid for as a separate pay item but shall be included in the cost of other appropriate pay items.

Longitudinal (parallel to the bridge baseline) cuts shall not be made in existing deck panels. Only transverse cuts will be allowed and transverse cuts and removal shall be the full width of the panel.

Limits of deck removal may be shifted with approval of the Engineer when removal is near a transverse joint of a prestressed panel. Contractor shall have demolition inspected by the Engineer in Stage 1 prior to reconstruction to verify if limits need to be adjusted.

For details of deck slab closure, see sheet 68.

Indicates limits of removal of existing deck and approach slab.

Indicates limits of joint reconstruction HES.

Indicates limits of deck slab closure HES.

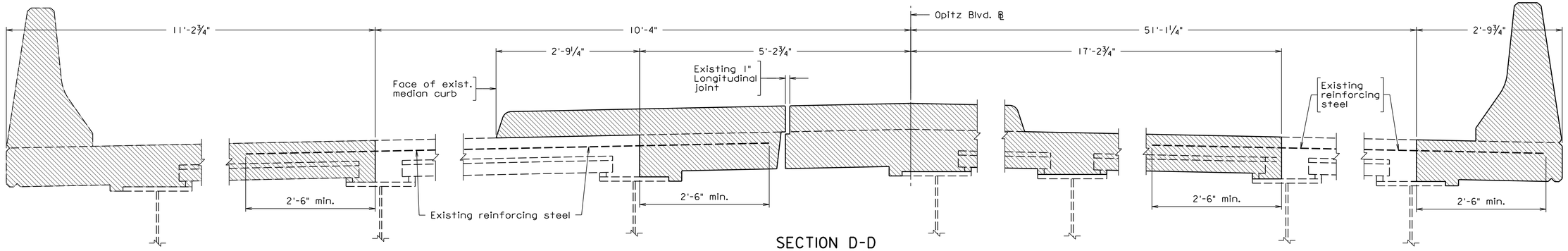

SECTION D-D

Scale: 1" = 1'-0"

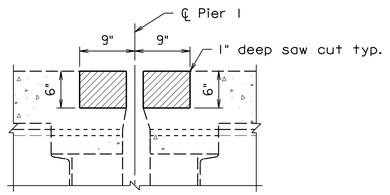

SECTION B-B

Showing partial depth removal of existing deck at expansion joint reconstruction HES.

Scale: 1" = 1'-0"

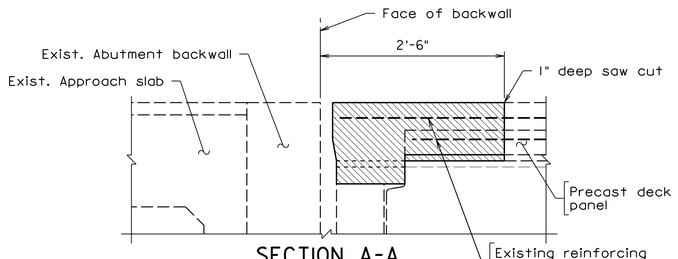

SECTION A-A

Showing full depth removal of existing deck at deck slab closure HES.

Scale: 1" = 1'-0"

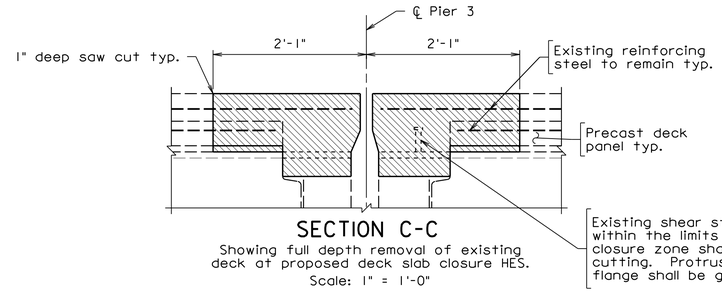

SECTION C-C

Showing full depth removal of existing deck at proposed deck slab closure HES.

Scale: 1" = 1'-0"

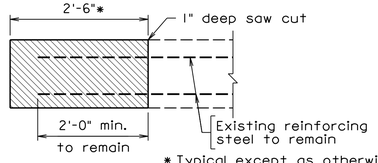

* Typical except as otherwise noted at abutment B.

APPROACH SLAB REMOVAL DETAIL

Scale: ¾" = 1'-0"

Scale: 1" = 30' unless otherwise noted.

© 2022, Commonwealth of Virginia

COMMONWEALTH OF VIRGINIA
JEREMY SCHLUSSEL
Lic. No. 033974
PROFESSIONAL ENGINEER

Jeremy Schlussel
2022.07.08 18:32:03 -04'00'

WHITMAN REQUARDT & ASSOCIATES
RICHMOND, VA
STRUCTURAL ENGINEER

No.	Description	Date
	Revisions	

COMMONWEALTH OF VIRGINIA
DEPARTMENT OF TRANSPORTATION

STRUCTURE AND BRIDGE DIVISION

DECK SLAB AND APPROACH SLAB LIMITS OF REMOVAL

Designed: MRD	Date	Plan No.	Sheet No.
Drawn: MRD	July 2022	257-38A	62 of 125
Checked: BTS			

257-38A_062.dgn

STATE	FEDERAL AID		STATE		SHEET NO.
	ROUTE	PROJECT	ROUTE	PROJECT	
VA.	—		95	0095-076-299, B688	63

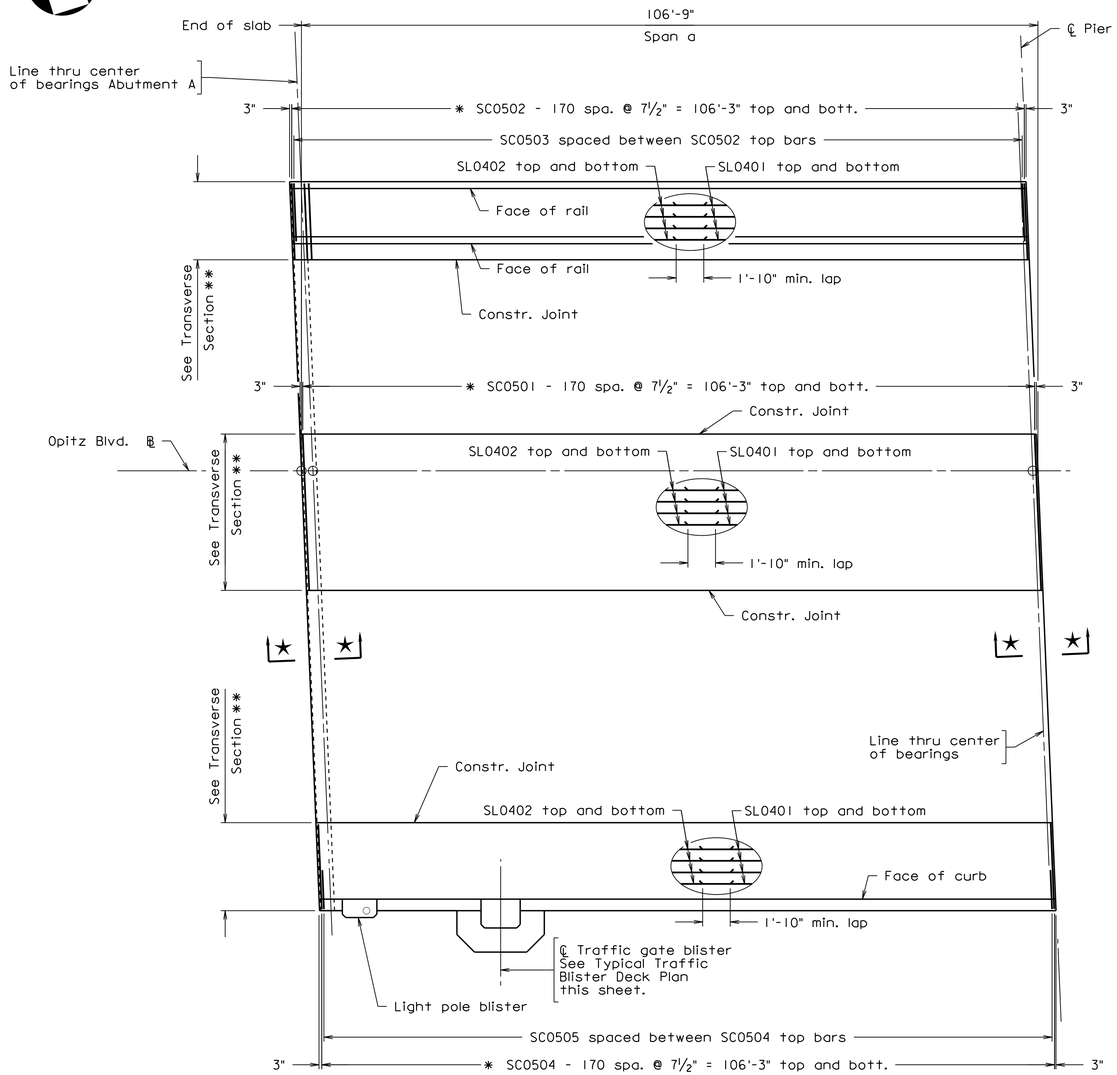

DECK PLAN - SPAN a

Raised median and overlay not shown for clarity.

★ For typical Deck Slab End Details, see sheets 66 thru 68.

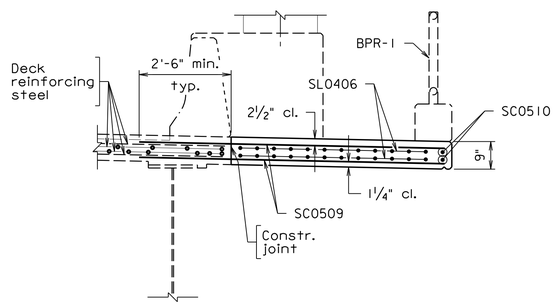

SECTION A-A

Scale: ½" = 1'-0"

Notes:

* Spacing of SC0501, SC0502 and SC0504 bars shall match existing deck transverse reinforcing bars where lapping with deck reinforcing to remain. Spacing shall not exceed 8". Contractor shall notify the Engineer if any discrepancies are found.

** See Transverse Section for spacing of SL04 Series bars. SL05 Series bars shall be spaced between SL04 Series bars.

The ½" expanded rubber joint filler shall extend the full length of the deck slab extension at Abutment C. The cost of the ½" expanded rubber joint filler shall be included in the bid price for concrete low shrinkage Class A4 modified.

Forms for the deck slab ends shall be attached to the girders only; the forms shall not be attached to or locked against any part of the abutment or ground. The deck ends and forms must be free to move relative to the abutment.

Mechanical couplers shall be used for installation of deck extension, joint reconstruction and joint removal at construction joints.

For Transverse Sections see sheets 36 and 37.

For parapet details, see sheets 77 thru 86.

For details of light pole anchorage, see sheets 94 and 95.

For details of traffic gate anchorage, see sheet 97.

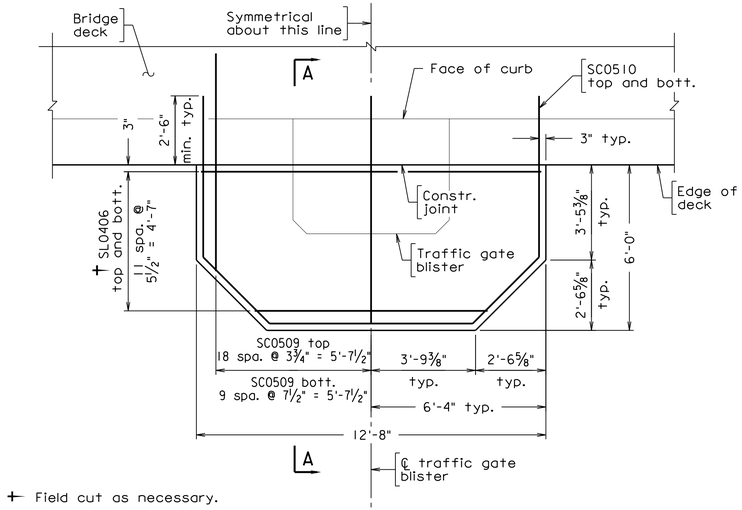

† Field cut as necessary.

TYPICAL TRAFFIC BLISTER DECK PLAN

Scale: ⅜" = 1'-0"

257-38A_063.dgn

JEREMY SCHLUSSEL
Lic. No. 033974
COMMONWEALTH OF VIRGINIA
PROFESSIONAL ENGINEER

Jeremy Schlussel
2022.07.08 18:30:01 -04'00'

WHITMAN REQUARDT & ASSOCIATES
RICHMOND, VA
STRUCTURAL ENGINEER

Scale: 3/32 " = 1'-0"

© 2022. Commonwealth of Virginia

No.	Description	Date
	Revisions	

COMMONWEALTH OF VIRGINIA
DEPARTMENT OF TRANSPORTATION

STRUCTURE AND BRIDGE DIVISION

DECK PLAN
SPAN a

Designed: MRD	Date	Plan No.	Sheet No.
Drawn: MRD	July 2022	257-38A	63 of 125
Checked: GTS			

STATE	FEDERAL AID		STATE		SHEET NO.
	ROUTE	PROJECT	ROUTE	PROJECT	
VA.	—		95	0095-076-299, B688	64

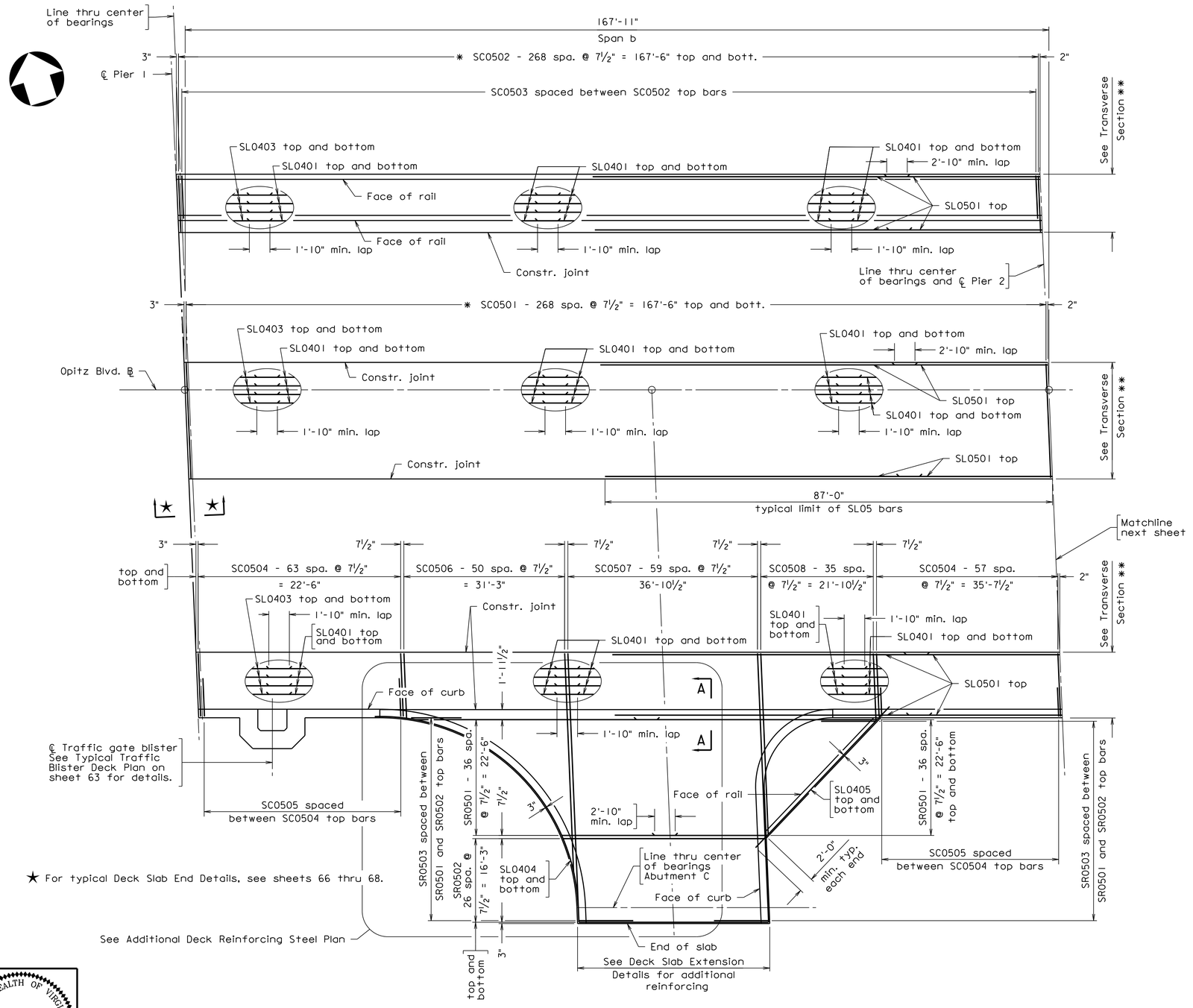

DECK PLAN SPAN b and e

Raised median and overlay not shown for clarity.

Notes:

✱ Spacing of SC0501, SC0502 and SC0504 bars shall match existing deck transverse reinforcing bars where lapping with deck reinforcing to remain. Spacing shall not exceed 8". Contractor shall notify the Engineer if any discrepancies are found.

✱✱ See Transverse Section for spacing of SL04 Series bars. Two SL05 Series bars shall be equally spaced between each top SL04 Series bar.

Reinforcing steel cover shall be maintained at transition in deck reinforcing from Span b to Span c. Field bending may be required at transition, see Section A-A.

For Transverse Sections see sheets 36 and 37.

For additional notes, see sheet 63.

For Deck Slab Extension Details see sheet 67.

For layout of raised median and median barrier on the deck, see sheet 69.

For parapet details, see sheets 76 thru 86.

For details of traffic gate blister, see sheet 97.

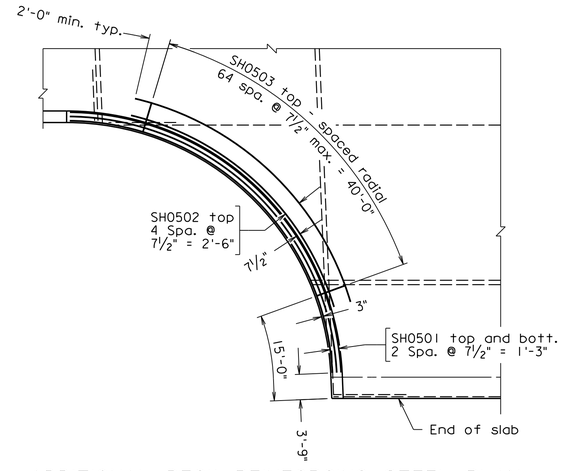

ADDITIONAL DECK REINFORCING STEEL PLAN

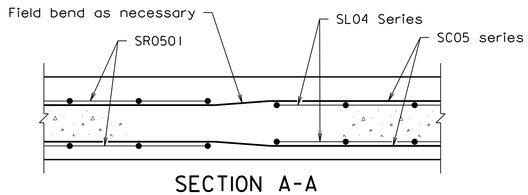

SECTION A-A

Scale: 1½" = 1'-0"

257-38A_064.dgn

COMMONWEALTH OF VIRGINIA
JEREMY SCHLUSSEL
Lic. No. 033974
PROFESSIONAL ENGINEER

Jeremy Schlussel
2022.07.08 18:31:19 -04'00'

WHITMAN REQUARDT & ASSOCIATES
RICHMOND, VA
STRUCTURAL ENGINEER

Scale: 3/32" = 1'-0" unless otherwise noted.

© 2022, Commonwealth of Virginia

No.	Description	Date
	Revisions	

COMMONWEALTH OF VIRGINIA
DEPARTMENT OF TRANSPORTATION

STRUCTURE AND BRIDGE DIVISION

DECK PLAN SPAN b AND e

Designed: MRD	Date	Plan No.	Sheet No.
Drawn: MRD			
Checked: GTS	July 2022	257-38A	64 of 125

STATE	FEDERAL AID		STATE		SHEET NO.
	ROUTE	PROJECT	ROUTE	PROJECT	
VA.	—		95	0095-076-299, B688	65

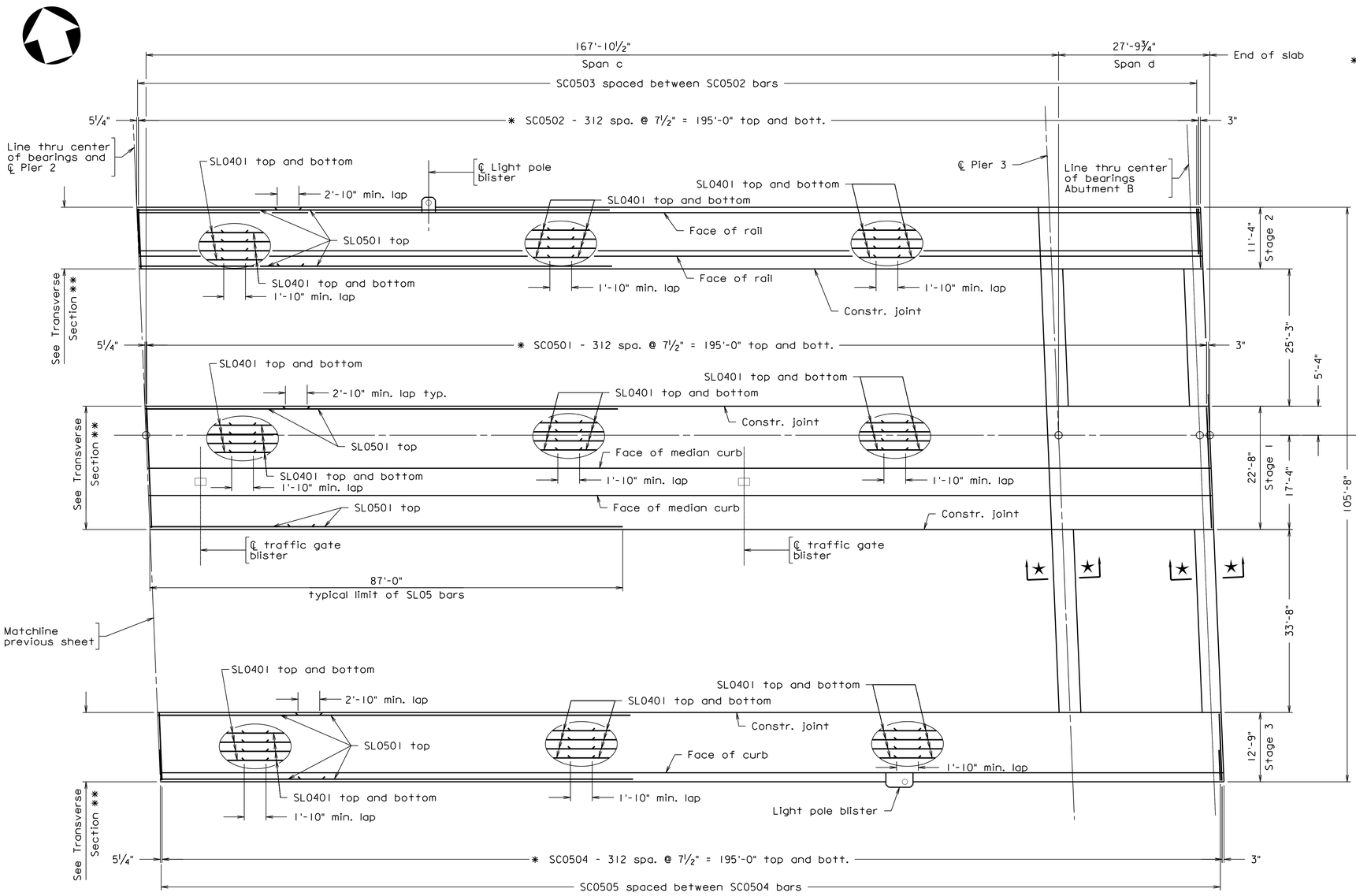

★ For typical Deck Slab End Details, see sheets 66 thru 68.

DECK PLAN SPAN c AND d

Raised median and overlay not shown for clarity.

Notes:

* Spacing of SC0501, SC0502 and SC0504 bars shall match existing deck transverse reinforcing bars where lapping with deck reinforcing to remain. Spacing shall not exceed 8" unless otherwise noted. See sheet 68 for spacing at Pier 3 deck continuity. Contractor shall notify the Engineer if any discrepancies are found.

** See Transverse Section for spacing of SL04 Series bars. Two SL05 Series bars shall be equally spaced between each top SL04 Series bar.

For additional notes, see sheet 63.

For Transverse Sections see sheets 36 and 37.

For Deck Slab Extension Details see sheet 66.

For layout of median barrier on the deck, see sheets 69.

For parapet details, see sheets 76 thru 86.

For details of light pole blister, see sheets 94 and 95.

For details of traffic gate blister, see sheet 97.

COMMONWEALTH OF VIRGINIA
JEREMY SCHLUSSEL
Lic. No. 033974
PROFESSIONAL ENGINEER

Jeremy Schlussel
2022.07.08 18:31:38 -04'00'

WHITMAN REQUARDT & ASSOCIATES
RICHMOND, VA
STRUCTURAL ENGINEER

257-38A_065.dgn

Scale: 3/32" = 1'-0" unless otherwise noted.

© 2022, Commonwealth of Virginia

No.	Description	Date
	Revisions	

COMMONWEALTH OF VIRGINIA
DEPARTMENT OF TRANSPORTATION

STRUCTURE AND BRIDGE DIVISION

DECK PLAN
SPANS c AND d

Designed: MRD	Date	Plan No.	Sheet No.
Drawn: MRD	July 2022	257-38A	65 of 125
Checked: DTS			

STATE	FEDERAL AID		STATE		SHEET NO.
	ROUTE	PROJECT	ROUTE	PROJECT	
VA.	—		95	0095-076-299, B688	66

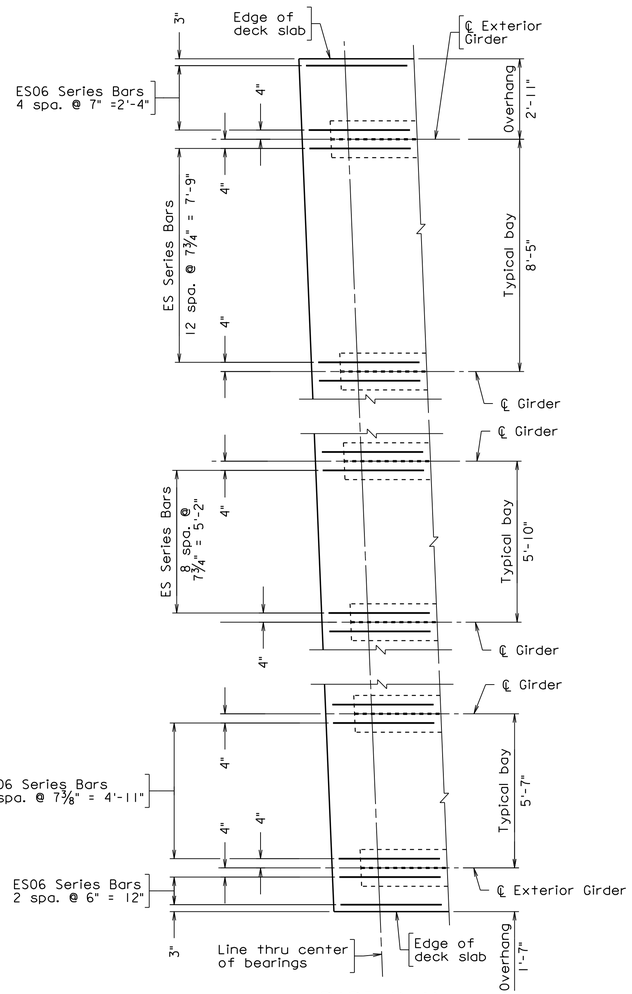

PART PLAN

Abutment A shown, B similar opposite hand

Showing ES06 series bar spacing only

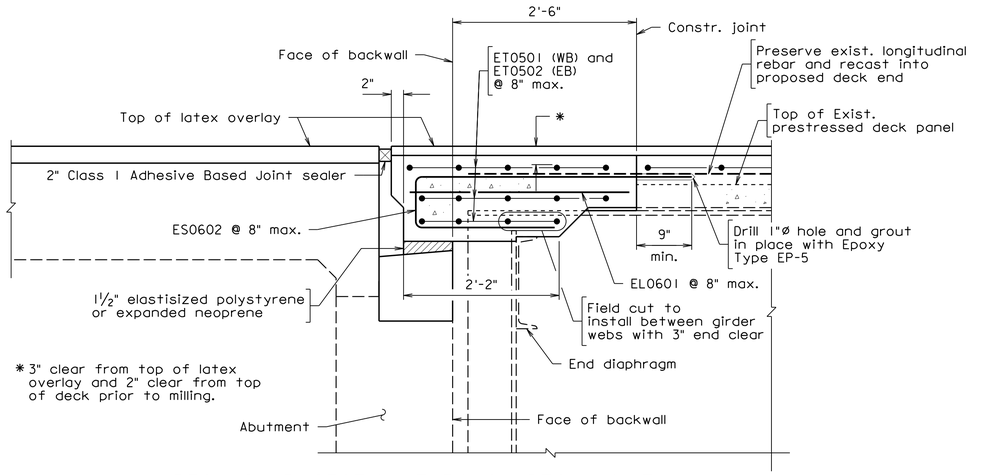

DECK SLAB SECTION THROUGH DECK JOINT IN EXISTING DECK AT ABUTMENT A AND B

Scale: 1" = 1'-0"

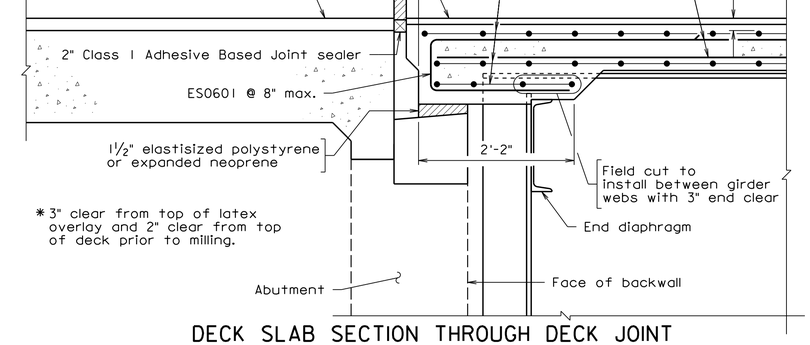

DECK SLAB SECTION THROUGH DECK JOINT IN NEW DECK AT ABUTMENT A AND B

Scale: 1" = 1'-0"

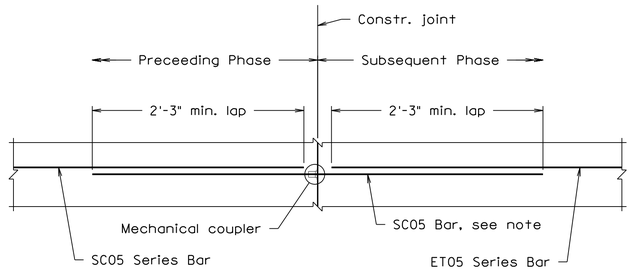

MECHANICAL SPLICE DETAIL

Not to scale

Note:

SC05 Series reinforcing shall be installed with SC05 coupler bar with mechanical coupler at face of pour. When Deck Slab Closure and Joint Reconstruction are installed the coupler shall be attached and lapped with ET05 Series bars.

Contractor shall install couplers or SC05 coupler bars for ET05 Series at any construction joint necessary for their means and methods to perform Deck Slab Closure or Joint Reconstruction.

The number of SC05 coupler bars shall be determined by Contractor and is not included in reinforcing steel schedule.

For deck slab plan, see sheets 63 thru 65.

For details of the Class I adhesive based joint sealer, see sheet 74.

257-38A_066.dgn

COMMONWEALTH OF VIRGINIA
JEREMY SCHLUSSEL
Lic. No. 033974
PROFESSIONAL ENGINEER

Jeremy Schlussel
2022.07.08 18:36:24 -04'00'

WHITMAN REQUARDT & ASSOCIATES
RICHMOND, VA
STRUCTURAL ENGINEER

Scale: ⅜" = 1'-0" unless otherwise noted.

© 2022, Commonwealth of Virginia

No.	Description	Date
Revisions		

COMMONWEALTH OF VIRGINIA
DEPARTMENT OF TRANSPORTATION

STRUCTURE AND BRIDGE DIVISION

DECK DETAILS
1 OF 3

Designed: MRD	Date	Plan No.	Sheet No.
Drawn: MRD	July 2022	257-38A	66 of 125
Checked: GTS			

STATE	FEDERAL AID		STATE		SHEET NO.
	ROUTE	PROJECT	ROUTE	PROJECT	
VA.	—		95	0095-076-299, B688	67

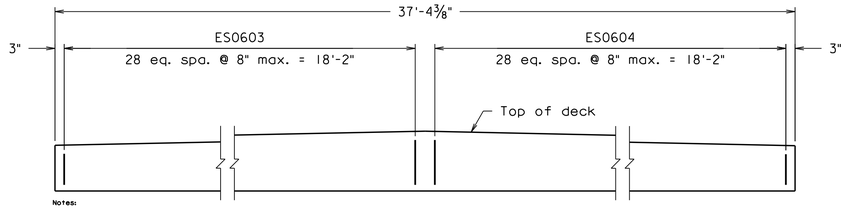

Notes:
A minimum of 4 ES06 bars shall be in each overhang.
Adjust ES06 bars to clear girder webs.

SLAB END ELEVATION

Scale: ½" = 1'-0"

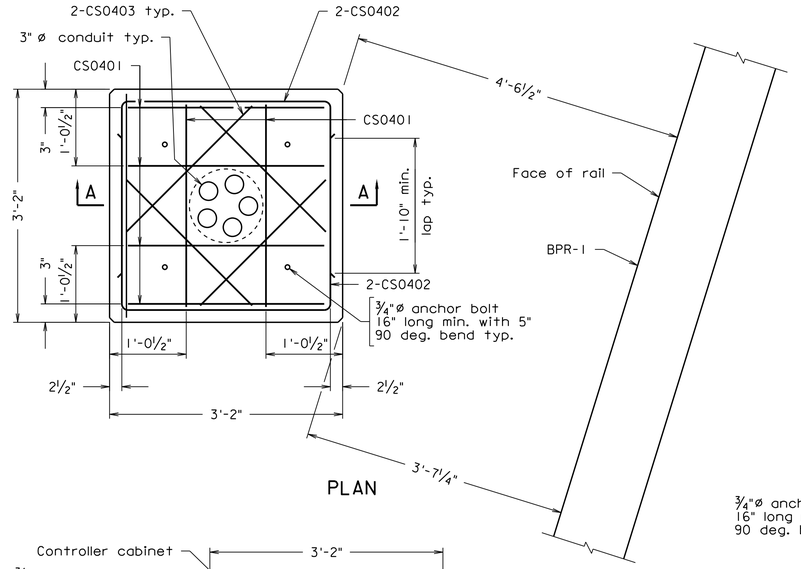

PLAN

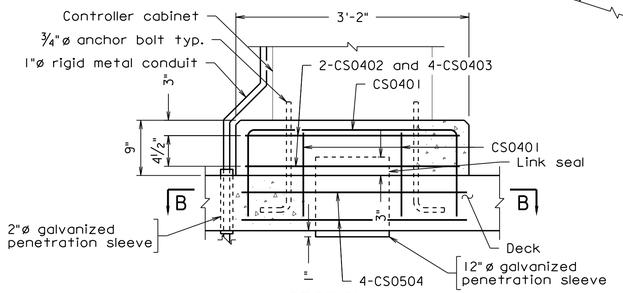

SECTION A-A

CABINET FOUNDATION PAD

Scale: 1" = 1'-0"

Notes:
Reinforcing steel shall be spaced around conduit.

Contractor may use mechanical couplers on vertical bars to faciliate deck installation.

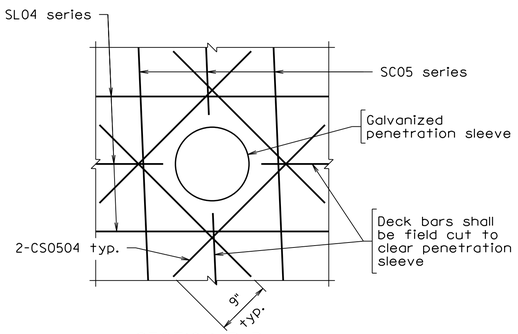

SECTION B-B

Note: Penetration sleeve shall be located such that only one deck transverse bar and one longitudinal bar are interrupted.

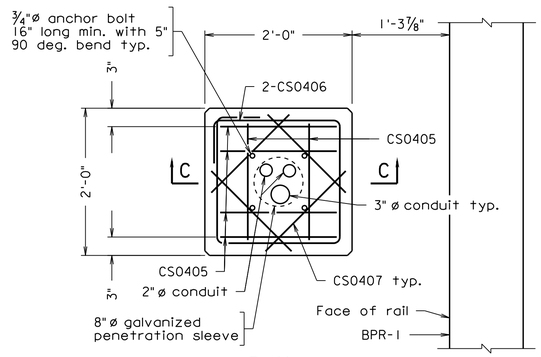

PLAN

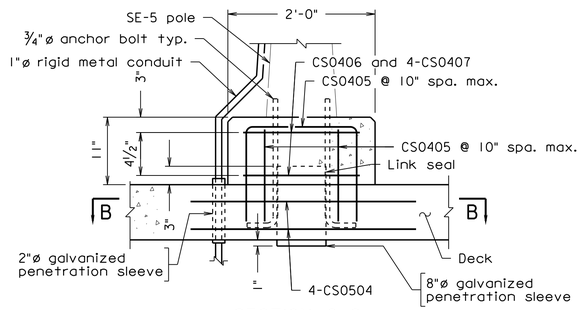

SECTION C-C

SE-5 ELECTRIC SERVICE FOUNDATION PAD

Scale: 1" = 1'-0"

Note: Reinforcing steel shall be spaced around conduit

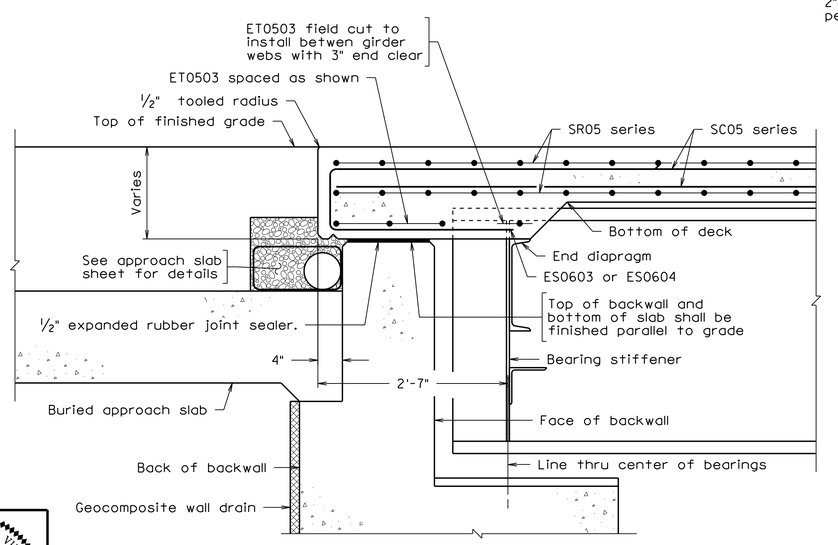

SLAB END DETAIL AT ABUTMENT C

Scale: 1" = 1'-0"

Notes:

ES0502 bars shall be generally spaced with SC0507 bars maintaining proper edge distance from face of web.

The ½" expanded rubber joint filler shall extend the full length of the deck slab extension at Abutment C. The cost of the ½" expanded rubber joint filler shall be included in the bid price for concrete low shrinkage Class A4 modified.

Spacing of anchor bolts shall be determined by controller cabinet manufacturer and SE-5 electric service manufacturer.

Reinforcing steel shall be adjusted as necessary for installation of anchor bolts. Anchor bolt pattern shall be installed centered on foundation.

Pipe penetration sleeves in controller cabinet foundation shall be arranged in a circular pattern and align with 12" diameter penetration sleeve in deck.

Penetration sleeves shall extend through stay-in-place forms.

Controller cabinet and SE-5 electric service foundations and incidental items including concrete, reinforcing steel, penetration sleeves and linkseas shall be incidental to Bridge Conduit System.

For deck slab plan see sheet 64.

For Transverse Sections see sheets 36 and 37.

Scale: ⅜" = 1'-0" unless otherwise noted.

© 2022, Commonwealth of Virginia

COMMONWEALTH OF VIRGINIA
JEREMY SCHLUSSEL
Lic. No. 033974
PROFESSIONAL ENGINEER

Jeremy Schlussel
2022.07.08 18:41:49 -04'00'

WHITMAN REQUARDT & ASSOCIATES
RICHMOND, VA
STRUCTURAL ENGINEER

No.	Description	Date
	Revisions	

COMMONWEALTH OF VIRGINIA
DEPARTMENT OF TRANSPORTATION

STRUCTURE AND BRIDGE DIVISION

DECK DETAILS 2 OF 3

Designed: MRD	Date	Plan No.	Sheet No.
Drawn: MRD	July 2022	257-38A	67 of 125
Checked: RLS			

257-38A_067.dgn

STATE	FEDERAL AID		STATE		SHEET NO.
	ROUTE	PROJECT	ROUTE	PROJECT	
VA.	—		95	0095-076-299, B688	68

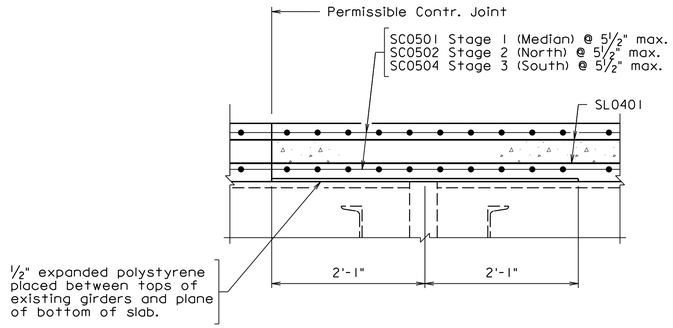

DECK SLAB SECTION THROUGH DECK
CONTINUITY IN NEW DECK OVER PIER 3

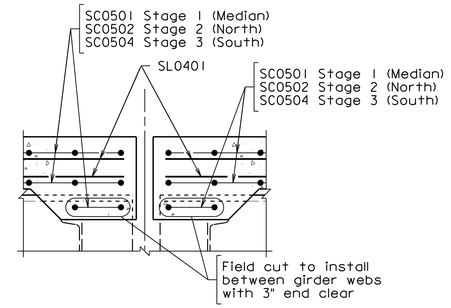

DECK SLAB SECTION THROUGH DECK
JOINT IN NEW DECK OVER PIER 1

Notes:

SE05 Series reinforcing shall be installed with SC05 coupler bar with mechanical coupler at face of pour. When Deck Slab Closure and Joint Reconstruction are installed the coupler shall be attached and lapped with SE05 Series bars.

Contractor shall install couplers or coupler bars for SE05 Series at any construction joint necessary for their means and methods to perform Deck Slab Closure or Joint Reconstruction.

For deck slab plan, see sheets 63 thru 65.

For elastomeric expansion dam details, see sheet 73.

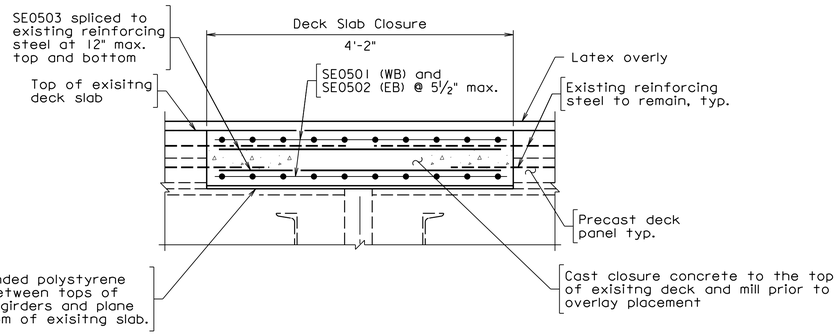

DECK SLAB SECTION THROUGH DECK
CONTINUITY IN EXISTING DECK OVER PIER 3

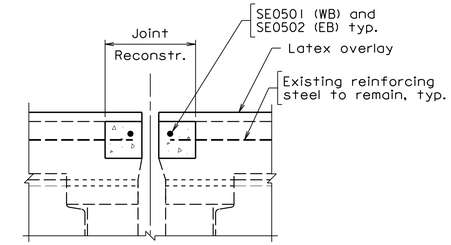

DECK SLAB SECTION THROUGH DECK
JOINT IN EXISTING DECK OVER PIER 1

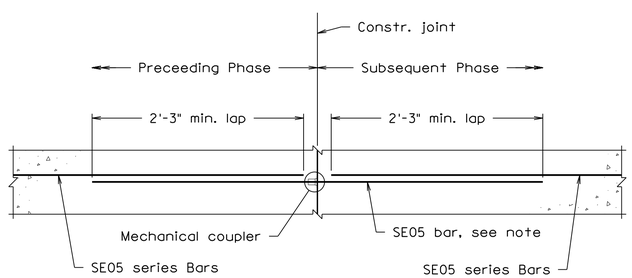

MECHANICAL SPLICE DETAIL
Not to scale

257-38A_068.dgn

COMMONWEALTH OF VIRGINIA
JEREMY SCHLUSSEL
Lic. No. 033974
PROFESSIONAL ENGINEER

Jeremy Schlussel
2022.07.08 18:42:09 -04'00'

WHITMAN REQUARDT & ASSOCIATES
RICHMOND, VA
STRUCTURAL ENGINEER

Scale: 1" = 1'-0" unless otherwise noted.

© 2022, Commonwealth of Virginia

No.	Description	Date
	Revisions	

COMMONWEALTH OF VIRGINIA
DEPARTMENT OF TRANSPORTATION

STRUCTURE AND BRIDGE DIVISION

DECK DETAILS
3 OF 3

Designed: MRD	Date	Plan No.	Sheet No.
Drawn: MRD	July 2022	257-38A	68 of 125
Checked: DTS			

STATE	FEDERAL AID		STATE		SHEET
	ROUTE	PROJECT	ROUTE	PROJECT	NO.
VA.	—		95	0095-076-299, B688	69

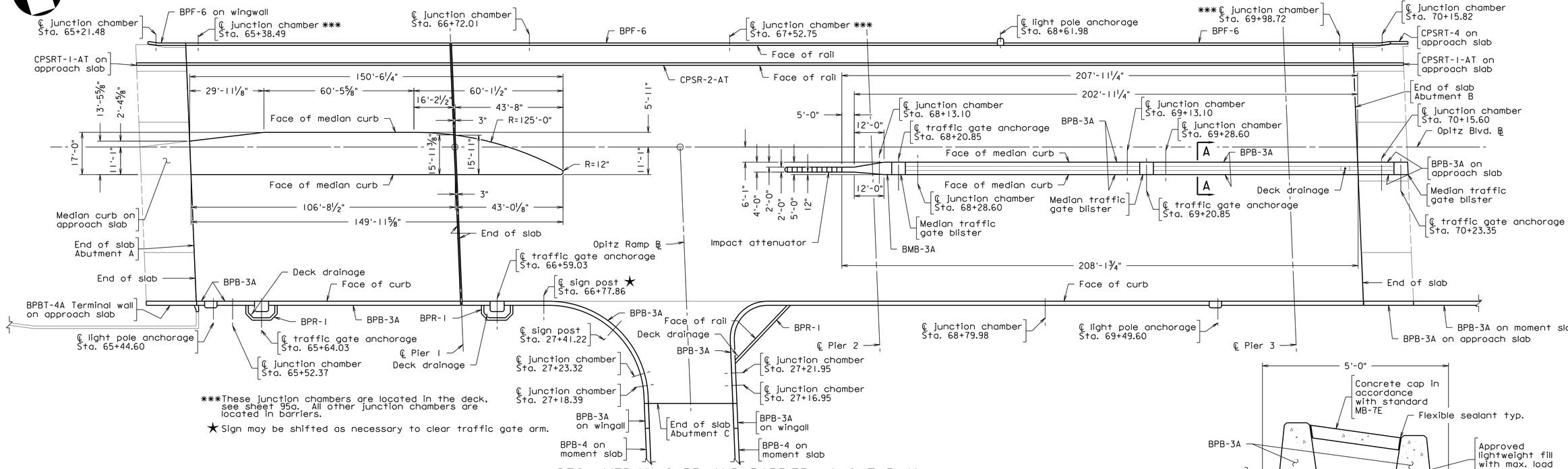

***These junction chambers are located in the deck, see sheet 95a. All other junction chambers are located in barriers.

★ Sign may be shifted as necessary to clear traffic gate arm.

DECK MEDIAN CURB AND BARRIER LAYOUT PLAN

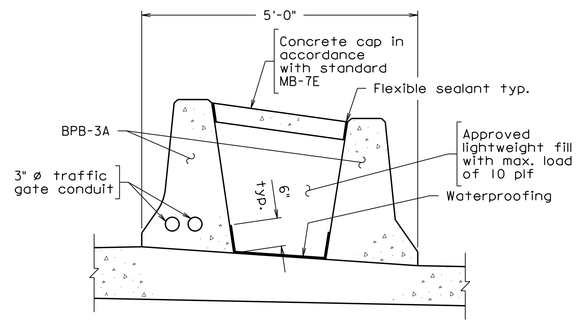

SECTION A-A

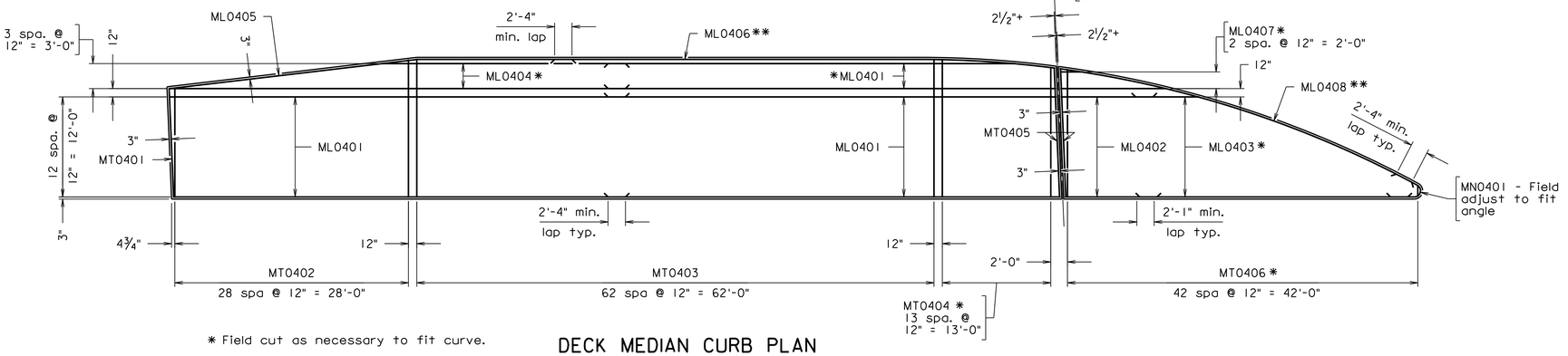

* Field cut as necessary to fit curve.

** Field bend as necessary to match curve

DECK MEDIAN CURB PLAN

Scale: ⅛" = 1'-0"

Notes:

Waterproofing shall be in accordance with Section 416 of the Specifications.

Waterproofing and concrete cap shall be incidental to other items.

Maximum relief for archietectural treatment on median curb shall be ¼".

Impact attentuator and flexible post delineators shall be installed per manufacturer's recommendations.

For deck drainage details see sheet 69a.

For median traffic gate blister details, see sheet 72 and for traffic gate blister details, see sheet 97

For BPF-6 details, see sheet 76.

For CPSR, CPSR-1-AT and CPSR-4 details, see sheets 77 thru 79a.

For BMB-3A median barrier details, see sheet 81.

For BPB-3A details, see sheet 82.

For BPBT-4A terminal wall details, see sheet 83

For BPR-1 details, see sheet 84.

For median curb on approach slab details, see sheet 111.

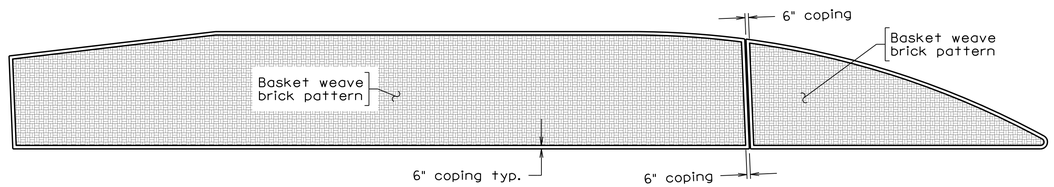

MEDIAN BRICK PATTERN PLAN

Scale: 3/32 " = 1'-0"

Scale: 1" = 20' unless otherwise noted.

© 2022, Commonwealth of Virginia

COMMONWEALTH OF VIRGINIA
JEREMY SCHLUSSEL
Lic. No. 033974
PROFESSIONAL ENGINEER

Jeremy Schlussel
2022.07.08 18:42:39 -04'00'

WHITMAN REQUARDT & ASSOCIATES
RICHMOND, VA
STRUCTURAL ENGINEER

No.	Description	Date
	Revisions	

COMMONWEALTH OF VIRGINIA
DEPARTMENT OF TRANSPORTATION

STRUCTURE AND BRIDGE DIVISION

DECK SLAB MEDIAN CURB AND BARRIER LAYOUT PLAN

Designed: MRD	Date	Plan No.	Sheet No.
Drawn: MRD	July 2022	257-38A	69 of 125
Checked: GTS			

257-38A_069.dgn

STATE	FEDERAL AID		STATE		SHEET NO.
	ROUTE	PROJECT	ROUTE	PROJECT	
VA.	—		95	0095-076-299, B688	69a

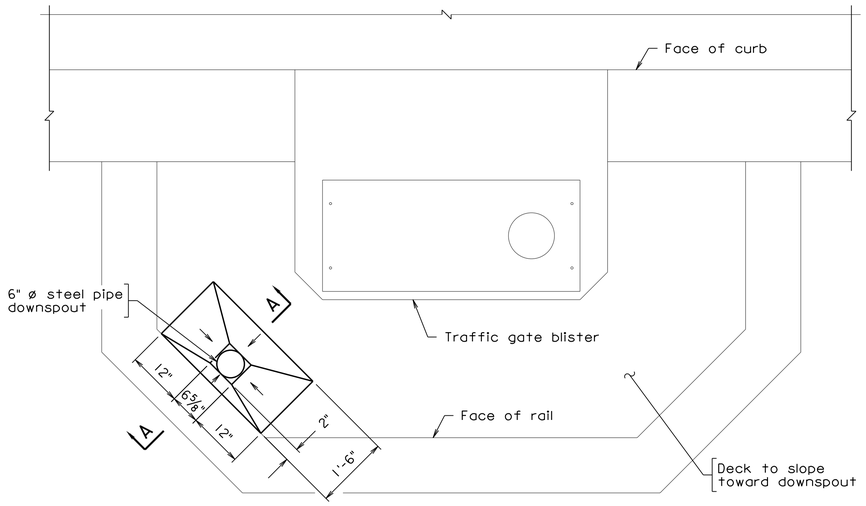

DECK DRAINAGE PLAN AT TRAFFIC GATE BLISTER

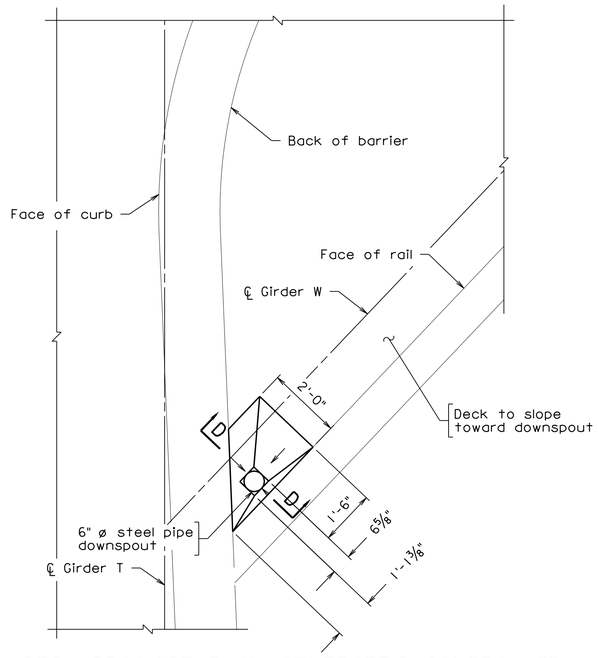

DECK DRAINAGE PLAN AT TRAFFIC CONTROLLER CABINET PLATFORM
Scale: ½" = 1'-0"

Notes:

* Cope steel pipe to allow for installation at interface of deck and barrier.

Steel pipe may be shifted to avoid barrier reinforcing steel.

Steel pipe downspouts shall be ASTM A53 Schedule 40 black seamless steel pipe.

Steel plates, bars and rods shall be ASTM A36. All bolts shall be ASTM A325.

Downspout pipe assemblies and attachments to include all steel plates, pipe, bars, bolts and nuts, and U-bolts shall be hot dipped galvanized after fabrication.

Attachment of galvanized elements to weathering steel members shall be accomplished by placing a neoprene or vinyl washer between the contact surfaces of the weathering steel and the galvanized element.

Cost for furnishing and installing all components of deck drainage system shall be incidental to pay item Structural Steel Plate Girders.

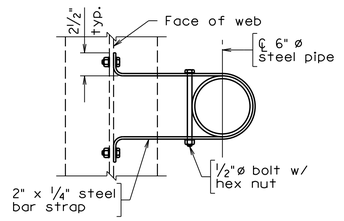

SECTION C-C
Scale: 1½" = 1'-0"

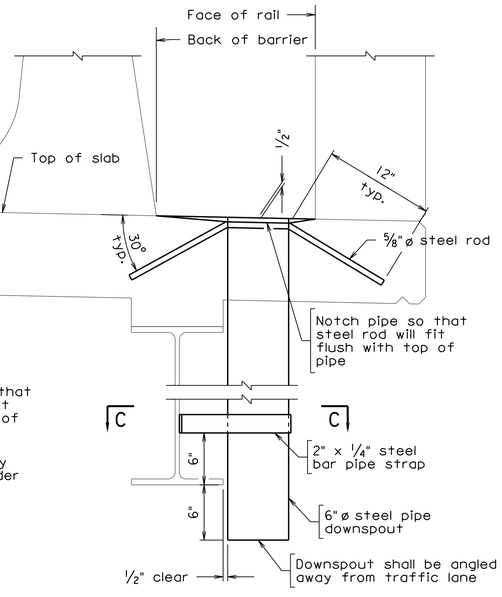

SECTION D-D
Scale: 1½" = 1'-0"

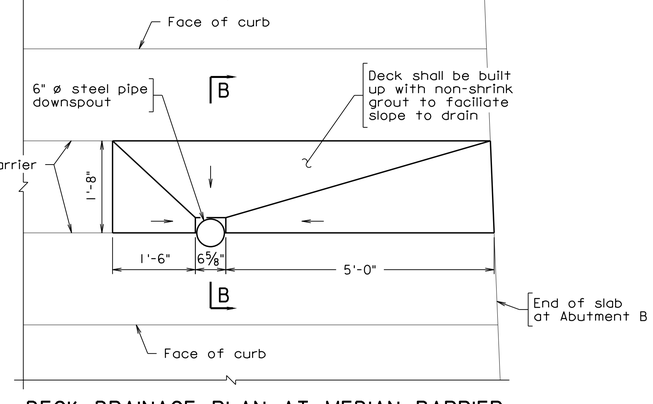

DECK DRAINAGE PLAN AT MEDIAN BARRIER

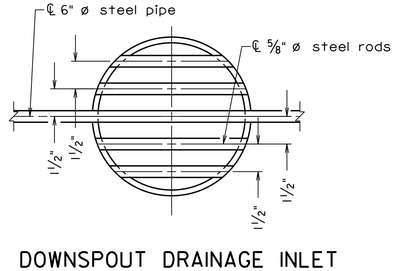

DOWNSPOUT DRAINAGE INLET OPENING DETAIL
Not to scale

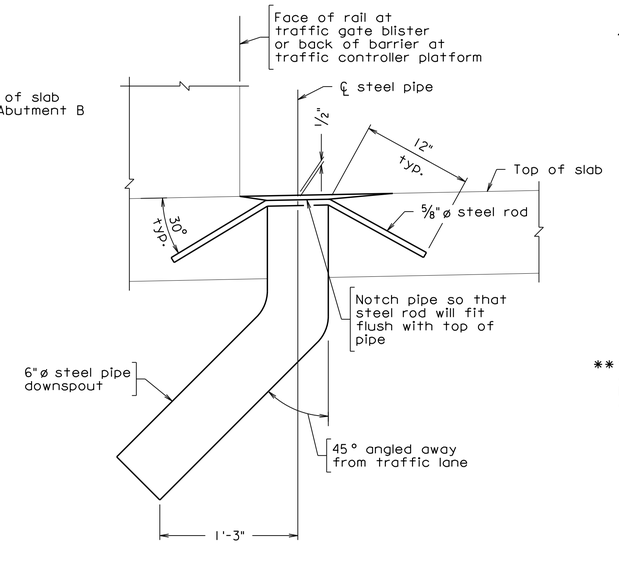

SECTION A-A
Scale: 1½" = 1'-0"

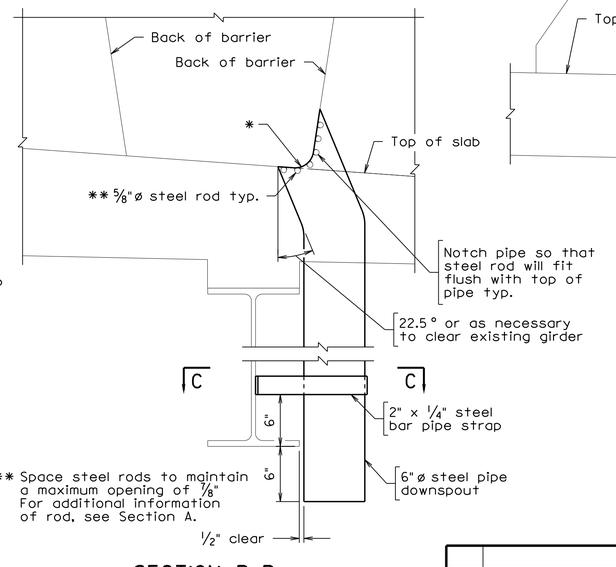

SECTION B-B
Scale: 1½" = 1'-0"

Scale: ¾" = 1'-0" unless otherwise noted.

© 2022, Commonwealth of Virginia

COMMONWEALTH OF VIRGINIA
JEREMY SCHLUSSEL
Lic. No. 033974
PROFESSIONAL ENGINEER

Jeremy Schlussel
2022.07.08 18:40:56 -04'00'

WHITMAN REQUARDT & ASSOCIATES
RICHMOND, VA
STRUCTURAL ENGINEER

No.	Description	Date
	Revisions	

COMMONWEALTH OF VIRGINIA
DEPARTMENT OF TRANSPORTATION

STRUCTURE AND BRIDGE DIVISION

DECK DRAINAGE DETAILS

Designed: MRD	Date	Plan No.	Sheet No.
Drawn: MRD	July 2022	257-38A	69a of 125
Checked: GTS			

257-38A_069a.dgn

STATE	FEDERAL AID		STATE		SHEET NO.
	ROUTE	PROJECT	ROUTE	PROJECT	
VA.	——		95	0095-076-299, B688	70

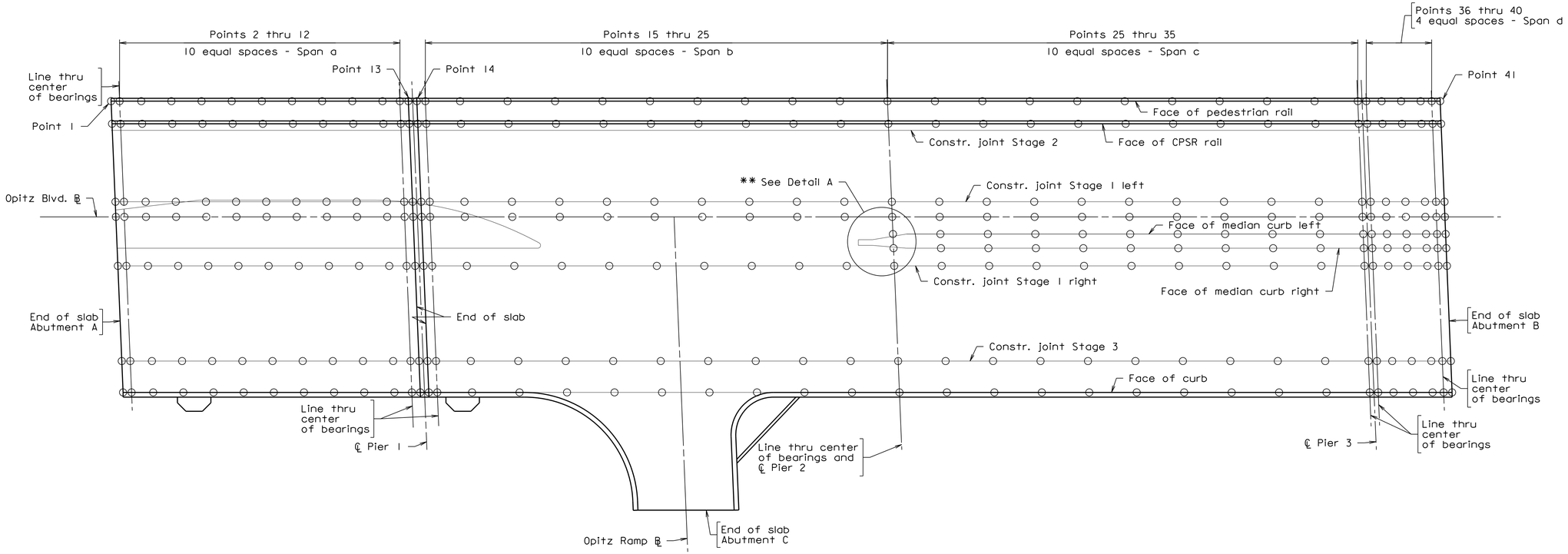

DECK SLAB ELEVATIONS - SPANS a THRU d

TOP OF DECK SLAB ELEVATION TABLE

	Point	1	2	3	4	5	6	7	8	9	10	11	12	13	14	15	16	17	18	19	20	21	22
	Face of Pedestrian Rail	216.21	216.22	216.33	216.42	216.51	216.58	216.65	216.71	216.76	216.81	216.84	216.87	216.87	216.87	216.88	216.90	216.90	216.89	216.85	216.79	216.71	216.61
*	Face of CPSR Rail	216.34	216.35	216.45	216.55	216.63	216.71	216.78	216.84	216.89	216.93	216.97	217.00	217.00	217.00	217.00	217.03	217.03	217.01	216.97	216.91	216.83	216.73
	Constr. joint at Stage 2	216.39	216.40	216.50	216.60	216.68	216.76	216.83	216.89	216.94	216.98	217.02	217.05	217.05	217.05	217.05	217.07	217.08	217.06	217.02	216.96	216.88	216.78
	Constr. joint at Stage 1 Left	216.92	216.94	217.04	217.13	217.22	217.29	217.36	217.42	217.47	217.51	217.55	217.58	217.58	217.58	217.58	217.60	217.60	217.58	217.54	217.48	217.40	217.30
	Optiz Blvd. B	217.04	217.05	217.15	217.25	217.33	217.41	217.47	217.53	217.58	217.63	217.66	217.69	217.69	217.69	217.69	217.71	217.71	217.70	217.66	217.59	217.51	217.41
*	Face of Median Curb Left	——	——	——	——	——	——	——	——	——	——	——	——	——	——	——	——	——	——	——	——	——	——
*	Face of Median Curb Right	——	——	——	——	——	——	——	——	——	——	——	——	——	——	——	——	——	——	——	——	——	——
	Constr. joint Stage 1 Right	216.68	216.70	216.80	216.89	216.97	217.05	217.12	217.17	217.23	217.27	217.30	217.33	217.33	217.33	217.33	217.35	217.35	217.33	217.29	217.23	217.15	217.04
	Constr. joint Stage 3	215.99	216.01	216.11	216.20	216.28	216.36	216.42	216.48	216.53	216.57	216.60	216.63	216.63	216.63	216.63	216.65	216.65	216.63	216.59	216.52	216.44	216.33
*	Face of Curb	215.77	215.78	215.88	215.97	216.06	216.13	216.19	216.25	216.30	216.34	216.37	216.40	216.40	216.40	216.40	216.42	216.42	216.40	216.35	216.29	216.20	216.10

	Point	23	24	25	26	27	28	29	30	31	32	33	34	35	36	37	38	39	40	41
	Face of Pedestrian Rail	216.48	216.34	216.18	215.98	215.78	215.54	215.29	215.02	214.72	214.40	214.06	213.69	213.31	213.26	213.11	212.96	212.80	212.64	212.59
*	Face of CPSR Rail	216.61	216.46	216.30	216.10	215.90	215.66	215.41	215.14	214.84	214.52	214.18	213.81	213.42	213.38	213.23	213.07	212.92	212.76	212.71
	Constr. joint at Stage 2	216.65	216.51	216.34	216.15	215.94	215.71	215.46	215.18	214.88	214.56	214.22	213.86	213.47	213.43	213.28	213.12	212.96	212.80	212.76
	Constr. joint at Stage 1 Left	217.17	217.03	216.86	216.67	216.46	216.22	215.97	215.69	215.39	215.07	214.73	214.36	213.97	213.93	213.78	213.62	213.46	213.30	213.26
	Optiz Blvd. B	217.28	217.14	216.97	216.77	216.56	216.33	216.08	215.80	215.50	215.18	214.83	214.47	214.08	214.03	213.88	213.73	213.57	213.41	213.36
*	Face of Median Curb Left	——	——	217.02	216.90	216.69	216.45	216.20	215.92	215.62	215.30	214.95	214.59	214.20	214.15	214.00	213.85	213.69	213.53	213.48
*	Face of Median Curb Right	——	——	216.73	216.54	216.33	216.09	215.84	215.56	215.26	214.94	214.59	214.23	213.84	213.79	213.64	213.48	213.33	213.16	213.12
	Constr. joint Stage 1 Right	216.92	216.77	216.60	216.40	216.19	215.96	215.70	215.42	215.12	214.80	214.46	214.09	213.70	213.66	213.50	213.35	213.19	213.03	212.98
	Constr. joint Stage 3	216.20	216.05	215.88	215.69	215.47	215.24	214.98	214.70	214.40	214.07	213.73	213.36	212.96	212.92	212.77	212.61	212.45	212.29	212.24
*	Face of Curb	215.97	215.82	215.65	215.45	215.24	215.00	214.74	214.46	214.16	213.83	213.48	213.12	212.72	212.68	212.53	212.37	212.21	212.05	212.00

257-38A_070.dgn

COMMONWEALTH OF VIRGINIA
JEREMY SCHLUSSEL
Lic. No. 033974
PROFESSIONAL ENGINEER

Jeremy Schlussel
2022.07.08 18:41:25 -04'00'

WHITMAN REQUARDT & ASSOCIATES
RICHMOND, VA
STRUCTURAL ENGINEER

Notes:

Deck slab elevations are on top of finished roadway at faces of rails/curbs and at edges of proposed latex. Those shown on Opitz Blvd. BL are at point of finished grade denoted on the transverse section.

Straight line interpolation for intermediate elevations on top of finished roadway may be made in any direction between any two adjacent points.

For additional notes, see sheet 70a.

* Locations where deck has ½ inch step. Elevations at these locations are provided for the deck at ½ inch lower. Deck shall be at projected existing top of deck under bridge barriers. For clarification, see Detail B on sheet 36.

** For Detail A, see sheet 71.

Scale: 1" = 20' unless otherwise noted.

© 2022, Commonwealth of Virginia

No.	Description	Date
Revisions		

COMMONWEALTH OF VIRGINIA
DEPARTMENT OF TRANSPORTATION

STRUCTURE AND BRIDGE DIVISION

DECK SLAB ELEVATIONS
SPAN a THRU SPAN d

Designed: MRD	Date	Plan No.	Sheet No.
Drawn: CRR	July 2022	257-38A	70 of 125
Checked: GTS			

STATE	FEDERAL AID		STATE		SHEET NO.
	ROUTE	PROJECT	ROUTE	PROJECT	
VA.	—		95	0095-076-299, B688	70a

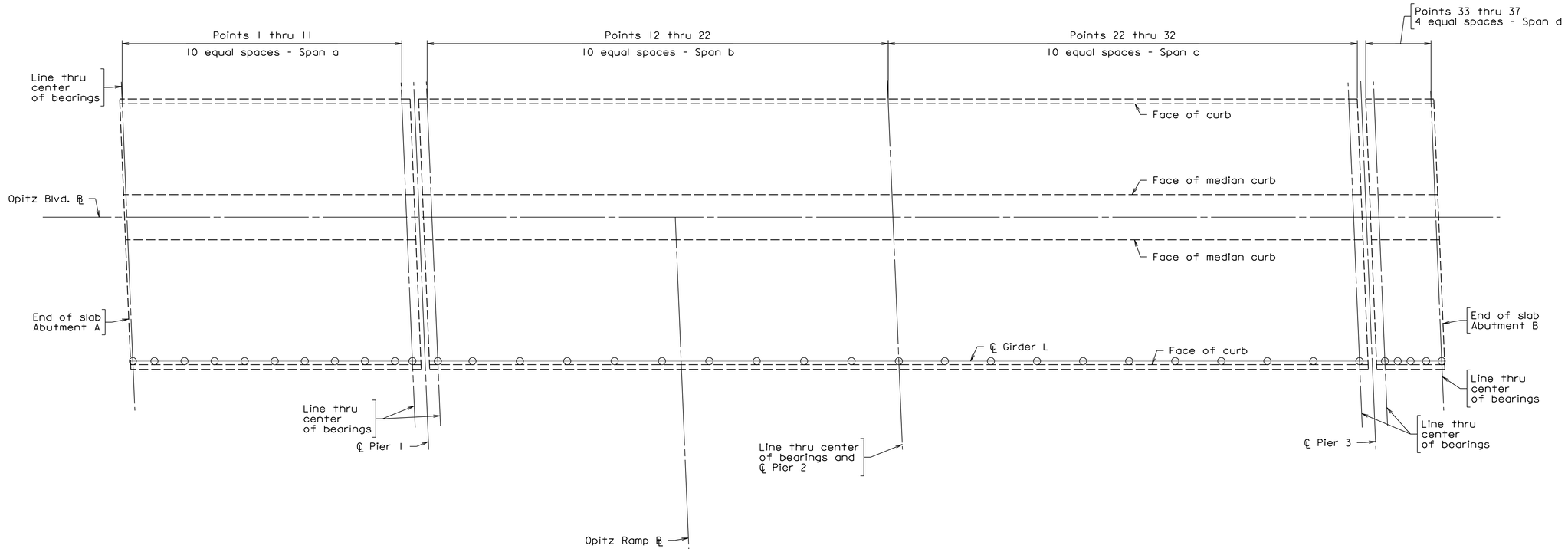

EXISTING DECK SLAB ELEVATIONS

TOP OF DECK SLAB ELEVATION TABLE

Point	1	2	3	4	5	6	7	8	9	10	11	12	13	14	15	16	17	18	19	20	21	22	23	24	25	26	27	28	29	30	31	32	33	34	35	36	37
Girder L Plan	216.05	216.15	216.24	216.32	216.40	216.46	216.52	216.57	216.61	216.65	216.67	216.67	216.69	216.69	216.67	216.63	216.56	216.48	216.37	216.24	216.10	215.93	215.73	215.51	215.28	215.02	214.74	214.44	214.11	213.77	213.40	213.01	212.96	212.81	212.65	212.49	212.33
Girder L Field																																					

Notes:

As this project includes widening, longitudinal and transverse joint closure, overhang reconstruction and overlay, consideration of existing deck elevations will be important to ensure that proper cross slope and grade are maintained throughout the project. Widening is based on maintaining the existing cross slope and grade along Opitz Blvd. For all operations, Contractor shall check proposed work based on existing cross slope that will be achieved by elevations proposed here-in. If field discrepancies are found, elevations shall be adjusted in coordination and with approval of the Engineer.

Deck shall be cast to match existing cross slope and projected existing top of deck except at locations within limits of mill and overlay. To reduce the required milling, deck within limits of mill and overlay shall be cast ½ inch lower than the existing top of deck and shall match existing cross slope. Concrete cover shall also be reduced by ½ inch. Below the proposed overlay the reconstructed deck shall be milled ½ inch to provide a uniform milled surface 1½ inches below final surface of latex overlay and the existing deck shall be milled 1½ inches and recieve ½ inch hydrodemolition to provide a uniform milled surface 2½ inches below final surface of latex overlay. Overlay shall match the existing cross slope and top of overlay shall be ½ inch higher than existing top of deck. Deck in Span e shall be cast full depth and full concrete cover; final deck surface shall match top of overlay (½ inch higher than existing top of deck).

Top of deck elevations on sheets 70-71 and 48-52 are to top of cast deck and not to top of overlay. Elevations are calculated based on a best fit profile and match existing cross slope. Elevations within limits of overlay reflect ½ inch lower than top of projected existing deck. If field conditions prevent reconstruction of the deck as noted above, Contractor shall notify the Engineer.

CPSR rail and BPB-3A parapets shall be cast on projected top of existing deck and at traffic face where overlay limit occurs there will be a ½ inch step in the reconstructed deck. For typical detail see Detail B on sheet 36.

Point of finished grade shall be at Opitz Blvd. baseline except at median barrier. The point of finished grade at the median barrier shall be the north face of median barrier. The top of deck shall transition from matching existing cross slope at start of median barrier to opposite of existing cross slope at end of deck transition. The south face of median barrier shall match existing top of deck. The top of deck under the median barrier shall be a straight slope from north face to south face. Limits of overlay extend to face of median barrier and there will be a ½ inch step at both faces of median barrier. See Detail A for additional information.

Contractor shall survey top of existing deck at Girder L prior to and after removal of existing overhang in Stage 3. Notify the Engineer if any elevations vary by more than ½ inch in the table. Elevations may be adjusted to compensate for variability along Girder L in coordination with the Engineer.

For limits of mill and overlay see sheet 36.

COMMONWEALTH OF VIRGINIA
JEREMY SCHLUSSEL
Lic. No. 033974
PROFESSIONAL ENGINEER

Jeremy Schlussel
2022.07.08 18:39:35 -04'00'

WHITMAN REQUARDT & ASSOCIATES
RICHMOND, VA
STRUCTURAL ENGINEER

Scale: 1" = 20' unless otherwise noted.

© 2022, Commonwealth of Virginia

No.	Description	Date
	Revisions	

COMMONWEALTH OF VIRGINIA
DEPARTMENT OF TRANSPORTATION

STRUCTURE AND BRIDGE DIVISION

EXISTING DECK SLAB ELEVATIONS
GIRDER L

Designed: MRD	Date	Plan No.	Sheet No.
Drawn: CRR	July 2022	257-38A	70a of 125
Checked: GTS			

257-38A_070a.dgn

STATE	FEDERAL AID		STATE		SHEET NO.
	ROUTE	PROJECT	ROUTE	PROJECT	
VA.	—		95	0095-076-299, B688	71

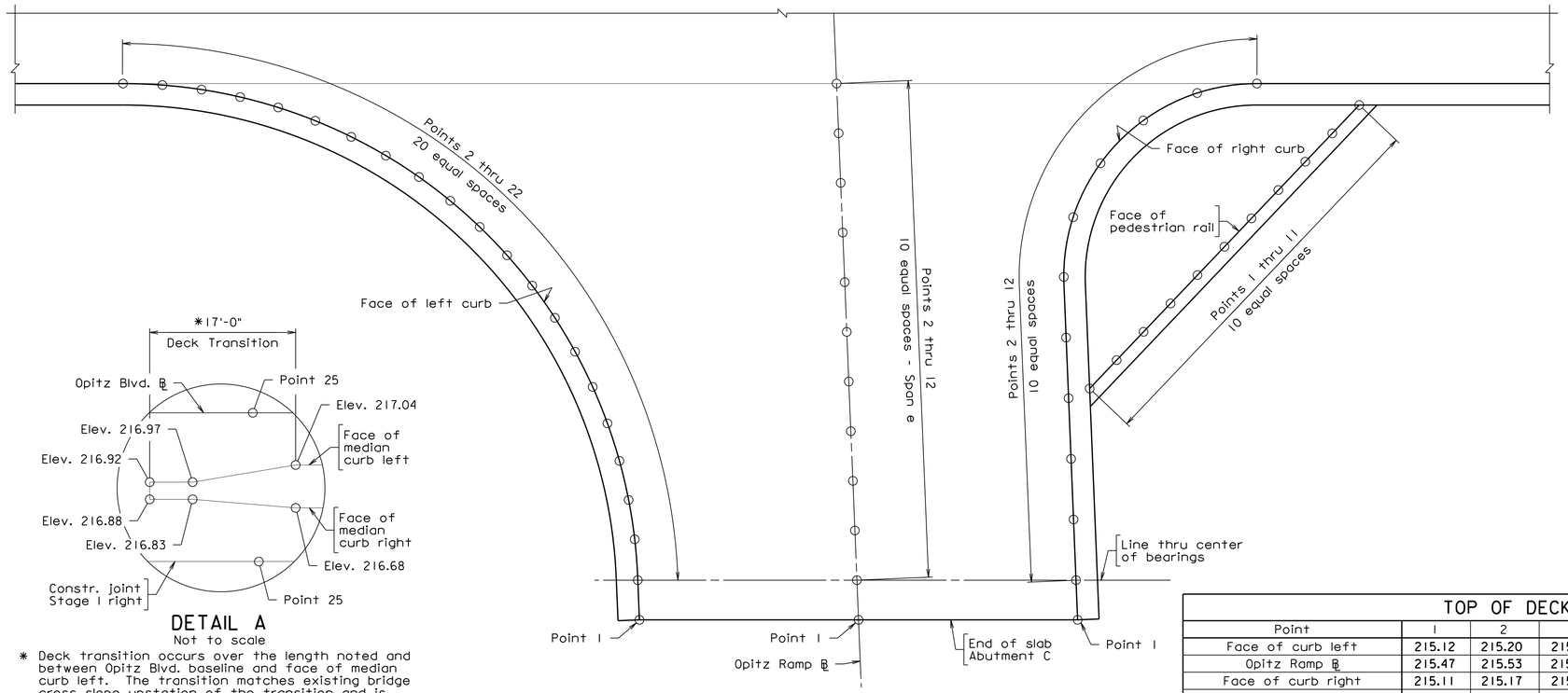

DECK SLAB ELEVATIONS - SPAN e

DETAIL A
Not to scale

* Deck transition occurs over the length noted and between Opitz Blvd. baseline and face of median curb left. The transition matches existing bridge cross slope upstation of the transition and is reverse the existing cross slope downstation of the transition.

Notes:

Deck slab elevations are on top of finished roadway at faces of curbs. Those shown on Opitz Ramp ℄ are at point of finished grade denoted on the transverse section.

Straight line interpolation for intermediate elevations on top of finished roadway may be made in any direction between any two adjacent points.

The Contractor may combine 1-4 with 1-1, 1-2 or 1-3.

The Contractor may combine 2-8 with 2-5, 2-6 or 2-7.

The Contractor may combine 3-12 with 3-9, 3-10 or 3-11.

If concrete is maintained in a plastic state for full duration of pour, the Contractor may make the following combinations:

1-2 and 1-3

1-1, 1-2 and 1-3

2-6 and 2-7

2-5, 2-6 and 2-7

3-10 and 3-11

3-9, 3-10 and 3-11

3-13 and 3-14

For additional notes, see sheet 70a.

For location of Detail A, see sheet 70.

TOP OF DECK SLAB ELEVATION TABLE

Point	1	2	3	4	5	6	7	8	9	10	11
Face of curb left	215.12	215.20	215.27	215.33	215.40	215.46	215.53	215.60	215.66	215.73	215.79
Opitz Ramp ℄	215.47	215.53	215.61	215.69	215.77	215.85	215.94	216.02	216.10	216.18	216.26
Face of curb right	215.11	215.17	215.27	215.36	215.46	215.56	215.65	215.75	215.85	215.94	216.04
Face of pedestrian rail	215.48	215.54	215.59	215.64	215.70	215.75	215.81	215.86	215.91	215.97	216.02

Point	12	13	14	15	16	17	18	19	20	21	22
Face of curb left	215.86	215.93	216.00	216.07	216.15	216.22	216.29	216.34	216.40	216.45	216.50
Opitz Ramp ℄	216.34	--	--	--	--	--	--	--	--	--	--
Face of curb right	216.14	--	--	--	--	--	--	--	--	--	--
Face of pedestrian rail	--	--	--	--	--	--	--	--	--	--	--

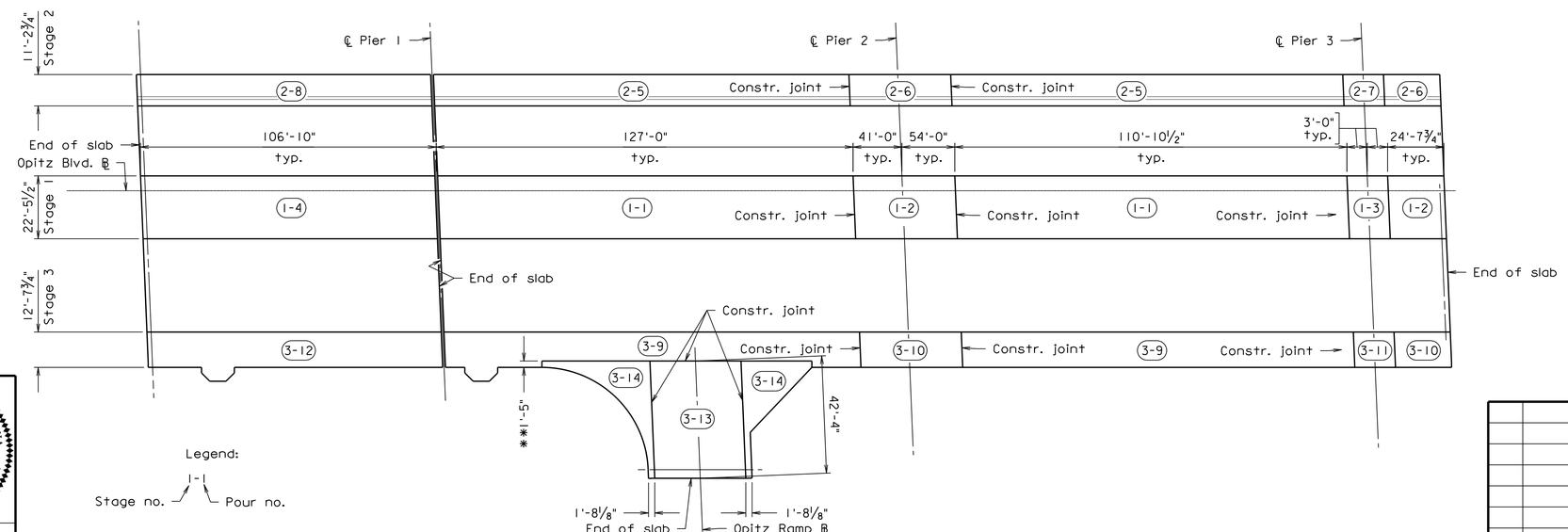

Legend:

1-1
Stage no. — Pour no.

**Contruction joint to be located between shear studs.

DECK POURING SEQUENCE
Not to scale

Scale: 3/16" = 1'-0" unless otherwise noted.

© 2022, Commonwealth of Virginia

COMMONWEALTH OF VIRGINIA
JEREMY SCHLUSSEL
Lic. No. 033974
PROFESSIONAL ENGINEER

Jeremy Schlussel
2022.07.08 18:39:53 -04'00'

WHITMAN REQUARDT & ASSOCIATES
RICHMOND, VA
STRUCTURAL ENGINEER

No.	Description	Date
	Revisions	

COMMONWEALTH OF VIRGINIA
DEPARTMENT OF TRANSPORTATION

STRUCTURE AND BRIDGE DIVISION

DECK SLAB ELEVATIONS - SPAN e AND DECK POURING SEQUENCE

Designed: MRD	Date	Plan No.	Sheet No.
Drawn: CRR	July 2022	257-38A	71 of 125
Checked: GTS			

257-38A_071.dgn

STATE	FEDERAL AID		STATE		SHEET NO.
	ROUTE	PROJECT	ROUTE	PROJECT	
VA.	—		95	0095-076-299, B688	72

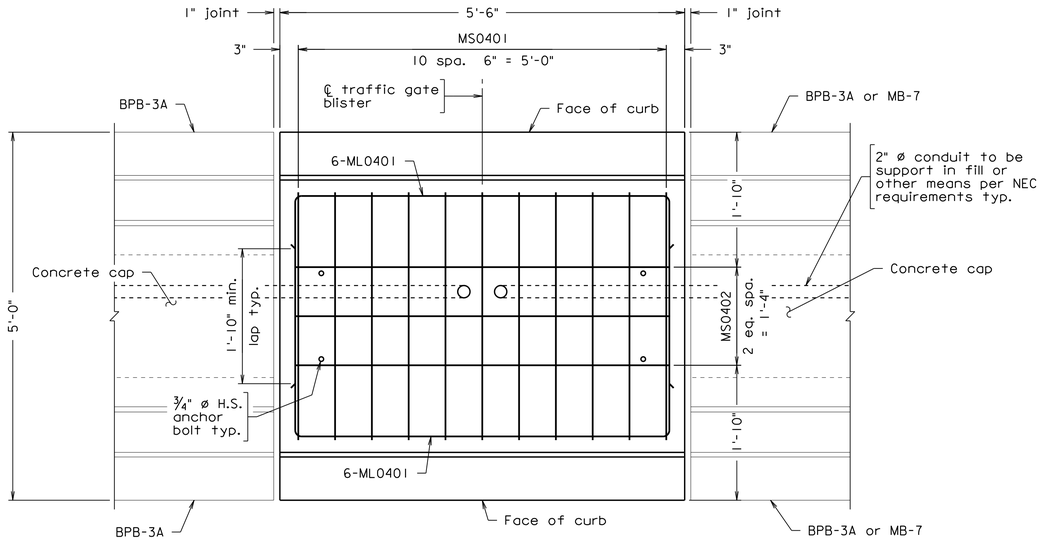

PLAN AT TRAFFIC GATE BLISTER

Parapet reinforcing steel and traffic gate not shown for clarity.

REINFORCING STEEL SCHEDULE

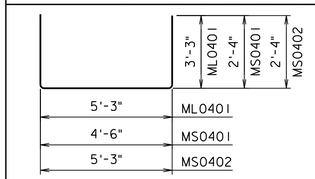

ML0401, MS0401, MS0402

Mark	No.	Size	Pin ø	Length	Location
ML0401		#4	2"	11'-6⅞"	Blister
MS0401		#4	2"	8'-11⅞"	Blister
MS0402		#4	2"	9'-8⅞"	Blister
RV0401	⊙	#4			
RV0502	⊙	#5			
RV0503	⊙	#5			
RV0504	⊙	#5			
RV0505	⊙	#5			
RL04	⊙	#4			

Dimensions in bending diagram are out-to-out of bars.

⊙ Bars RV0401, RV0502, RV0503, RV0504, RV0505, and RL04 are detailed and accounted for on parapet detail sheet.

Notes:

Traffic gate shall be supplied by others. Anchor bolt locations shall be per traffic gate manufacturer's recommendations.

All reinforcing bars shall be corrosion resistant reinforcing steel - Class II.

All concrete shall be Low Shrinkage Class A4 Modified (Lightweight).

All bevels for concrete shall be 3/4 ".

See sheet 82b for concrete dimensions and reinforcing steel details.

Concrete and additional reinforcing steel as shown on this sheet shall be incidental to NS median Barrier.

Anchor bolts shall be hot dip galvanized.

All conduit embedded in concrete or lightweight fill shall be galvanized.

For location of traffic gate blisters, see sheet 65.

For conduit notes and additional traffic gate conduit details, see sheet 97a.

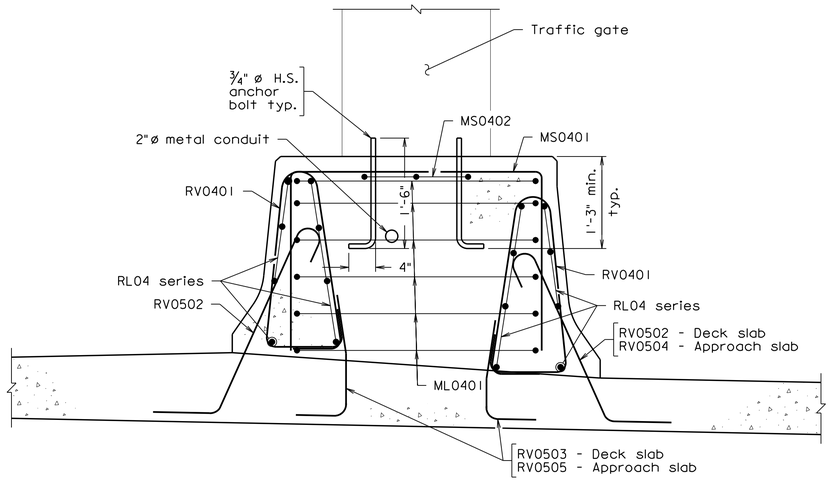

SECTION AT TRAFFIC GATE BLISTER

Deck reinforcing steel not shown for clarity

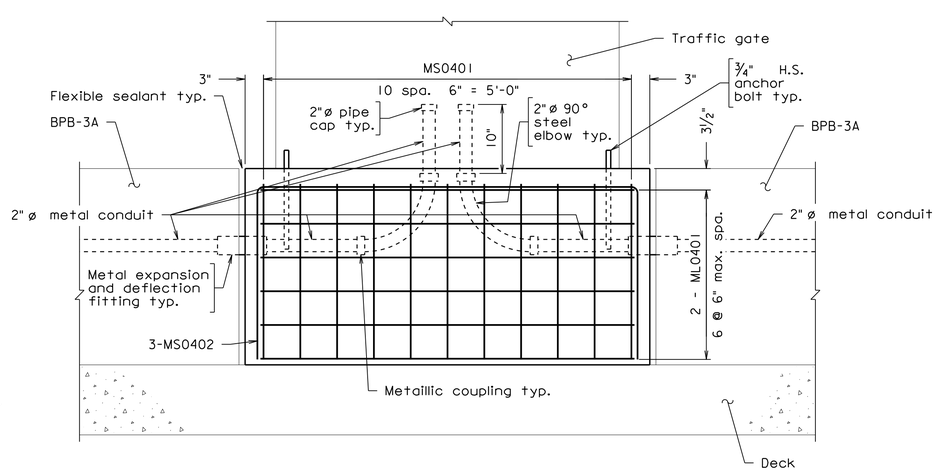

ELEVATION AT TRAFFIC GATE BLISTER

Parapet and deck reinforcing steel not shown for clarity.

257-38A_072.dgn

COMMONWEALTH OF VIRGINIA
JEREMY SCHLUSSEL
Lic. No. 033974
PROFESSIONAL ENGINEER

Jeremy Schlussel
2022.07.08 18:40:14 -04'00'

WHITMAN REQUARDT & ASSOCIATES
RICHMOND, VA
STRUCTURAL ENGINEER

Scale: 1" = 1'-0"

© 2022, Commonwealth of Virginia

No.	Description	Date
Revisions		

COMMONWEALTH OF VIRGINIA
DEPARTMENT OF TRANSPORTATION

STRUCTURE AND BRIDGE DIVISION

MEDIAN TRAFFIC GATE BLISTER DETAILS

Designed: WRA	Date	Plan No.	Sheet No.
Drawn: WRA	July 2022	257-38A	72 of 125
Checked: WRA			

STATE	FEDERAL AID		STATE		SHEET NO.
	ROUTE	PROJECT	ROUTE	PROJECT	
VA.	—		95	0095-076-299, B688	73

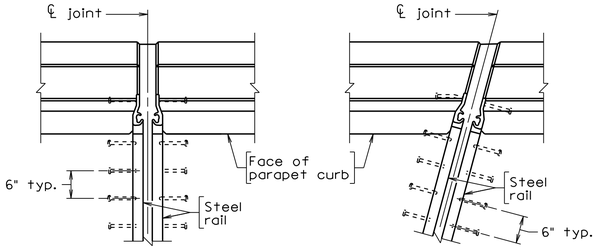

(Straight Crossing)

(Skew ≤ 10°)

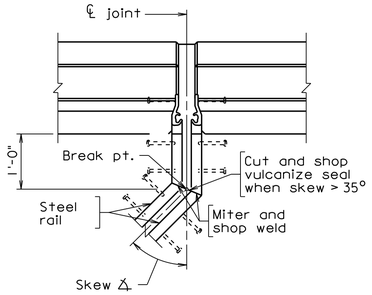

(Skew > 10°)

PARTIAL PLANS AT PARAPETS

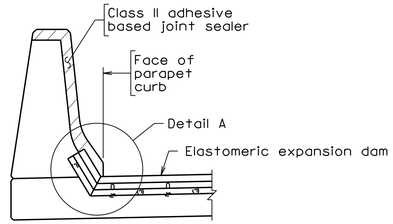

PARAPET SECTION

Notes:

Shop drawings of the dam and corresponding slab opening(s) and anchor details shall be submitted to the Engineer for review in accordance with Section 105.10 of the Specifications.

Non-stainless ferrous metal shall be ASTM A36 and shall be thermal spray coated in accordance with Section 411 of the Specifications.

All bolts, nuts, washers and screws shall be ASTM A276, Type 304 stainless steel.

Sidewalk and median cover plates shall be ASTM A36 with non-slip (deformed) surface.

Steel sections shall be furnished in minimum lengths of 18' and shall be field welded into continuous sections. Welds shall be ground smooth in areas where they will be in contact with the elastomer.

Where the total length of the joint is less than 40', the minimum length of steel sections shall be half of the total length of the joint.

Cost of Class II adhesive based joint sealer associated with Elastomeric Expansion Dam is to be included in the bid price of Elastomeric Expansion Dam.

For details of Adhesive based joint sealer Class II, see sheet 75.

Abutment	Pier	A (at 60°F)	t	Total Movement	Skew Angle
	1	2⅛"	¼"	3⅜"	2°-21'-10"

"A" shall be increased or decreased for every 10°F temperature drop or rise respectively by "+", "A" is measured perpendicular to the joint centerline.

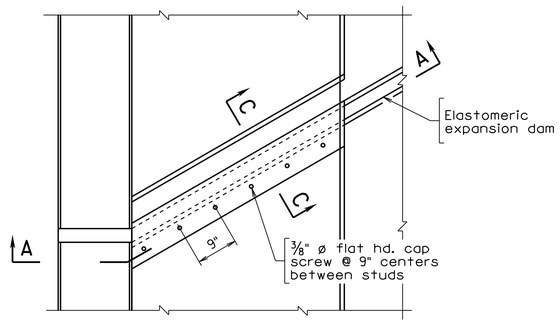

(Skew ≤ 45°)

PLAN AT SIDEWALK

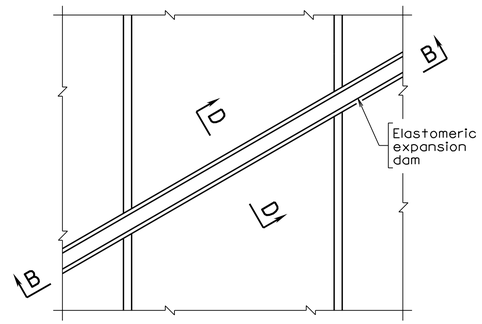

(Skew ≤ 45°)

PLAN AT RAISED MEDIAN

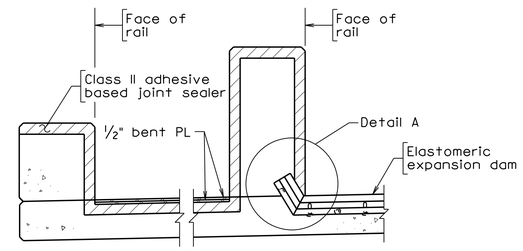

SECTION A-A

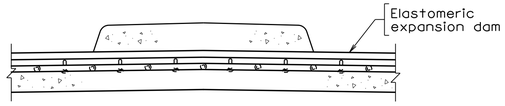

SECTION B-B

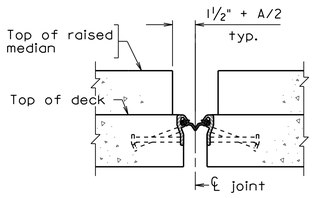

SECTION D-D

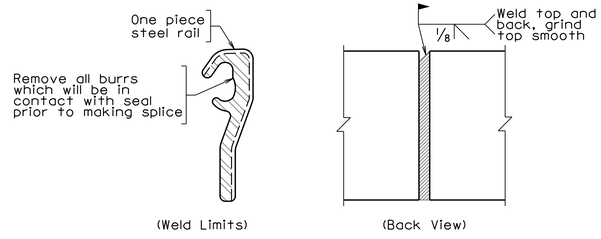

FIELD SPLICE DETAIL

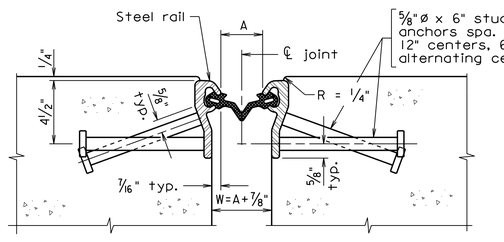

TYPICAL SECTION

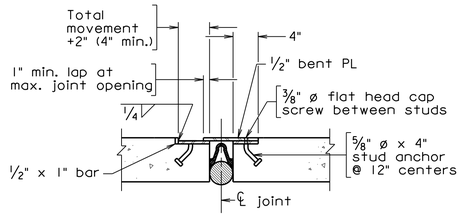

SECTION C-C

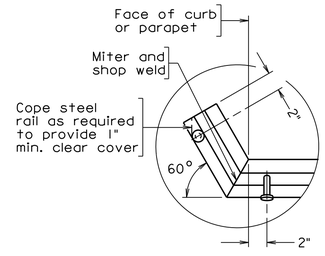

DETAIL A

Not to scale

© 2022, Commonwealth of Virginia

No.	Description	Date
	Revisions	

COMMONWEALTH OF VIRGINIA
DEPARTMENT OF TRANSPORTATION

STRUCTURE AND BRIDGE DIVISION

ELASTOMERIC EXPANSION DAM

Designed: CRR	Date	Plan No.	Sheet No.
Drawn: CRR	July 2022	257-38A	73 of 125
Checked: MRD			

BDEJ-4 MOD 05-03-2018

257-38A_073.dgn

COMMONWEALTH OF VIRGINIA
JEREMY SCHLUSSEL
Lic. No. 033974
PROFESSIONAL ENGINEER

Jeremy Schlussel
2022.07.08 18:40:34 -04'00'

WHITMAN REQUARDT & ASSOCIATES
RICHMOND, VA
STRUCTURAL ENGINEER

STATE	FEDERAL AID		STATE		SHEET NO.
	ROUTE	PROJECT	ROUTE	PROJECT	
VA.	—		95	0095-076-299, B688	74

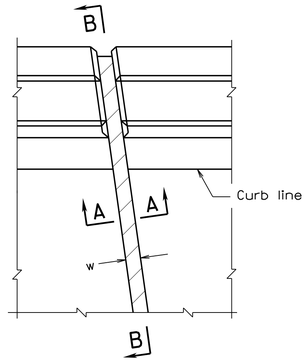

ABUTMENT A AND B

PART PLAN - ≤ 20 SKEWED CROSSING

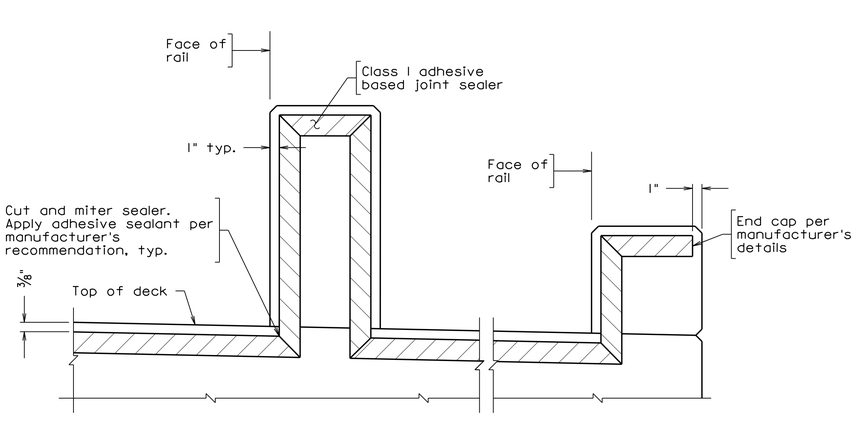

AT CPSR-2

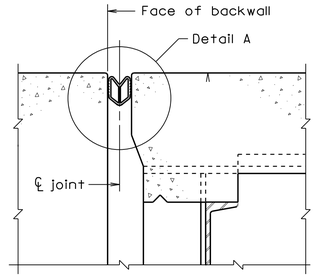

SECTION A-A

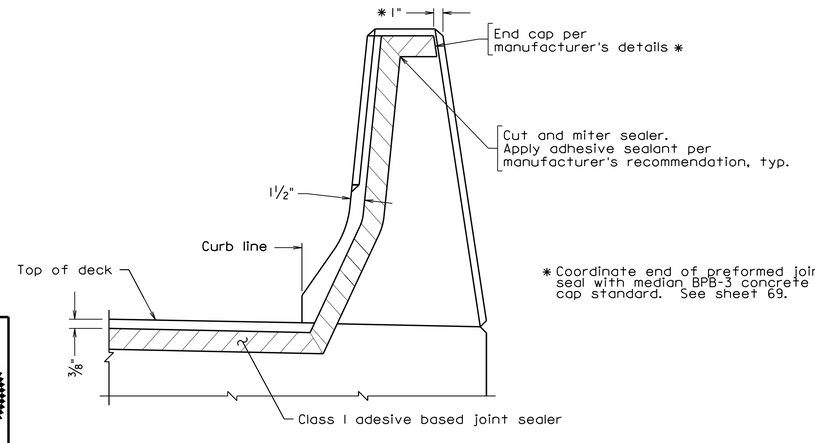

AT BPB-3A

SECTION B-B

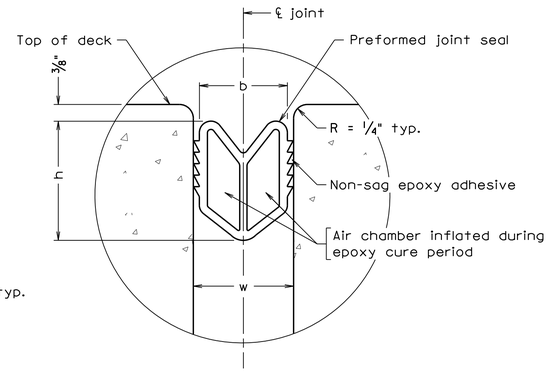

DETAIL A

* Coordinate end of preformed joint seal with median BPB-3 concrete cap standard. See sheet 69.

Notes:

Sealer shall be installed in one continuous piece except for sidewalk and barrier areas.

Joint width 'w' is the final joint width of the cured concrete when placed at 60°F. The width 'w' shall be increased or decreased for every 10°F temperature drop or rise respectively by t. When formed, joint width 'w' shall be reduced by the amount Δ to compensate for the opening of the joint caused by the deflection of the beam when the deck concrete is placed. If the joint is formed so that the form material will not move and the joint will not open as the deck concrete is placed, then adjustment Δ shall not be made.

Fixed Bearing: $\Delta = \frac{4d\ \Delta's}{L}$

Expansion Bearing: $\Delta = \frac{d\ \Delta's}{L}$

d = Total rotation depth from top of slab to point of rotation on bearing.

Δ's = Deflection of beam at midspan from dead load of concrete deck slab and bolsters. (See Dead Load Delection Diagram.)

L = Length of span.

Δ = Compensation for joint opening due to deflection of beam during placement of concrete deck slab and bolsters for the last span placed adjacent to the joint.

All the dimensions are in the same units.

Graphics on this standard for the barrier shown may not match all barriers on bridge. All other details apply.

Class I adhesive joint sealer at Abutment C shall be incidental to other items.

For details of bent PL and Class II adhesive based joint sealer, see sheets 73 and 75.

Abutment	Pier	Sealer Size b	Sealer Depth h	Joint Width w	t	Skew Angle
A		2"	3⅛"	2"	0"	2°-21'-10"
B		2½"	4⅛"	2½"	⅛"	2°-21'-10"

05-03-2018

257-38A_074.dgn

BDEJ-1

COMMONWEALTH OF VIRGINIA
JEREMY SCHLUSSEL
Lic. No. 033974
PROFESSIONAL ENGINEER

Jeremy Schlussel
2022.07.08 18:38:39 -04'00'

WHITMAN REQUARDT & ASSOCIATES
RICHMOND, VA
STRUCTURAL ENGINEER

Not to scale

© 2022. Commonwealth of Virginia

No.	Description	Date
	Revisions	

COMMONWEALTH OF VIRGINIA
DEPARTMENT OF TRANSPORTATION

STRUCTURE AND BRIDGE DIVISION

CLASS I ADHESIVE BASED JOINT SEALER

Designed: CRR	Date	Plan No.	Sheet No.
Drawn: CRR	July 2022	257-38A	74 of 125
Checked: MRD			

STATE	FEDERAL AID		STATE		SHEET NO.
	ROUTE	PROJECT	ROUTE	PROJECT	
VA.	—		95	0095-076-299, B688	75

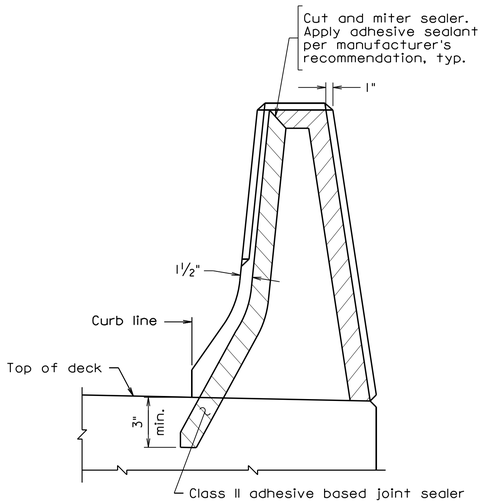

SECTION E-E

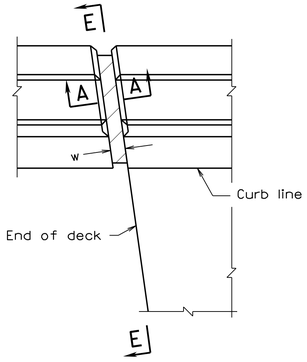

ABUTMENT C

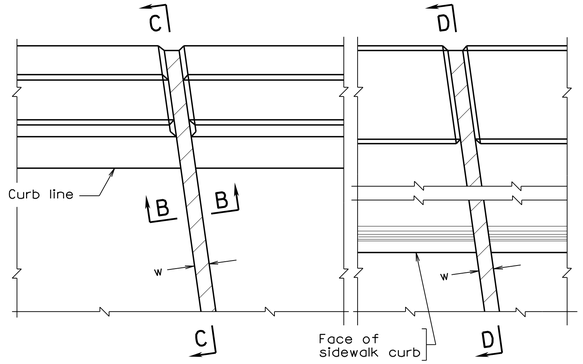

PIER

PIER
WITH SIDEWALK

PART PLAN - ≤ 20 SKEWED CROSSING

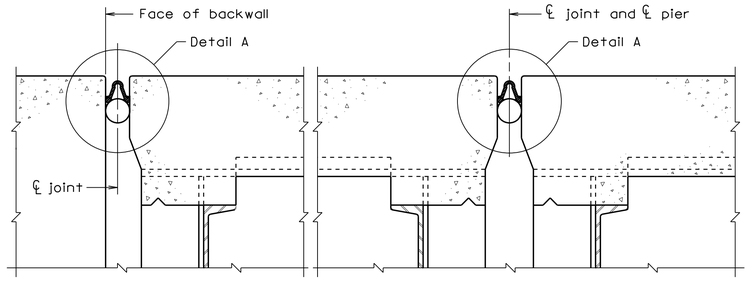

SECTION A-A

SECTION B-B

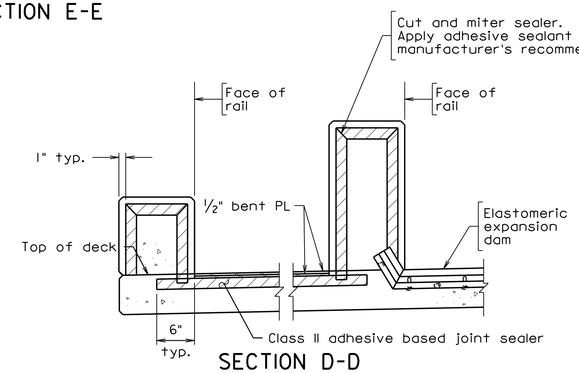

SECTION D-D

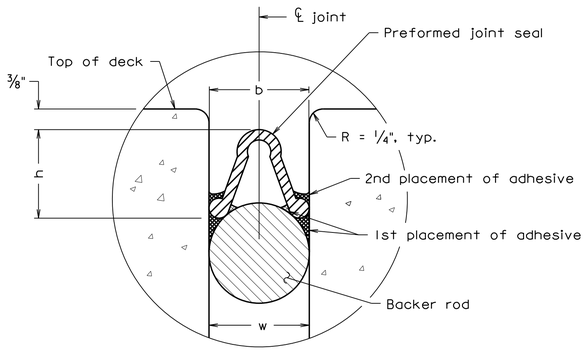

DETAIL A

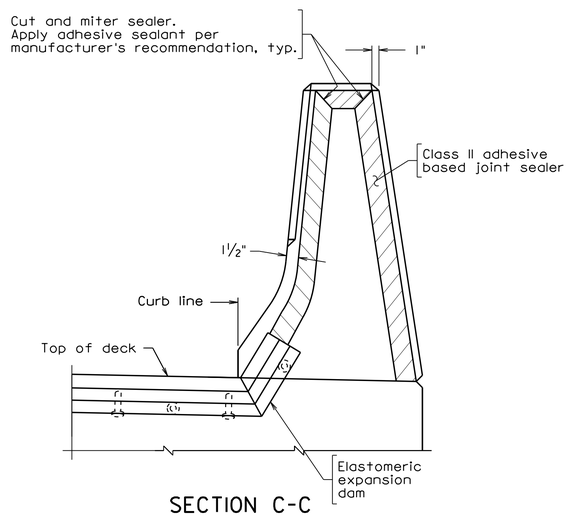

SECTION C-C

Notes:

Sealer shall be installed in one continuous piece except for sidewalk and barrier areas.

Joint width 'w' is the final joint width of the cured concrete when placed at 60°F. The width 'w' shall be increased or decreased for every 10°F temperature drop or rise respectively by t. When formed, joint width 'w' shall be reduced by the amount Δ to compensate for the opening of the joint caused by the deflection of the beam when the deck concrete is placed. If the joint is formed so that the form material will not move and the joint will not open as the deck concrete is placed, then adjustment Δ shall not be made.

Fixed Bearing: $\Delta = \frac{4d\ \Delta's}{L}$

Expansion Bearing: $\Delta = \frac{d\ \Delta's}{L}$

d = Total rotation depth from top of slab to point of rotation on bearing.

Δ's = Deflection of beam at midspan from dead load of concrete deck slab and bolsters. (See Dead Load Delection Diagram.)

L = Length of span.

Δ = Compensation for joint opening due to deflection of beam during placement of concrete deck slab and bolsters for the last span placed adjacent to the joint.

All the dimensions are in the same units.

Graphics on this standard for the barrier shown may not match all barriers on bridge. All other details apply.

Class II adhesive based joint sealer shall be incidental to other items.

For details of bent PLs, see sheet 73.

Abutment	Pier	Sealer Size b	Sealer Depth h	Joint Width w	t	Skew Angle
	I	2"	3¾"	3"	¼"	2°-21'-10"
C		1¼"	2⅝"	1½"	1/16"	2°-20'-33"

257-38A_075.dgn

05-03-2018

BDEJ-2

COMMONWEALTH OF VIRGINIA
JEREMY SCHLUSSEL
Lic. No. 033974
PROFESSIONAL ENGINEER

Jeremy Schlussel
2022.07.08 18:39:04 -04'00'

WHITMAN REQUARDT & ASSOCIATES
RICHMOND, VA
STRUCTURAL ENGINEER

VDOT S&B DIVISION
RICHMOND, VA
STRUCTURAL ENGINEER

Not to scale

© 2022, Commonwealth of Virginia

No.	Description	Date
	Revisions	

COMMONWEALTH OF VIRGINIA
DEPARTMENT OF TRANSPORTATION

STRUCTURE AND BRIDGE DIVISION

CLASS II ADHESIVE BASED JOINT SEALER

Designed: CRR	Date	Plan No.	Sheet No.
Drawn: CRR	July 2022	257-38A	75 of 125
Checked: MJD			

STATE	FEDERAL AID		STATE		SHEET
	ROUTE	PROJECT	ROUTE	PROJECT	NO.
VA.	—		95	0095-076-299, B688	76

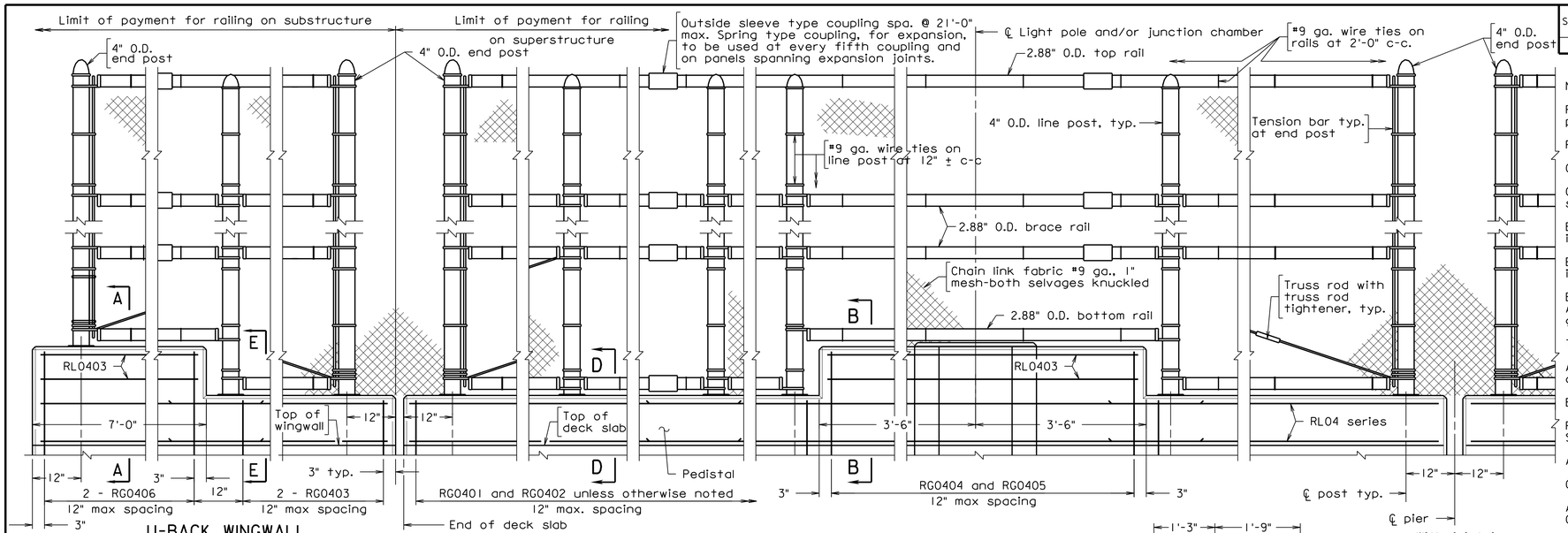

U-BACK WINGWALL

ELEVATION

Scale: ¾" = 1'-0"

Notes:

Posts shall be set vertical. Rails shall be set parallel to the top of pedestal.

Posts shall be equally spaced, not to exceed 8'-0".

Chain link fabric shall be placed on inside of posts and rails.

Chain link fabric, plates, posts, rails and other associated hardware shall be black vinyl coated steel.

Bolts, excluding threads, shall have the same vinyl coating. Threaded inserts shall not be vinyl coated.

Ends of wire ties shall be turned to outside of fence to prevent injury to pedestrians.

Bolts and washers in the Mechanical Lug Detail shall conform to ASTM A276, Type 304 Stainless Steel. All other bolts and hardware shall be galvanized.

Threaded rods shall be ASTM A307 and shall be galvanized.

All posts and rails shall be welded or seamless steel galvanized pipe conforming to ASTM F1083, Schedule 40.

Base plates shall be ASTM A709, Grade 36.

Fence framing (posts and railings) shall be grounded in accordance with Section 507 of the Specifications.

All concrete shall be Low Shrinkage Class A4 Modified (lightweight).

Chamfers for concrete shall be ¾".

All reinforcing steel shall be Corrosion Resistant Reinforcing Steel, Class II.

Bid item price shall include constructing, fabricating, and furnishing materials shown on the plans, including concrete in the pedestal and reinforcing steel in the steel schedule.

For details of light pole pedestal and associated reinforcing steel, see sheet 95.

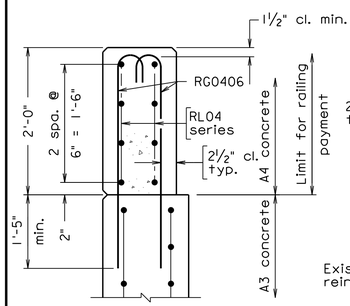

SECTION A-A

Scale: 1" = 1'-0"
Vertical bars in wingwall not shown for clarity

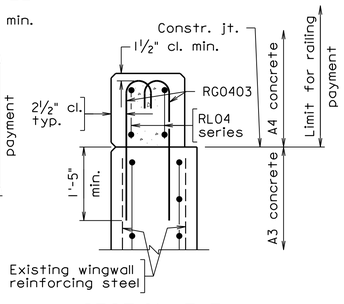

SECTION E-E

Scale: 1" = 1'-0"
Vertical bars in wingwall not shown for clarity

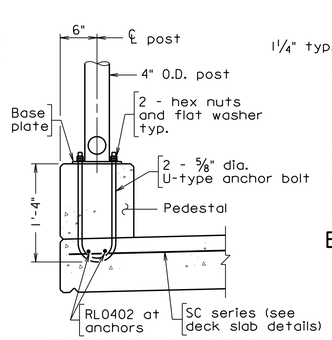

ANCHOR BOLT DETAIL

Scale: 1" = 1'-0"

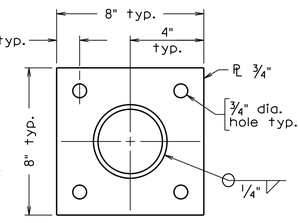

BASE PLATE DETAIL

Scale: 3" = 1'-0"

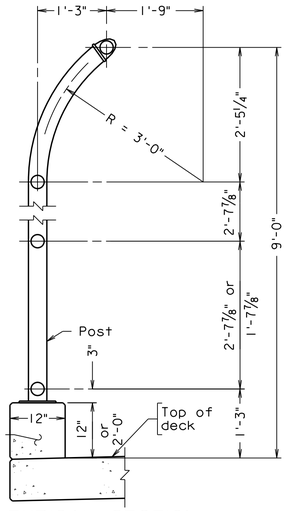

TYPICAL SECTION

Scale: ¾" = 1'-0"

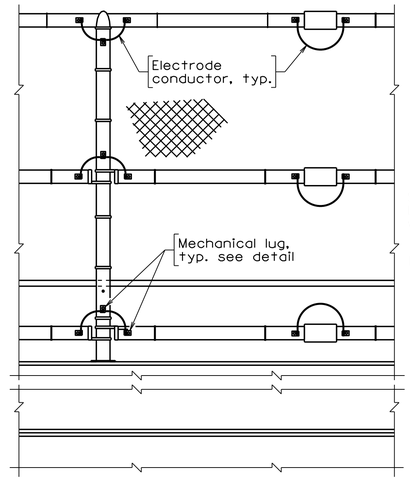

ELECTRICAL CONTINUITY

FOR VINYL COATED STEEL PEDESTRIAN FENCE
(Installed on the non-traffic side of the fence)

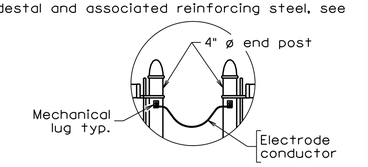

ELECTRICAL CONTINUITY

(On Open Joint)

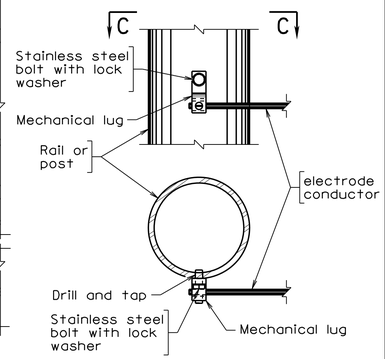

SECTION C-C
MECHANICAL LUG DETAIL

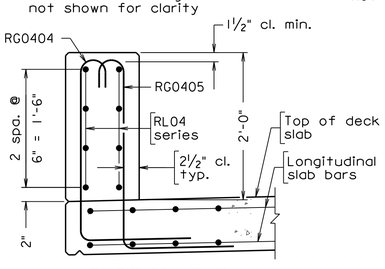

SECTION B-B

Scale: 1" = 1'-0"
Transverse rebars in deck slab not shown for clarity

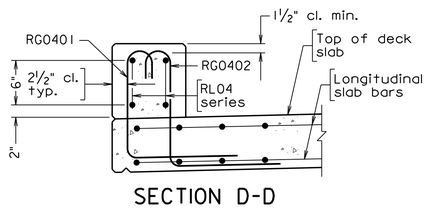

SECTION D-D

Scale: 1" = 1'-0"
Transverse rebars in deck slab not shown for clarity

REINFORCING STEEL SCHEDULE

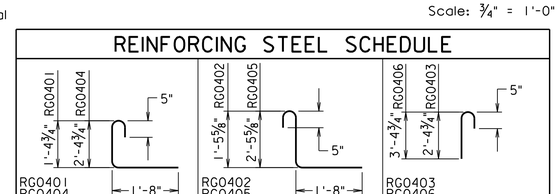

Mark	Size	No.	Length	Pin ø	Location
RG0401	#4		3'-6"	3"	Pedestal/deck slab
RG0402	#4		3'-6⅞"	3"	Pedestal/deck slab
RG0403	#4		2'-11¼"	3"	Pedestal/wingwall
RG0404	#4		4'-6"	3"	Light pole pedestal/deck slab
RG0405	#4		4'-6⅞"	3"	Light pole pedestal/deck slab
RG0406	#4		3'-11¼"	3"	Pedestal/wingwall
RL04	#4			—	Pedestal
RL0402	#4		1'-6"	—	Deck slab/wingwall
RL0403	#4		6'-6"	—	Light pole pedestal

Contractor shall determine number and lengths necessary for installation.

Dimensions in bending diagram are out-to-out of bars.

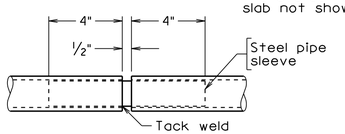

TYPICAL EXPANSION JOINT DETAIL HANDRAIL

Scale: 3" = 1'-0"

Handrail horizontal expansion joint shall be provided at the middle of every 3rd panel and on panels spanning expansion joints.

Scale as noted

© 2022, Commonwealth of Virginia

COMMONWEALTH OF VIRGINIA
JEREMY SCHLUSSEL
Lic. No. 033974
PROFESSIONAL ENGINEER

Jeremy Schlussel
2022.07.08 18:37:19 -04'00'

WHITMAN REQUARDT & ASSOCIATES
RICHMOND, VA
STRUCTURAL ENGINEER

257-38A_076.dgn

BPF-6 MOD. 04-30-2021

No.	Description	Date
	Revisions	

COMMONWEALTH OF VIRGINIA
DEPARTMENT OF TRANSPORTATION

STRUCTURE AND BRIDGE DIVISION

PEDESTRIAN FENCE (BPF-6)

Designed: CRR
Drawn: CRR
Checked: MRD

Date	Plan No.	Sheet No.
July 2022	257-38A	76 of 125

STATE	FEDERAL AID		STATE		SHEET NO.
	ROUTE	PROJECT	ROUTE	PROJECT	
VA.	—		95	0095-076-299, B688	77

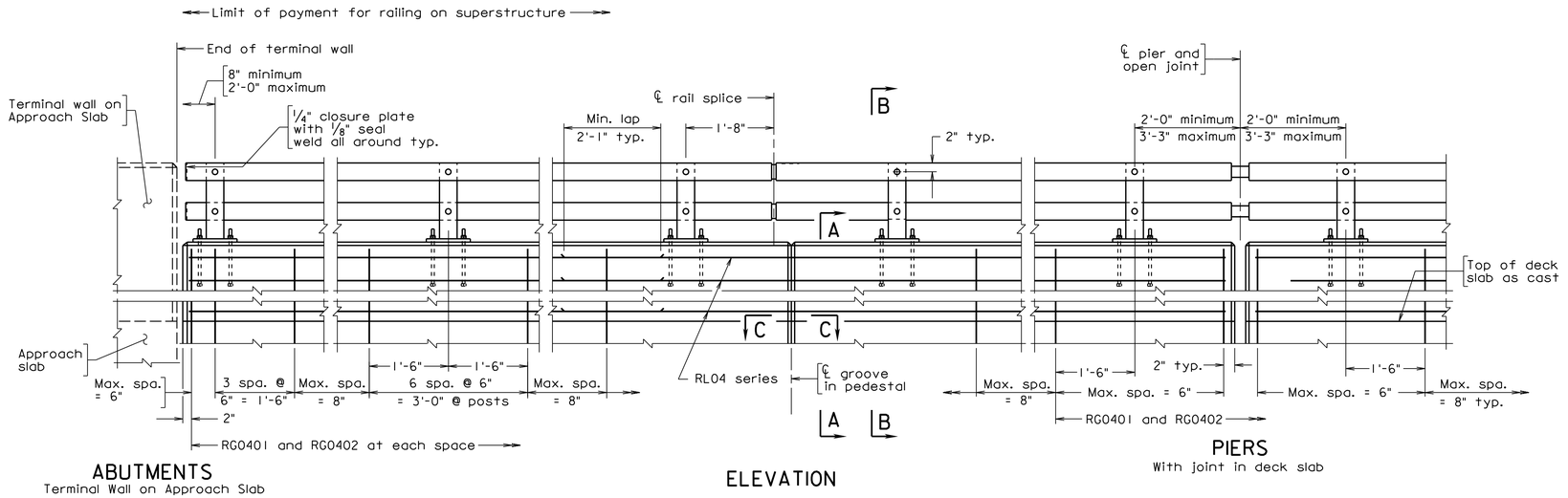

ABUTMENTS
Terminal Wall on Approach Slab

ELEVATION

PIERS
With joint in deck slab

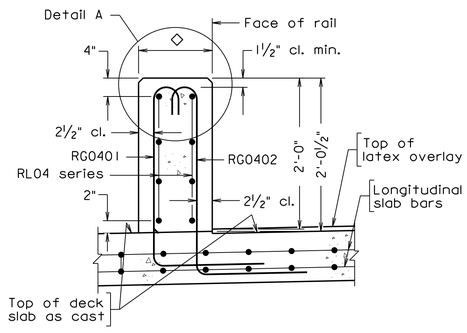

SECTION A-A
Scale: 1" = 1'-0"

Transevese rebars in deck not shown for clarity

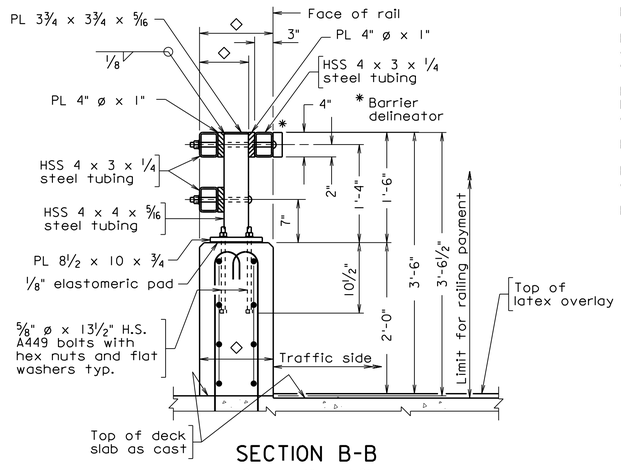

SECTION B-B
Scale: 1" = 1'-0"
Bolts through base plate shall be contained inside rebar cage

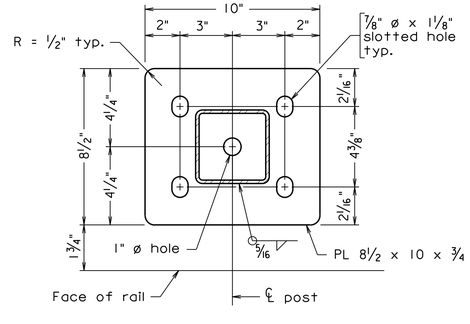

BASE PLATE DETAIL
Not to scale

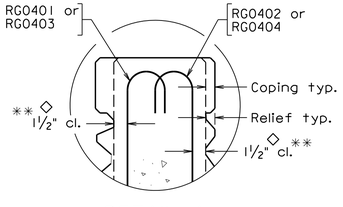

DETAIL A
Shown with architectural treatment on both sides

◇ For dimensions and architectural treatment details, see sheet 80. For minimum cover, see Detail A.

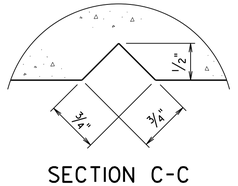

SECTION C-C
Full scale

Groove detail for both sides of rail

Notes:

Plan dimensions shown are measured in the respective horizontal and vertical planes.

The Contractor shall determine all dimensions and details necessary for installation.

All concrete shall be Low Shrinkage Class A4 Modified (Lightweight).

All bevels for concrete shall be 3/4".

All reinforcing steel shall be Corrosion Resistant Reinforcing Steel, Class II.

For details and reinforcing steel schedule of terminal wall, see sheet 79.

Posts and rail members shall be ASTM A500 Grade B steel. Plates shall be ASTM A36 steel. Steel pipe sleeves shall be ASTM A53.

Bolts for attaching rails to post are 3/4" diameter round head (with slot in head), ASTM A449. All other bolts shall be ASTM F3125 Grade A325 unless otherwise indicated in the details. Nuts shall be ASTM A563 Grade DH or ASTM A194 Grade 2H. Washers shall be ASTM F436.

For bolts attaching rails to posts, bolt extensions beyond nut shall be limited to the smaller of one and a half finishing turns or 1/4". If the extension is longer, excess shall be cut off and the edges of the bolt end ground so that no sharp edges remain. Cold galvanizing shall be applied to damaged galvanized areas.

All bolts shall be snug tightened.

All steel shall be hot dip galvanized.

Posts shall be equally spaced within a span. Maximum spacing is 6'-8".

Posts shall be seated on neoprene pads 1/8" minimum thickness, having a nominal durometer hardness of 60. Pads shall conform to post base dimensions.

Posts shall be vertical in transverse direction and normal to longitudinal profile grade. Cut bottom of posts to meet these configurations.

Rails to be continuous over a minimum of 3 posts before splicing.

Bid price for architectural treatment includes concrete in relief and coping.

For additional notes, see sheet 78.

** The cover tolerance referenced in the VDOT Road and Bridge Specifications as -0" to +1/2" is shifted to -1/4" to +1/4" for placement of the RG04 series bars.

REINFORCING STEEL SCHEDULE

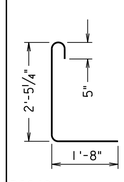

RG0401

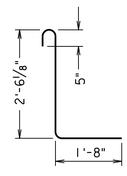

RG0402

Mark	Size	No.	Length	Pin ø	Location
RG0401	#4		4'-6 1/2"	3"	Parapet
RG0402	#4		4'-7 3/8"	3"	Parapet
RL04	#4			—	Parapet

Dimensions in bending diagram are out-to-out of bars.

CPSR-2-AT MOD. 10-31-2019 257-38A_077.dgn

COMMONWEALTH OF VIRGINIA
JEREMY SCHLUSSEL
Lic. No. 033974
PROFESSIONAL ENGINEER

Jeremy Schlussel
2022.07.08 18:43:03 -04'00'

WHITMAN REQUARDT & ASSOCIATES
RICHMOND, VA
STRUCTURAL ENGINEER

No.	Description	Date
	Revisions	

COMMONWEALTH OF VIRGINIA
DEPARTMENT OF TRANSPORTATION

STRUCTURE AND BRIDGE DIVISION

42"-CPSR RAILING WITH ARCHITECTURAL TREATMENT (CPSR-2-AT)

Designed: CAR
Drawn: CAR
Checked: MRD

Date	Plan No.	Sheet No.
July 2022	257-38A	77 of 125

Scale: 3/4" = 1'-0" unless otherwise noted.

© 2022, Commonwealth of Virginia

STATE	FEDERAL AID		STATE		SHEET NO.
	ROUTE	PROJECT	ROUTE	PROJECT	
VA.	—		95	0095-076-299, B688	78

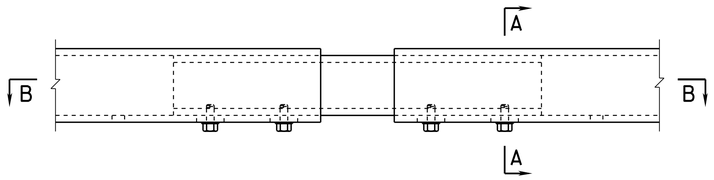

ELEVATION VIEW

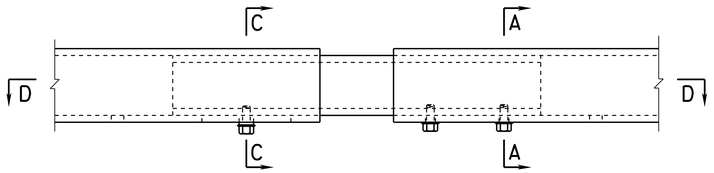

ELEVATION VIEW

Notes (cont'd):

Drain holes shall be ½" diameter and shall be provided in all rails approximately half-way between posts except at open joints near pier(s). Drain holes shall be provided at each end of rail.

Barrier delineator size, color, and spacing shall be in accordance with the Specifications.

Maximum spacing of grooves in pedestal shall be limited to 3 x post spacing, shall be centered between posts and shall be no closer than 10'-0" to ends of pedestal. Where deck slab is continuous over a pier, a groove in pedestal shall be provided at the pier.

Alternate details for inner sleeve rail fabrication and bolted connection to outer tube may be submitted, but only used if approved by the Structure and Bridge Division Engineering Services Program Area. No thru-bolt connections will be approved.

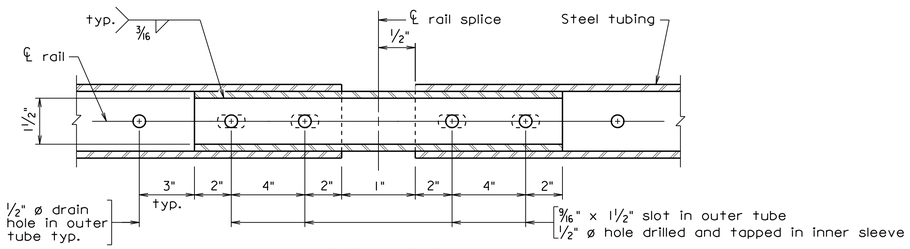

SECTION B-B

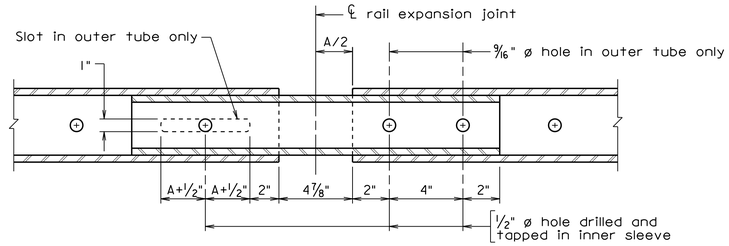

SECTION D-D

For details and dimensions not shown, see Section B-B.

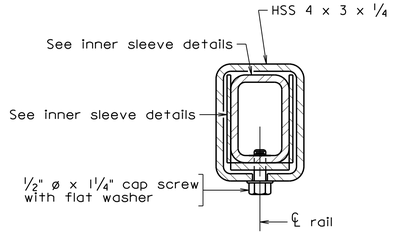

SECTION A-A
SECTION AT RAIL SPLICE

RAIL SPLICE DETAILS

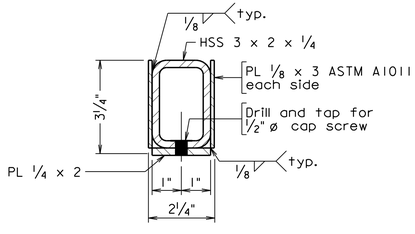

INNER SLEEVE DETAILS

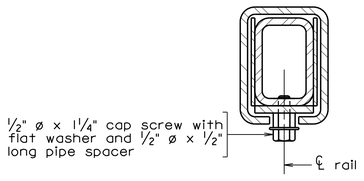

SECTION C-C
Details not shown similar to Section A-A.

RAIL EXPANSION JOINT DETAILS

CPSR-3

04-30-2021

257-38A_078.dgn

COMMONWEALTH OF VIRGINIA
JEREMY SCHLUSSEL
Lic. No. 033974
PROFESSIONAL ENGINEER

Jeremy Schlussel
2022.07.08 18:52:29 -04'00'

WHITMAN REQUARDT & ASSOCIATES
RICHMOND, VA
STRUCTURAL ENGINEER

Sealed and Signed by:
Junyi Meng
Lic. No. 033572
On the date of
April 30, 2021

A copy of the original sealed and signed standard drawing is on file in the Central Office.

VDOT S&B DIVISION
RICHMOND, VA
STRUCTURAL ENGINEER

Not to scale

© 2022, Commonwealth of Virginia

No.	Description	Date
	Revisions	

COMMONWEALTH OF VIRGINIA
DEPARTMENT OF TRANSPORTATION

STRUCTURE AND BRIDGE DIVISION

CPSR RAIL CONNECTIONS AND NOTES (CPSR-3)

Designed: CRR	Date	Plan No.	Sheet No.
Drawn: CRR	July 2022	257-38A	78 of 125
Checked: MRD			

STATE	FEDERAL AID		STATE		SHEET NO.
	ROUTE	PROJECT	ROUTE	PROJECT	
VA.	—		95	0095-076-299, B688	79

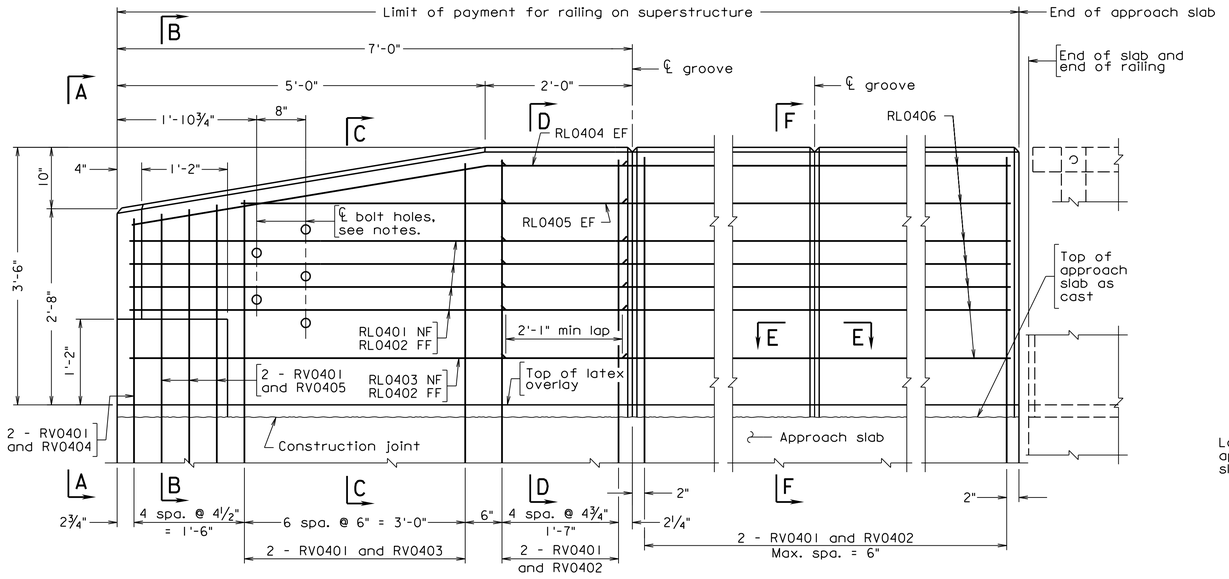

TERMINAL WALL ELEVATION

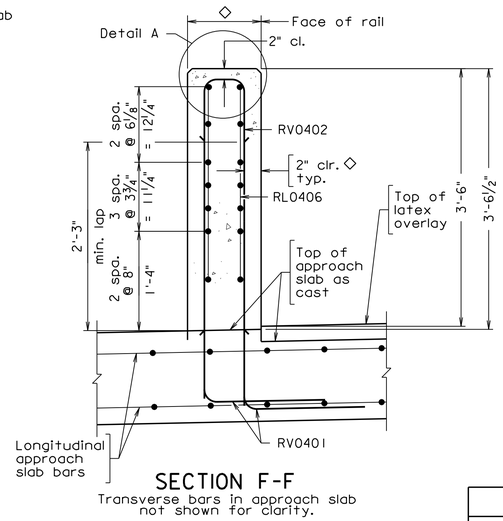

SECTION F-F
Transverse bars in approach slab not shown for clarity.

Notes:

Plan dimensions shown are measured in the respective horizontal and vertical planes.

The Contractor shall determine all dimensions and details necessary for installation.

All concrete shall be Low Shrinkage Class A4 Modified.

All bevels for concrete shall be ¾".

All reinforcing steel shall be Corrosion Resistant Reinforcing Steel, Class II.

For details and reinforcing steel schedule of railing, see sheet 77.

Each terminal wall shall be cast as one piece.

Terminal walls are detailed to take guardrail attachment for MGS.

Holes, where shown, shall be formed with sleeves of 1¼" diameter nominal pipe.

Spacing of grooves shall be approximately 8'-0".

Bid price for architectural treatment includes concrete in relief and coping.

REINFORCING STEEL SCHEDULE

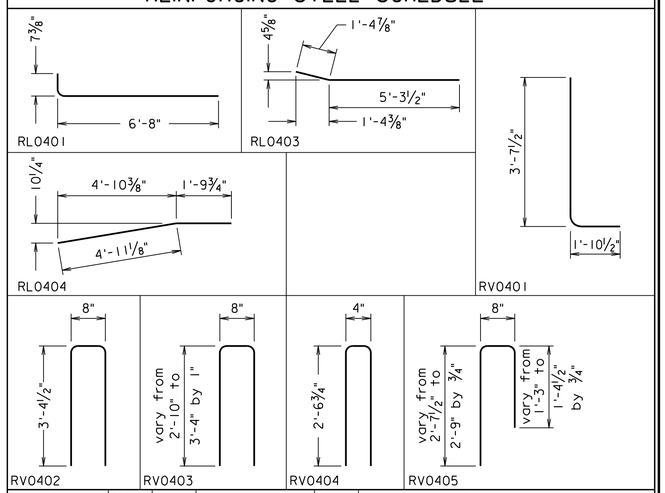

Mark	Size	No.	Length	Pin ø	Location
RL0401	#4		7'-2"	6"	Terminal wall
RL0402	#4		6'-8"	—	Terminal wall
RL0403	#4		6'-8½"	3"	Terminal wall
RL0404	#4		6'-9"	3"	Terminal wall
RL0405	#4		5'-2"	—	Terminal wall
RL0406	#4			—	Terminal wall
RV0401	#4		5'-4¾"	3"	Terminal wall and approach slab
RV0402	#4		7'-2½"	3"	Terminal wall
RV0403	#4		from 6'-1½" to 7'-1½"	3"	Terminal wall
RV0404	#4		5'-3"	3"	Terminal wall
RV0405	#4		from 4'-4" to 4'-7"	3"	Terminal wall

Dimensions in bending diagram are out-to-out of bars.

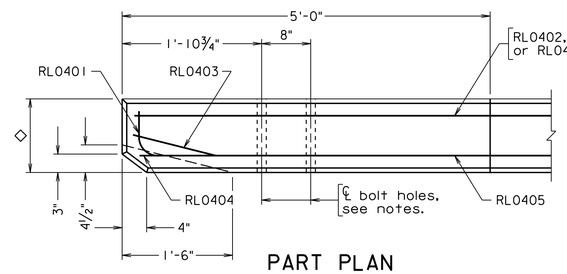

PART PLAN
RW04 series bars not shown for clarity

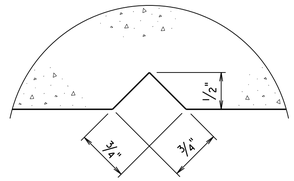

SECTION E-E
Full scale
Groove detail for both sides of rail

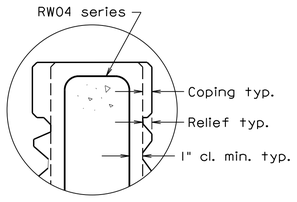

DETAIL A
Not to scale
Shown with architectural treatment on both sides

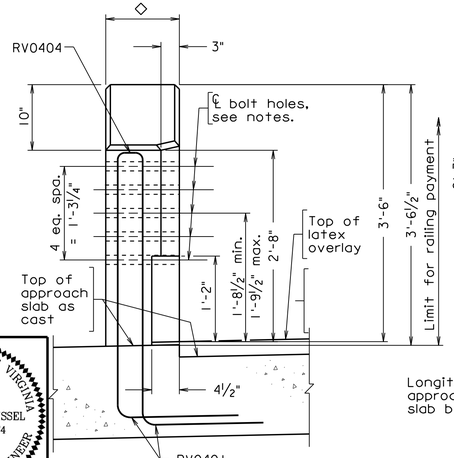

VIEW A-A
Showing RV04 bars only for clarity

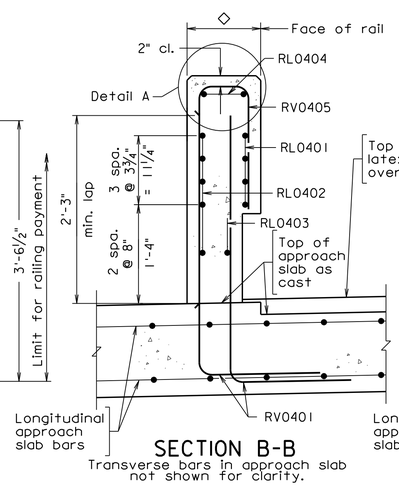

SECTION B-B
Transverse bars in approach slab not shown for clarity.

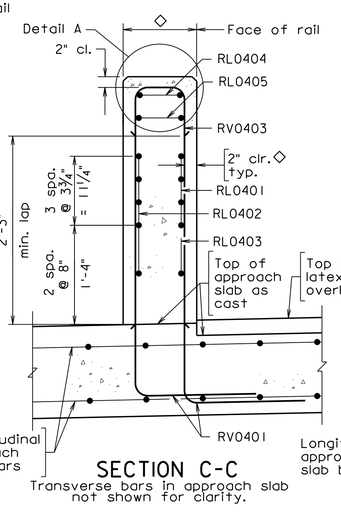

SECTION C-C
Transverse bars in approach slab not shown for clarity.

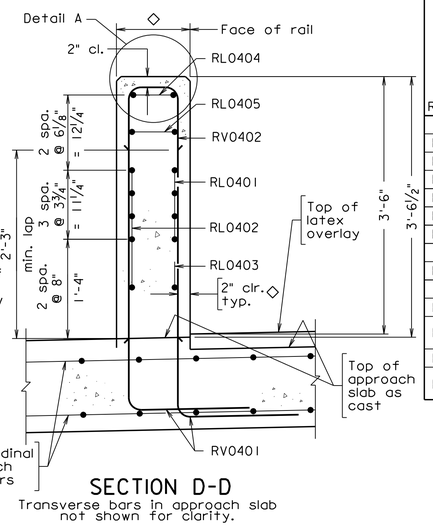

SECTION D-D
Transverse bars in approach slab not shown for clarity.

◇For dimensions and architectural treatment details, see sheet 80. For minimum cover, see Detail A.

CPSRT-1-AT MOD. 10-31-2019 257-38A_079.dgn

COMMONWEALTH OF VIRGINIA
JEREMY SCHLUSSEL
Lic. No. 033974
PROFESSIONAL ENGINEER
Jeremy Schlussel
2022.07.08 18:52:51 -04'00'
WHITMAN REQUARDT & ASSOCIATES
RICHMOND, VA
STRUCTURAL ENGINEER

No.	Description	Date
	Revisions	

COMMONWEALTH OF VIRGINIA
DEPARTMENT OF TRANSPORTATION
STRUCTURE AND BRIDGE DIVISION

42" CPSR TERMINAL WALL WITH ARCHITECTURAL TREATMENT (CPSRT-1-AT)

Designed: CRR
Drawn: CRR
Checked: MRD

Date	Plan No.	Sheet No.
July 2022	257-38A	79 of 125

Scale: 1" = 1'-0" unless otherwise noted.

© 2022, Commonwealth of Virginia

STATE	FEDERAL AID		STATE		SHEET NO.
	ROUTE	PROJECT	ROUTE	PROJECT	
VA.	—		95	0095-076-299, B688	79a

Notes:

Plan dimensions shown are measured in the respective horizontal and vertical planes.

The Contractor shall determine all dimensions and details necessary for installation.

All concrete shall be Low Shrinkage Class A4 Modified.

All bevels for concrete shall be ¾".

All reinforcing steel shall be Corrosion Resistant Reinforcing Steel, Class II.

For details and reinforcing steel schedule of BPF-6, see sheet 76.

Each terminal wall shall be cast as one piece.

Terminal walls are detailed to take guardrail attachment for MGS.

Holes, where shown, shall be formed with sleeves of 1¼" diameter nominal pipe.

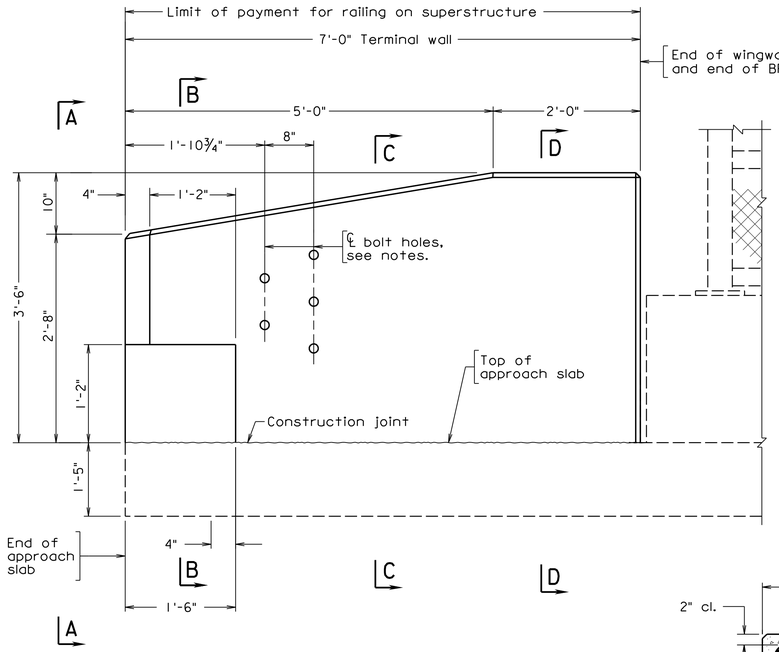

APPROACH SLAB EXTENSION
ABUTMENT B

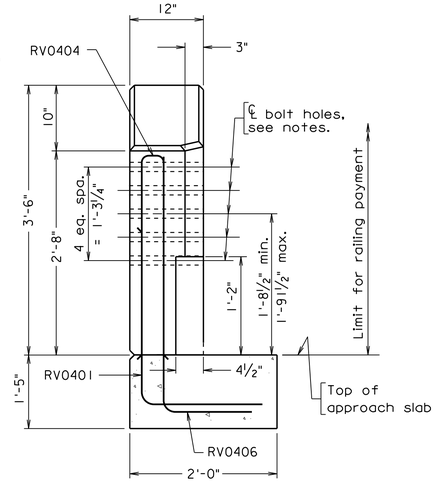

VIEW A-A
Showing RV04 bars only for clarity

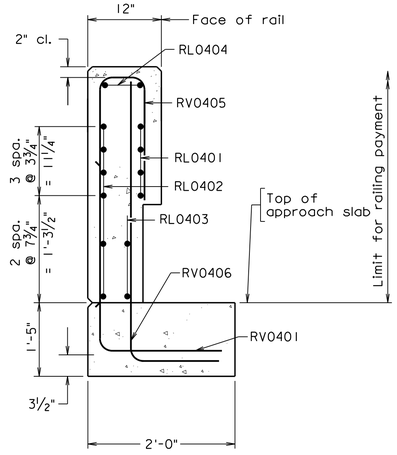

SECTION B-B

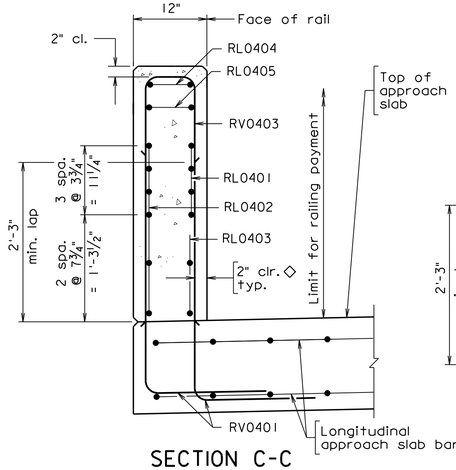

SECTION C-C
Transverse slab bar not shown for clarity

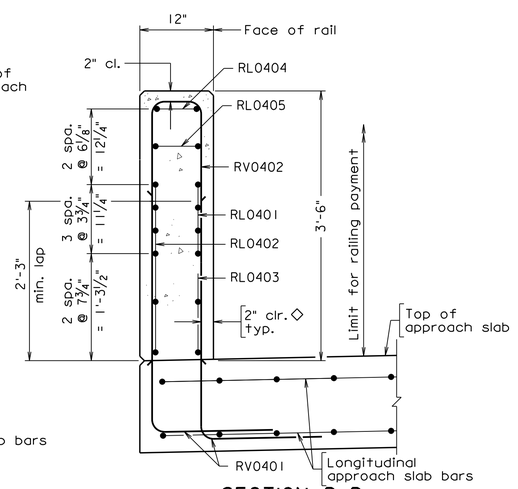

SECTION D-D
Transverse bars in approach slab and RL04 series extended from railing not shown for clarity

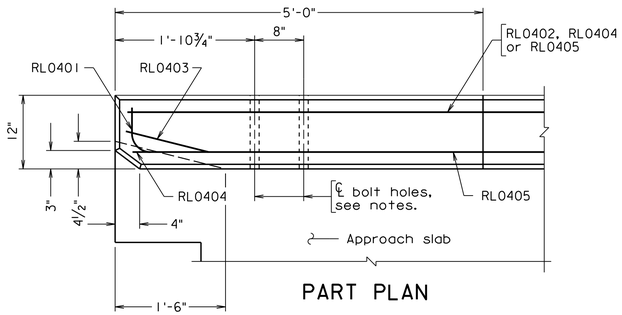

PART PLAN

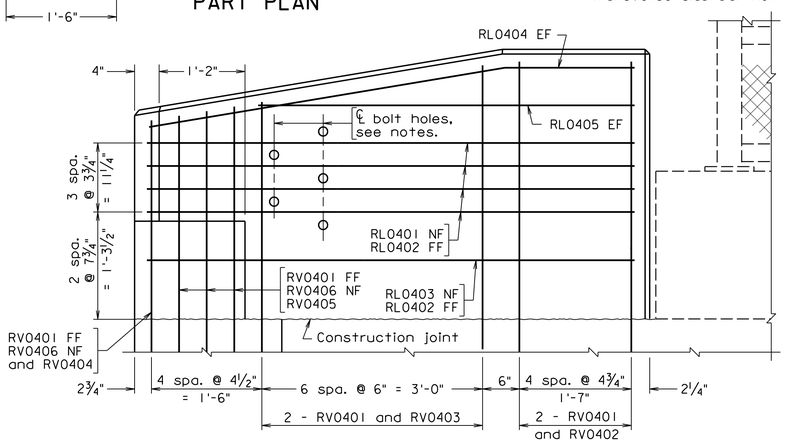

TERMINAL WALL- ELEVATION

REINFORCING STEEL SCHEDULE

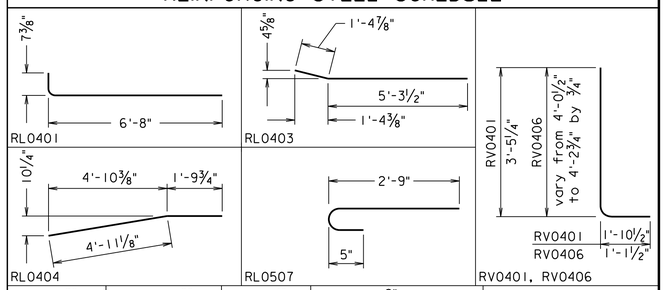

Mark	Size	No.	Pin ø	Length	Location
RL0401	#4		6"	7'-2"	Terminal wall
RL0402	#4		——	6'-8"	Terminal wall
RL0403	#4		3"	6'-8½"	Terminal wall
RL0404	#4		3"	6'-9"	Terminal wall
RL0405	#4		——	5'-2"	Terminal wall
RL0606	#6		——	4'-0"	Terminal wall end support
RL0507	#5		3¾"	3'-4"	Terminal wall end support
RS0401	#4		3"		Terminal wall end support
RV0401	#4		3"	4'-4"	Terminal wall
RV0402	#4		3"	7'-1½"	Terminal wall
RV0403	#4		3"	From 6'-0½" to 7'-0½"	Terminal wall
RV0404	#4		3"	5'-2"	Terminal wall
RV0405	#4		3"	From 4'-3½" to 4'-6½"	Terminal wall
RV0406	#4		3"	From 4'-3¼" to 4'-5½"	Terminal wall

Dimensions in bending diagram are out-to-out of bars.

JEREMY SCHLUSSEL
Lic. No. 033974
COMMONWEALTH OF VIRGINIA
PROFESSIONAL ENGINEER

Jeremy Schlussel
2022.07.08 18:50:34 -04'00'

WHITMAN REQUARDT & ASSOCIATES
RICHMOND, VA
STRUCTURAL ENGINEER

No.	Description	Date
	Revisions	

COMMONWEALTH OF VIRGINIA
DEPARTMENT OF TRANSPORTATION

STRUCTURE AND BRIDGE DIVISION

42" CPSR TERMINAL WALL WITH ARCHITECTURAL TREATMENT (CPSRT-4)

Designed: CRR	Date	Plan No.	Sheet No.
Drawn: CRR	July 2022	257-38A	79a of 125
Checked: MRD			

CPSRT-4 MOD. 04-30-2021 257-38A_079a.dgn

Scale: 1" = 1'-0" unless otherwise noted.

© 2022, Commonwealth of Virginia

STATE	FEDERAL AID		STATE		SHEET NO.
	ROUTE	PROJECT	ROUTE	PROJECT	
VA.	—		95	0095-076-299, B688	80

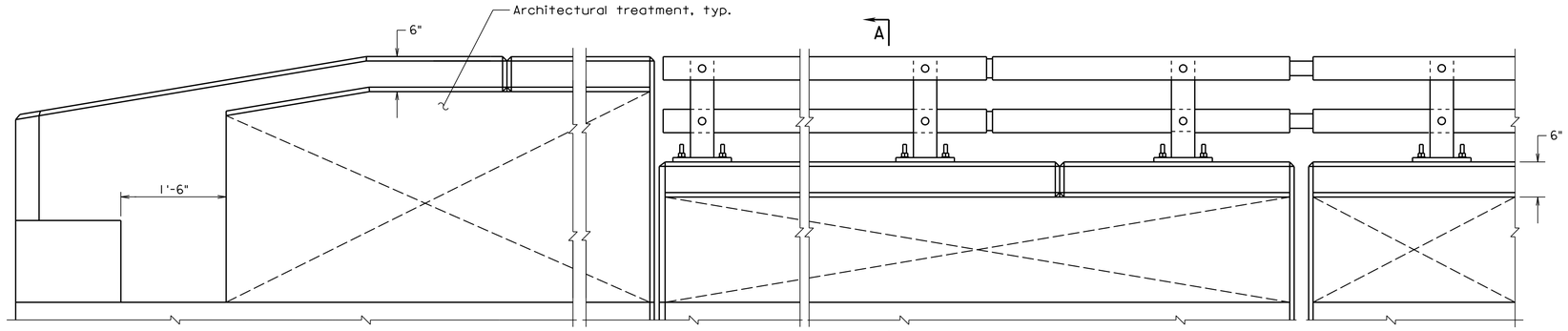

ELEVATION

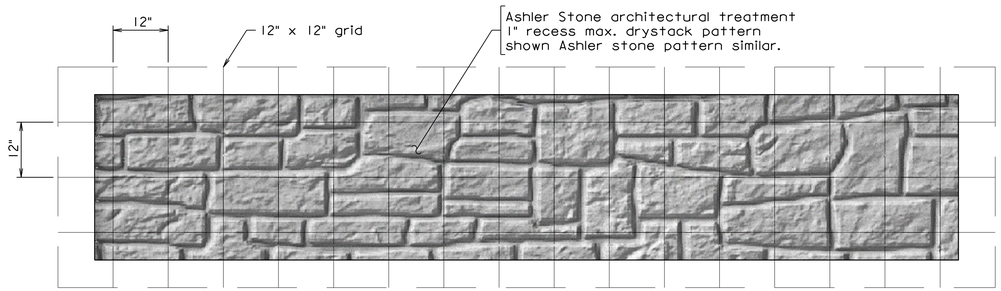

ASHLER STONE TEXTURE DETAIL
RAILING - INSIDE FACE
(outside face similar)

Notes:

Form liner shall be arranged to produce a continuous ashlar stone pattern without obvious repetition of the pattern.

Ashlar stone pattern shall be Customrock Pattern #12021 or an approved equal.

Form liner pattern shall be inspected and approved by the Department.

Details shown for a 8'-0" long form liner. Contractor shall submit shop drawings with pattern layout for approval by the Department.

Architectural treatment shall be applied on both faces of the barrier.

Width of terminal wall shall be equal to the width of the concrete pedestal of the railing in Section A-A.

Contractor may form a construction joint at a groove location or edge of an architectural treatment form where the form edge is located at least 1'-8" from the nearest post centerline.

For all other dimensions and details not shown, see sheets 77-79a.

Cost of architectural treatment for the barrier and terminal wall shall be included in the price bid for Architectural Treatment.

	Relief (in.)
r1	1
r2	1
r3	¾

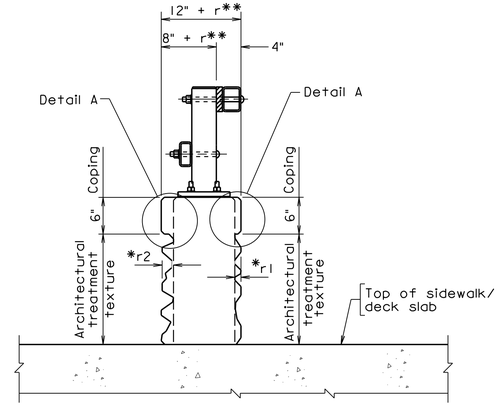

Both Faces

* r1 : relief on inside face is limited to 1"
r2 : relief on outside face is limited to 2"

SECTION A-A

** r = 0" for r2 ≤ 1"
r = 1" for 1" < r2 ≤ 2"

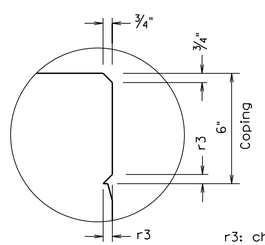

DETAIL A

r3: chamfer size, ¾" min.

Not to scale

© 2022, Commonwealth of Virginia

257-38A_080.dgn

10-31-2019

CPSR-AT-2

COMMONWEALTH OF VIRGINIA
JEREMY SCHLUSSEL
Lic. No. 033974
PROFESSIONAL ENGINEER

Jeremy Schlussel
2022.07.08 18:52:07 -04'00'

WHITMAN REQUARDT & ASSOCIATES
RICHMOND, VA
STRUCTURAL ENGINEER

Sealed and Signed by:
Junyi Meng
Lic. No. 033572
On the date of
October 31, 2019

A copy of the original sealed and signed standard drawing is on file in the Central Office.

VDOT S&B DIVISION
RICHMOND, VA
STRUCTURAL ENGINEER

No.	Description	Date
	Revisions	

COMMONWEALTH OF VIRGINIA
DEPARTMENT OF TRANSPORTATION

STRUCTURE AND BRIDGE DIVISION

ARCHITECTURAL TREATMENT FOR CPSR RAILING

Designed: CRR	Date	Plan No.	Sheet No.
Drawn: CRR	July 2022	257-38A	80 of 125
Checked: MRD			

STATE	FEDERAL AID		STATE		SHEET NO.
	ROUTE	PROJECT	ROUTE	PROJECT	
VA.	—		95	0095-076-299, B688	81

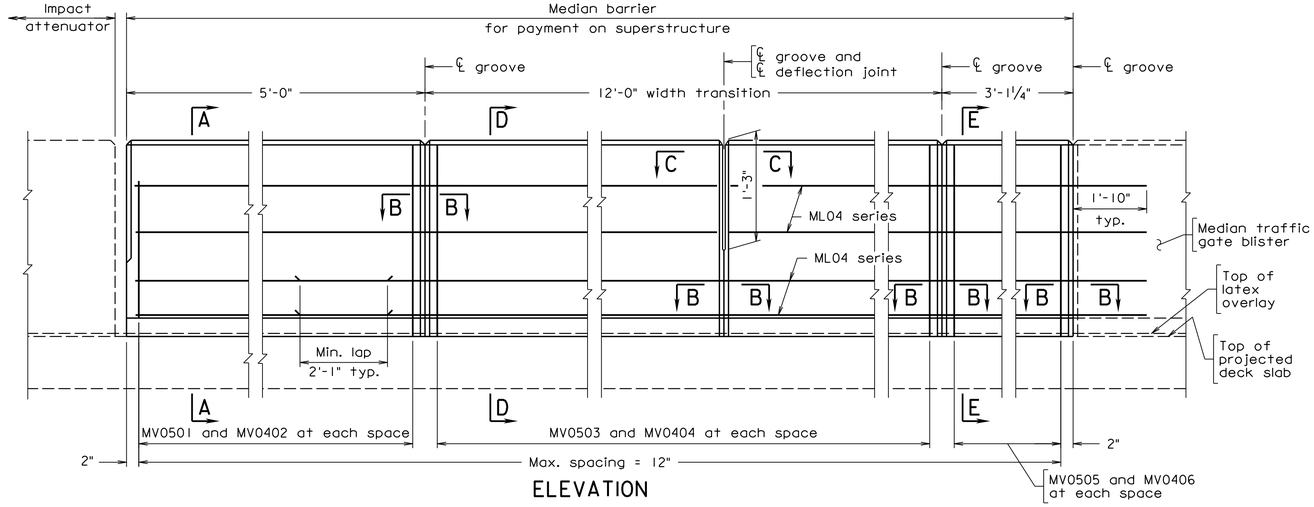

ELEVATION

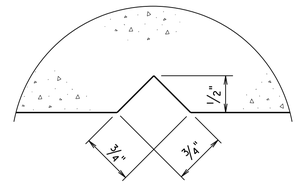

SECTION B-B
Full Scale
Groove detail for both sides of median barrier

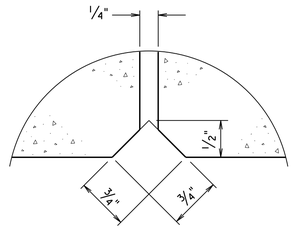

SECTION C-C
Full Scale
Deflection joint detail for both sides of median barrier

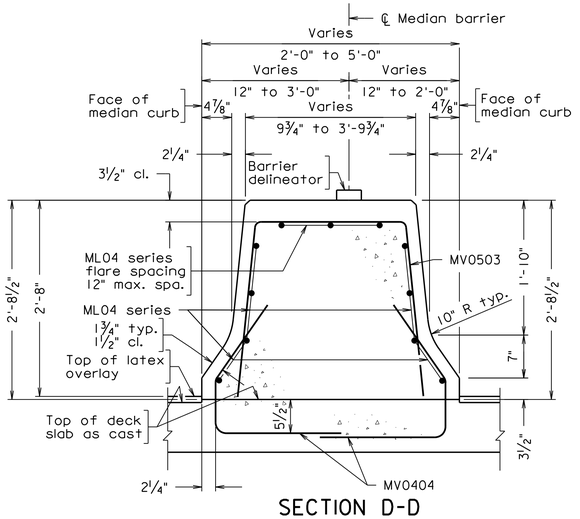

SECTION D-D

Barrier shown level. Median barrier is sloped to match bifurcation of median BPB-3A barriers.

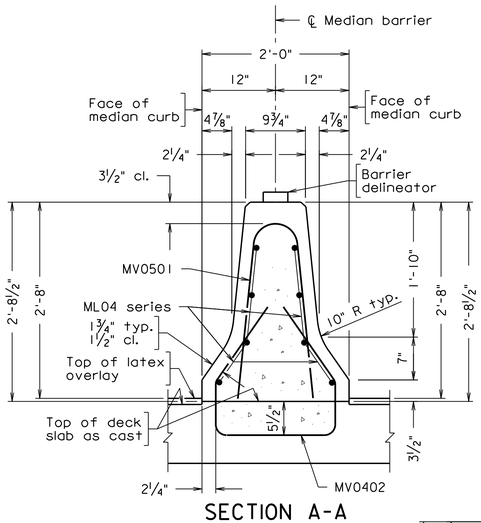

SECTION A-A

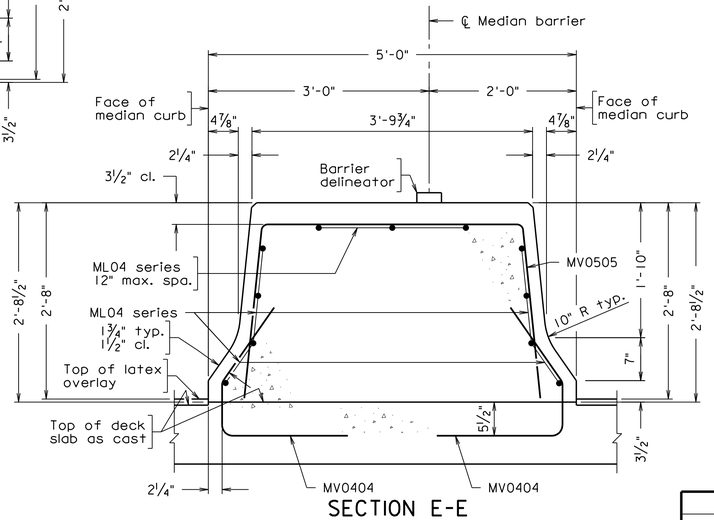

SECTION E-E

Barrier shown level. Median barrier is sloped to match bifurcation of median BPB-3A barriers.

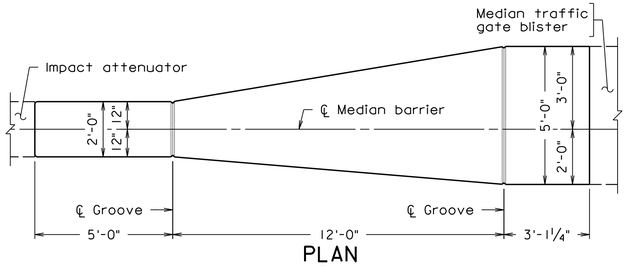

PLAN
Scale: ⅜" = 1'-0"

Notes:

Plan dimensions shown are measured in the respective horizontal and vertical planes.

The Contractor shall determine all dimensions and details necessary for installation.

All concrete shall be Low Shrinkage Class A4 Modified (Lightweight).

All bevels for concrete shall be ¾".

The reinforcing steel shown has been detailed based on a standard ¼" per foot cross slope and for an 8½" slab depth. The Contractor shall adjust the reinforcing steel as required for other cross slopes and slab depths.

All reinforcing bars shall be Corrosion Resistant Reinforcing Steel, Class II.

Use groove and deflection joint over pier.

Spacing of grooves shall be approximately 8'-0". Spacing of deflection joints shall not exceed three groove spaces.

Barrier Delineator size, color, and spacing shall be in accordance with the Specifications.

* Barrier height minimum shall match height from top of barrier to top of overlay. Reinforcing bar dimensions provided on this sheet account for ½" overlay thickness.

For median traffic gate blister details, see sheet 72.

REINFORCING STEEL SCHEDULE

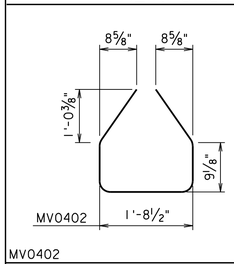

MV0402

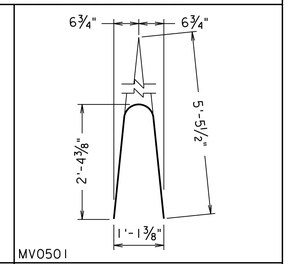

MV0501

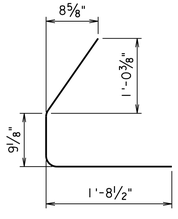

MV0404

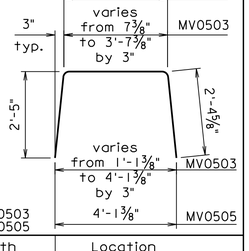

MV0503
MV0505

Mark	No.	Size	Pin ø	Length	Location
MV0501		#5	7"	5'-2"	Median barrier
MV0402		#4	3"	5'-5⅞"	Median barrier
MV0503		#5	3¾"	from 5'-2" to 8'-2"	Median barrier
MV0404		#4	3"	3'-7⅛"	Median barrier
MV0505		#5	3¾"	8'-2"	Median barrier
ML04		#4	—		Median barrier

Dimensions in bending diagram are out-to-out of bars, except as shown.

BMB-3A MOD. 10-31-2019

257-38A_081.dgn

COMMONWEALTH OF VIRGINIA
JEREMY SCHLUSSEL
Lic. No. 033974
PROFESSIONAL ENGINEER

Jeremy Schlussel
2022.07.08 18:49:01 -04'00'

WHITMAN REQUARDT & ASSOCIATES
RICHMOND, VA
STRUCTURAL ENGINEER

No.	Description	Date
	Revisions	

Scale: 1" = 1'-0" unless otherwise shown.

© 2022, Commonwealth of Virginia

COMMONWEALTH OF VIRGINIA
DEPARTMENT OF TRANSPORTATION

STRUCTURE AND BRIDGE DIVISION

CAST-IN-PLACE CONCRETE MEDIAN BARRIER (F-SHAPE) (BMB-3A)

Designed: CRR	Date	Plan No.	Sheet No.
Drawn: CRR	July 2022	257-38A	81 of 125
Checked: MRD			

STATE	FEDERAL AID		STATE		SHEET NO.
	ROUTE	PROJECT	ROUTE	PROJECT	
VA.	—		95	0095-076-299, B688	82

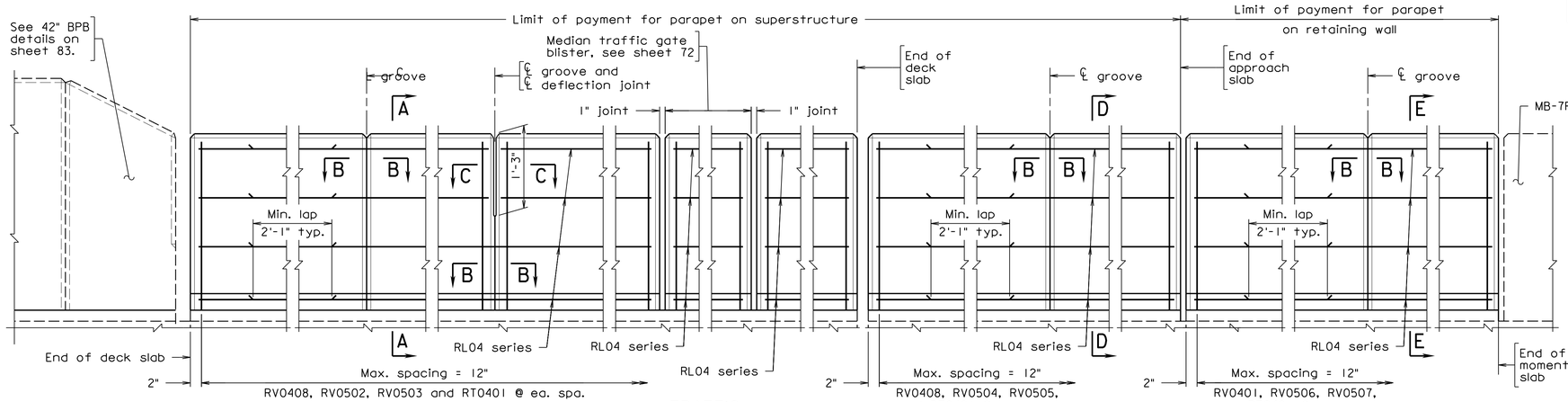

ABUTMENT A

TRAFFIC GATE BLISTER

APPROACH SLAB ABUTMENT B

MOMENT SLAB

ELEVATION

Notes:

Plan dimensions shown are measured in the respective horizontal and vertical planes.

The Contractor shall determine all dimensions and details necessary for installation.

All concrete shall be Low Shrinkage Class A4 Modified (lightweight) on bridge deck slab, Low Shrinkage Class A4 Modified on moment slab and approach slab.

All bevels for concrete shall be ¾".

The reinforcing steel shown has been detailed based on a standard ¼" per foot cross slope and for an 8½" slab depth. The Contractor shall adjust the reinforcing steel as required for other cross slopes and slab depths.

All reinforcing steel shall be Corrosion Resistant Reinforcing Steel, Class II.

Use groove and deflection joint over pier.

Spacing of grooves is to be approximately 8'-0". If lighting standard is used (see bridge conduit system), groove shall be located approximately 4'-0" from centerline of light standard. Spacing of deflection joints shall not exceed three groove spaces.

Barrier delineator size, color and spacing shall be in accordance with the Specifications.

For extruded parapets: During extrusion, if there are open joints at abutment(s) or pier(s), they shall be formed by the use of lubricated plates or other means so that uniformity of the opening and chamfers is maintained. Dimension of 1", as shown in Section thru Joints for Extrusion Only, is for additional deck slab that shall be cast at Contractor's expense. Dimension(s) to face of curb shall not be reduced.

Parapet (including terminal wall) shall not be extruded if pedestrian fencing will be attached.

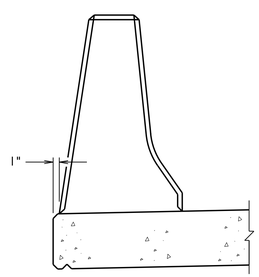

SECTION THRU JOINTS FOR EXTRUSION ONLY

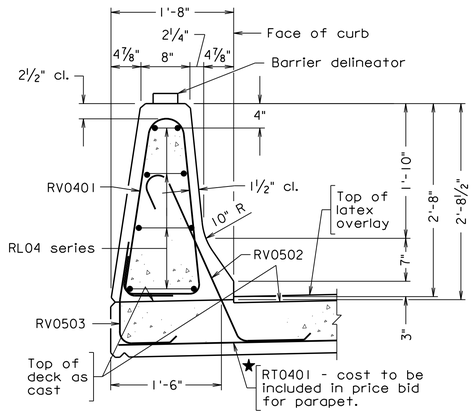

SECTION A-A

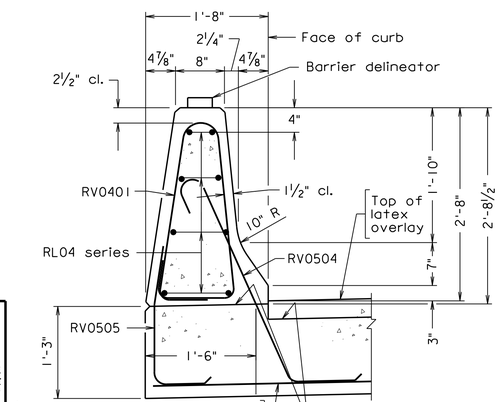

SECTION D-D

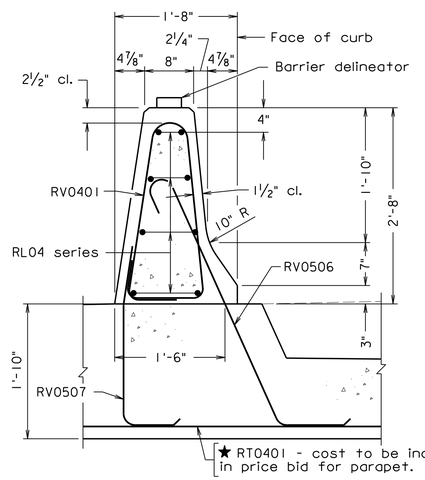

SECTION E-E

REINFORCING STEEL SCHEDULE

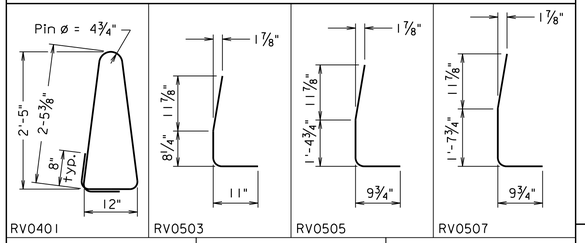

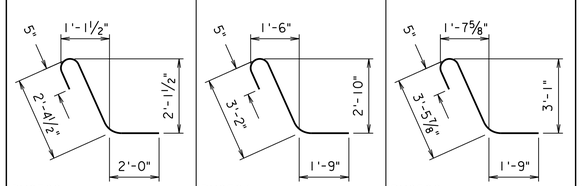

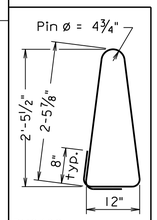

Mark	No.	Size	Pin ø	Length	Location
★RT0401		#4	—	3'-0"	Slab
RV0401		#4	3"	7'-3"	Parapet
RV0502		#5	3¾"	4'-10½"	Parapet
RV0503		#5	3¾"	2'-5¾"	Parapet
RV0504		#5	3¾"	5'-5"	Parapet
RV0505		#5	3¾"	3'-1"	Parapet
RV0506		#5	3¾"	5'-9"	Parapet
RV0507		#5	3¾"	3'-4"	Parapet
RV0408		#4	3"	7'-4"	Parapet
RL04		#4	—		Parapet

Dimensions in bending diagram are out-to-out of bars, except as shown.

Gross concrete quantities (C.Y.) = Lin. Ft. x 0.105
All concrete above roadway slab

★ Used only when deck transverse reinforcement is parallel to skew of bridge. And shall be placed perpendicular to face of barrier along curves.

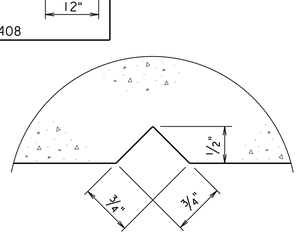

SECTION B-B
Full scale
Groove detail for both sides of parapet

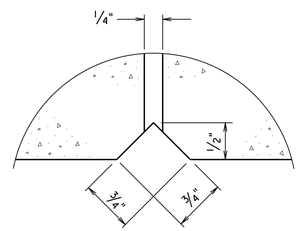

SECTION C-C
Full scale
Deflection joint detail for both sides of parapet

MOD. 10-31-2019 257-38A_082.dgn

BPB-3A

COMMONWEALTH OF VIRGINIA
JEREMY SCHLUSSEL
Lic. No. 033974
PROFESSIONAL ENGINEER

Jeremy Schlussel
2022.07.08 18:48:20 -04'00'

WHITMAN REQUARDT & ASSOCIATES
RICHMOND, VA
STRUCTURAL ENGINEER

Scale: 1" = 1'-0" unless otherwise shown.

© 2022. Commonwealth of Virginia

No.	Description	Date
	Revisions	

COMMONWEALTH OF VIRGINIA
DEPARTMENT OF TRANSPORTATION

STRUCTURE AND BRIDGE DIVISION

CAST-IN-PLACE CONCRETE PARAPET (F-SHAPE) (BPB-3A)

Designed: CRR	Date	Plan No.	Sheet No.
Drawn: CRR	July 2022	257-38A	82 of 125
Checked: MRD			

STATE	FEDERAL AID		STATE		SHEET NO.
	ROUTE	PROJECT	ROUTE	PROJECT	
VA.	—		95	0095-076-299, B688	82a

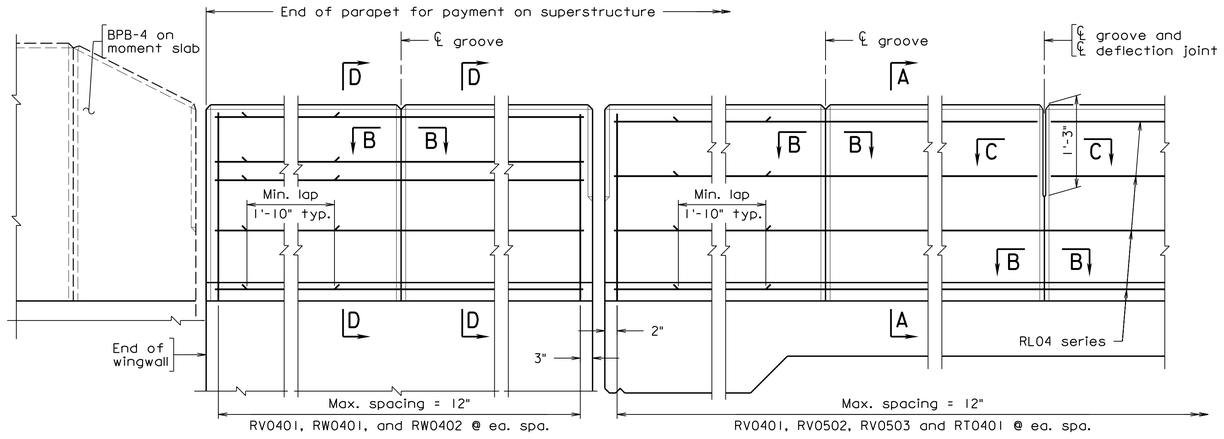

U-BACK WING

DECK SLAB EXTENSION ABUTMENT C

ELEVATION

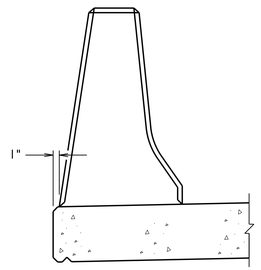

SECTION THRU JOINTS FOR EXTRUSION ONLY

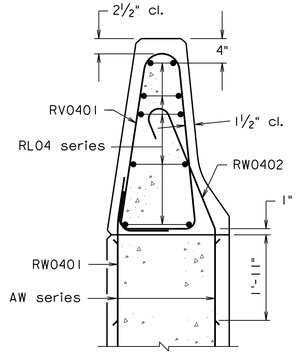

SECTION D-D

Holes and bolts not shown. For details not shown, see Section A-A.

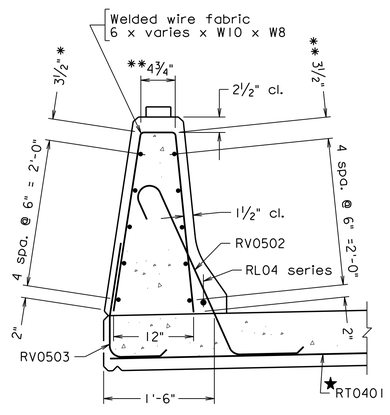

**Dimensions are out-to-out of wires.

SECTION A-A
ALTERNATE REINFORCING STEEL

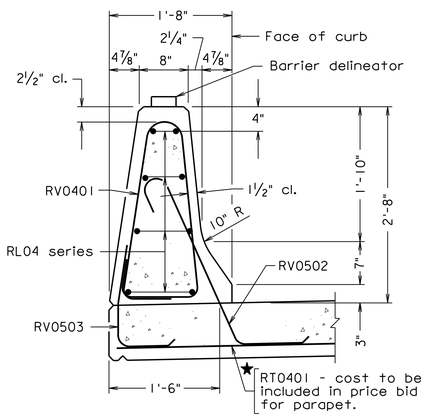

SECTION A-A

REINFORCING STEEL SCHEDULE

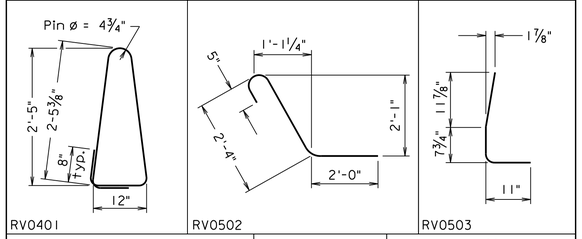

Mark	No.	Size	Pin ø	Length	Location
★RT0401		#4	—	3'-0"	Slab
RV0401		#4	3"	7'-3"	Parapet
RV0502		#5	3¾"	4'-10"	Parapet
RV0503		#5	3¾"	2'-5¼"	Parapet
RV0401		#4	3"	2'-0"	Parapet
RV0401		#4	3"	4'-3"	Parapet
RL04		#4	—		Parapet

Dimensions in bending diagram are out-to-out of bars, except as shown.

Gross concrete quantities (C.Y.) = Lin. Ft. x 0.105
All concrete above roadway slab

★ Used only when deck transverse reinforcement is parallel to skew of bridge

Notes:

Plan dimensions shown are measured in the respective horizontal and vertical planes.

The Contractor shall determine all dimensions and details necessary for installation.

All concrete shall be Low Shrinkage Class A4 Modified (lightweight) on bridge deck slab and approach slab. Low Shrinkage Class A4 Modified on moment slab.

All bevels for concrete shall be ¾".

The reinforcing steel shown has been detailed based on a standard ¼" per foot cross slope and for an 8½" slab depth. The Contractor shall adjust the reinforcing steel as required for other cross slopes and slab depths.

All reinforcing steel shall be Corrosion Resistant Reinforcing Steel, Class II.

Use groove and deflection joint over pier.

Spacing of grooves is to be approximately 8'-0". If lighting standard is used (see bridge conduit system), groove shall be located approximately 4'-0" from centerline of light standard. Spacing of deflection joints shall not exceed three groove spaces.

Barrier delineator size, color and spacing shall be in accordance with the Specifications.

For extruded parapets: During extrusion, if there are open joints at abutment(s) or pier(s), they shall be formed by the use of lubricated plates or other means so that uniformity of the opening and chamfers is maintained. Dimension of 1", as shown in Section thru Joints for Extrusion Only, is for additional deck slab that shall be cast at Contractor's expense. Dimension(s) to face of curb shall not be reduced.

Parapet (including terminal wall) shall not be extruded if pedestrian fencing will be attached.

For details and reinforcing steel schedule of terminal wall, see sheet 83.

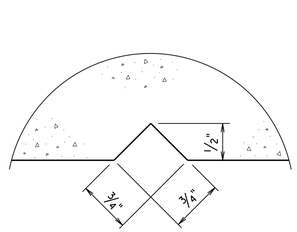

SECTION B-B
Full scale
Groove detail for both sides of parapet

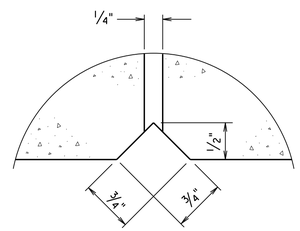

SECTION C-C
Full scale
Deflection joint detail for both sides of parapet

BPB-3A MOD. 10-31-2019 257-38A_082a.dgn

COMMONWEALTH OF VIRGINIA
JEREMY SCHLUSSEL
Lic. No. 033974
PROFESSIONAL ENGINEER

Jeremy Schlussel
2022.07.08 18:47:53 -04'00'

WHITMAN REQUARDT & ASSOCIATES
RICHMOND, VA
STRUCTURAL ENGINEER

Scale: 1" = 1'-0" unless otherwise shown.

© 2022. Commonwealth of Virginia

No.	Description	Date
	Revisions	

COMMONWEALTH OF VIRGINIA
DEPARTMENT OF TRANSPORTATION

STRUCTURE AND BRIDGE DIVISION

CAST-IN-PLACE CONCRETE PARAPET (F-SHAPE) ABUTMENT C (BPB-3A)

Designed: CRR	Date	Plan No.	Sheet No.
Drawn: CRR			
Checked: MRD	July 2022	257-38A	82a of 125

STATE	FEDERAL AID		STATE		SHEET NO.
	ROUTE	PROJECT	ROUTE	PROJECT	
VA.	—		95	0095-076-299, B688	82b

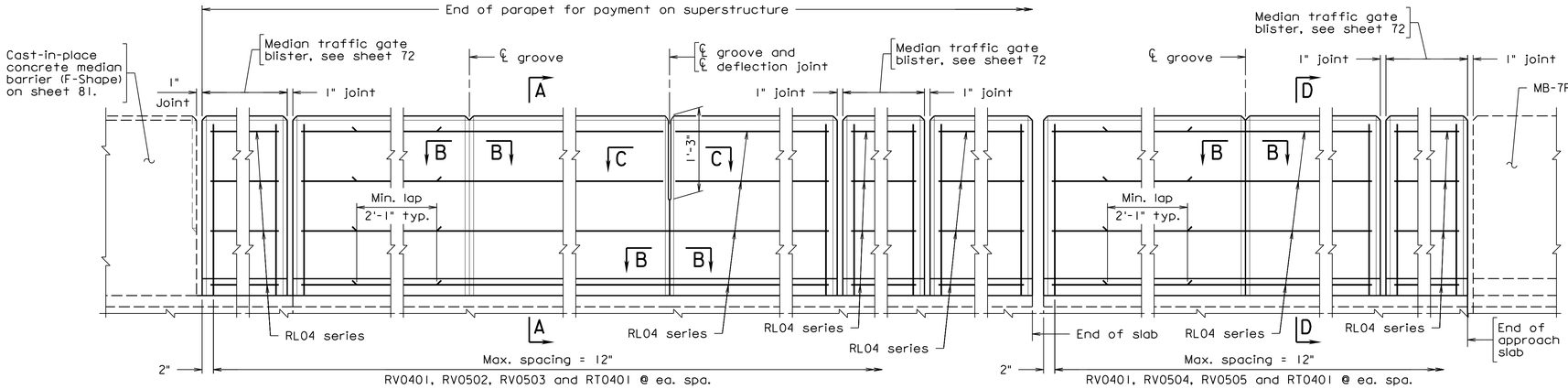

MEDIAN TRAFFIC GATE BLISTER

MEDIAN TRAFFIC GATE BLISTER

APPROACH SLAB ABUTMENT B

ELEVATION

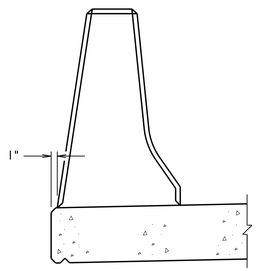

SECTION THRU JOINTS FOR EXTRUSION ONLY

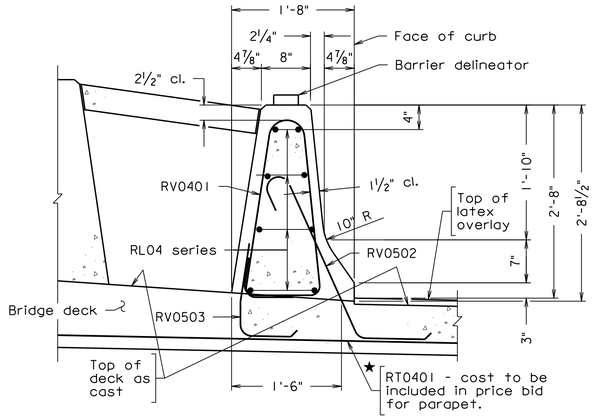

SECTION A-A

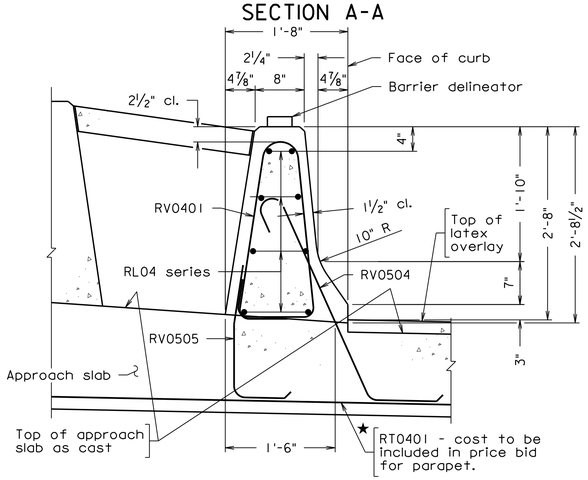

SECTION D-D

REINFORCING STEEL SCHEDULE

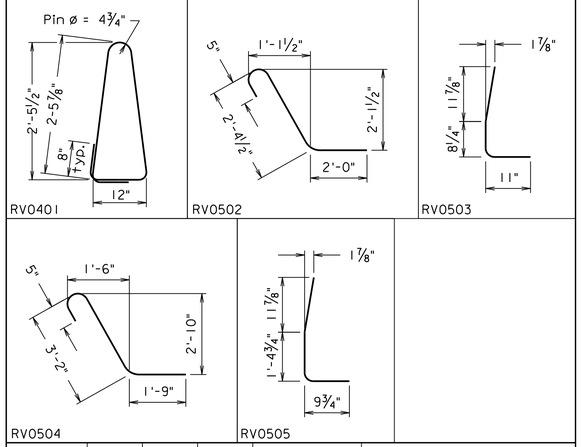

Mark	No.	Size	Pin ø	Length	Location
★RT0401		#4	—	3'-0"	Slab
RV0401		#4	3"	7'-4"	Parapet
RV0502		#5	3¾"	4'-10½"	Parapet
RV0503		#5	3¾"	2'-5¾"	Parapet
RV0504		#5	3¾"	5'-5"	Parapet
RV0505		#5	3¾"	3'-1"	Parapet
RL04		#4	—		Parapet

Dimensions in bending diagram are out-to-out of bars, except as shown.

Gross concrete quantities (C.Y.) = Lin. Ft. x 0.105
All concrete above roadway slab

★ Used only when deck transverse reinforcement is parallel to skew of bridge. And shall be placed perpendicular to face of barrier along curves.

Notes:

Plan dimensions shown are measured in the respective horizontal and vertical planes.

The Contractor shall determine all dimensions and details necessary for installation.

All concrete shall be Low Shrinkage Class A4 Modified (lightweight) on bridge deck slab and approach slab.

All bevels for concrete shall be ¾".

The reinforcing steel shown has been detailed based on a standard ¼" per foot cross slope and for an 8½" slab depth. The Contractor shall adjust the reinforcing steel as required for other cross slopes and slab depths.

All reinforcing steel shall be Corrosion Resistant Reinforcing Steel, Class II.

Use groove and deflection joint over pier.

Spacing of grooves is to be approximately 8'-0". If lighting standard is used (see bridge conduit system), groove shall be located approximately 4'-0" from centerline of light standard. Spacing of deflection joints shall not exceed three groove spaces.

Barrier delineator size, color and spacing shall be in accordance with the Specifications.

For extruded parapets: During extrusion, if there are open joints at abutment(s) or pier(s), they shall be formed by the use of lubricated plates or other means so that uniformity of the opening and chamfers is maintained. Dimension of 1", as shown in Section thru Joints for Extrusion Only, is for additional deck slab that shall be cast at Contractor's expense. Dimension(s) to face of curb shall not be reduced.

Parapet (including terminal wall) shall not be extruded if pedestrian fencing will be attached.

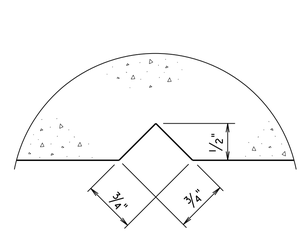

SECTION B-B
Full scale
Groove detail for both sides of parapet

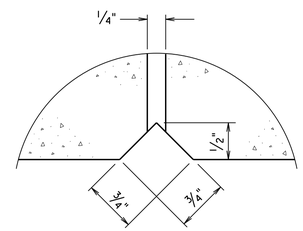

SECTION C-C
Full scale
Deflection joint detail for both sides of parapet

BPB-3A MOD. 10-31-2019 257-38A_082b.dgn

COMMONWEALTH OF VIRGINIA
JEREMY SCHLUSSEL
Lic. No. 033974
PROFESSIONAL ENGINEER

Jeremy Schlussel
2022.07.08 18:48:40 -04'00'

WHITMAN REQUARDT & ASSOCIATES
RICHMOND, VA
STRUCTURAL ENGINEER

No.	Description	Date
	Revisions	

COMMONWEALTH OF VIRGINIA
DEPARTMENT OF TRANSPORTATION

STRUCTURE AND BRIDGE DIVISION

CAST-IN-PLACE CONCRETE PARAPET (F-SHAPE) MEDIAN (BPB-3A)

Designed: CRR	Date	Plan No.	Sheet No.
Drawn: CRR	July 2022	257-38A	82b of 125
Checked: MRD			

Scale: 1" = 1'-0" unless otherwise shown.

© 2022, Commonwealth of Virginia

STATE	FEDERAL AID		STATE		SHEET NO.
	ROUTE	PROJECT	ROUTE	PROJECT	
VA.	—		95	0095-076-299, B688	83

Notes:

Plan dimensions shown are measured in the respective horizontal and vertical planes.

The Contractor shall determine all dimensions and details necessary for installation.

All concrete shall be Low Shrinkage Class A4 Modified.

All chamfers for concrete shall be ¾".

All reinforcing steel shall be Corrosion Resistant Reinforcing Steel, Class II.

Each terminal wall shall be cast as one piece.

Barrier delineator size, color and spacing shall be in accordance with the Specifications.

Terminal sections are detailed to take guardrail attachment GR-FOA-5.

Holes, where shown, shall be formed with sleeves of 1¼" diameter nominal pipe.

Spacing of grooves for U-back wings shall be approximately 8'-0".

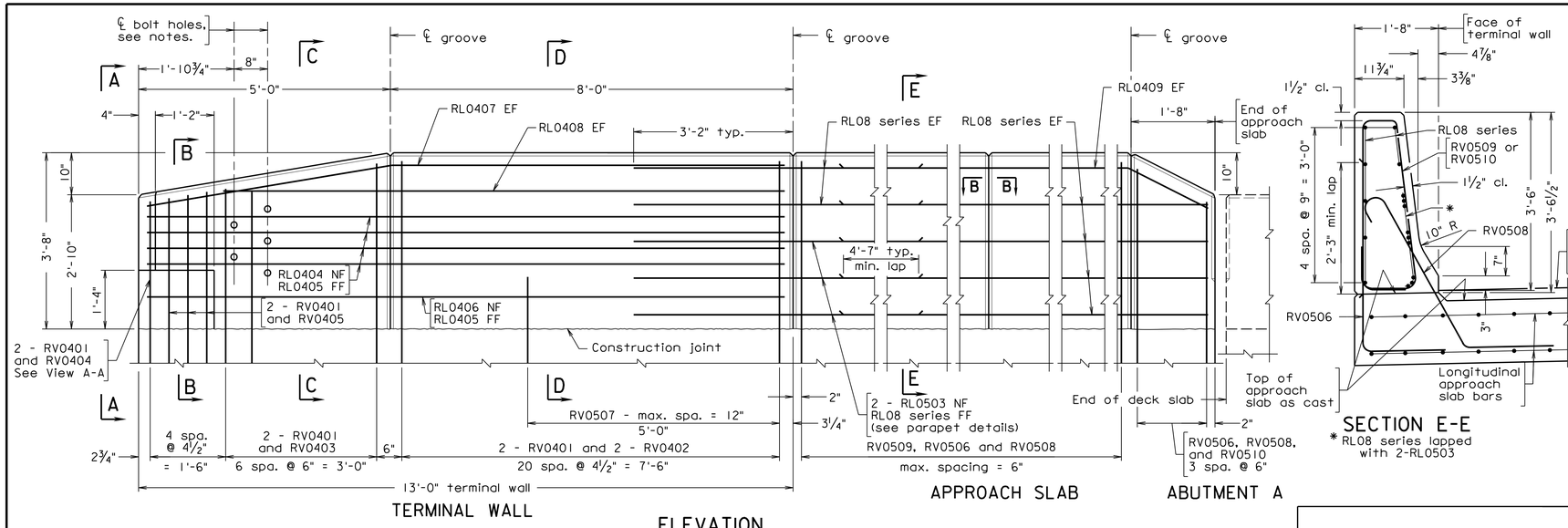

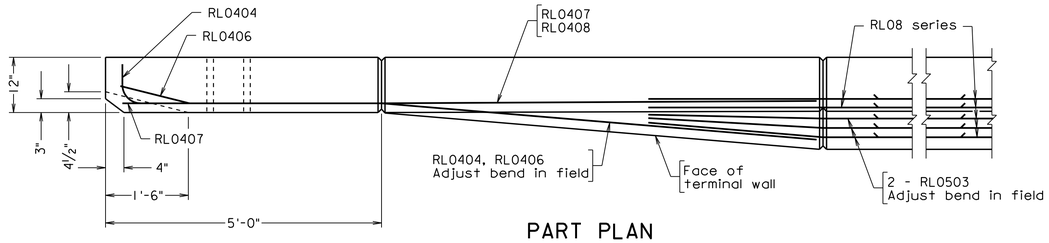

Only RL series reinforcement in the NF of the terminal section shown
Chamfer omitted for clarity

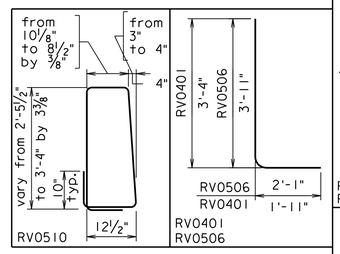

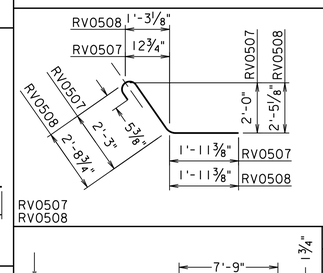

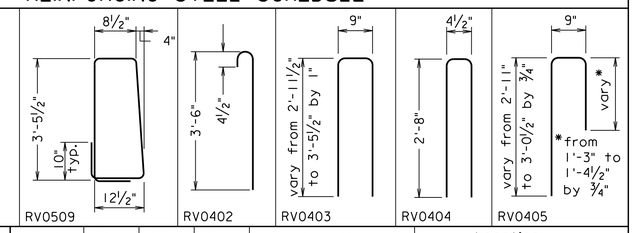

Mark	No.	Size	Pin ø	Length	Location
RV0401		#4	3"	5'-1¾"	Terminal wall/approach slab
RV0402		#4	3"	4'-0"	Terminal wall
RV0403		#4	3"	from 6'-6" to 7'-6"	Terminal wall
RV0404		#4	2"	5'-7"	Terminal wall
RV0405		#4	3"	from 4'-7" to 4'-10"	Terminal wall
RV0506		#5	3¾"	5'-10⅜"	Approach slab
RV0507		#5	3¾"	4'-9¼"	Terminal wall/approach slab
RV0508		#5	3¾"	5'-3"	Approach slab
RV0509		#5	3¾"	9'-9"	Approach slab
RV0510		#5	3¾"	from 8'-2" to 9'-9"	Approach slab
RL0503		#5	3¾"	8'-0"	Terminal wall/approach slab
RL0404		#4	6"	13'-0"	Terminal wall
RL0405		#4	—	12'-8"	Terminal wall
RL0406		#4	3"	12'-8"	Terminal wall
RL0407		#4	3"	12'-9"	Terminal wall
RL0408		#4	—	11'-5"	Terminal wall
RL0409		#4	3"	9'-7"	Approach slab
RL08		#8	—		Terminal wall/approach slab

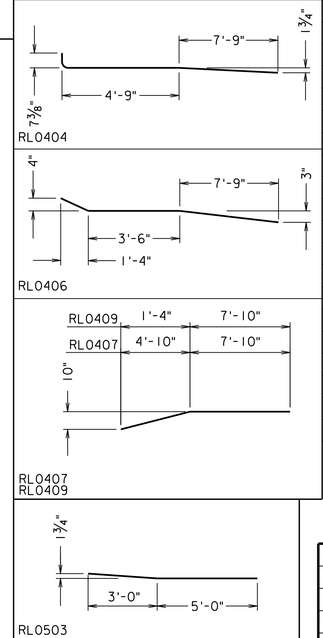

Dimensions in bending diagram are out-to-out of bars.

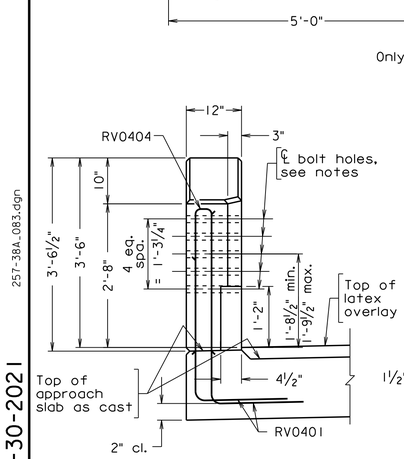

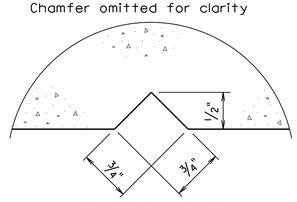

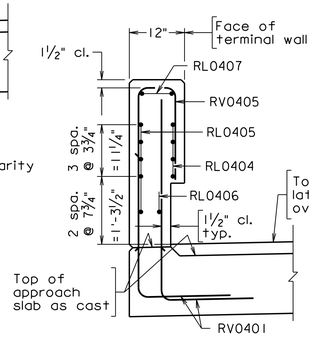

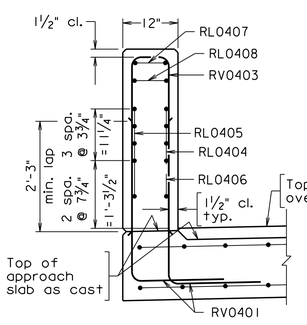

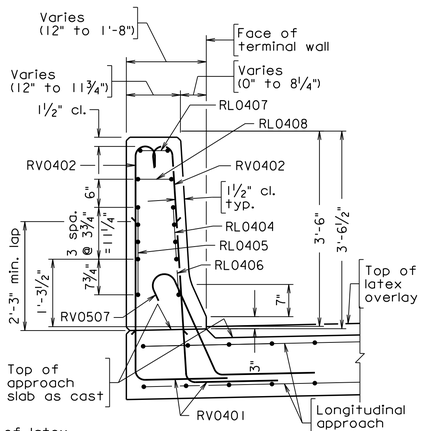

Scale: ¾" = 1'-0"

© 2022, Commonwealth of Virginia

257-38A.083.dgn

MOD. 04-30-2021

BPBT-4A

WHITMAN REQUARDT & ASSOCIATES
RICHMOND, VA
STRUCTURAL ENGINEER

No.	Description	Date
	Revisions	

COMMONWEALTH OF VIRGINIA
DEPARTMENT OF TRANSPORTATION

STRUCTURE AND BRIDGE DIVISION

42" BPB TERMINAL WALL (BPBT-4A)

Designed: CRR	Date	Plan No.	Sheet No.
Drawn: CRR	July 2022	257-38A	83 of 125
Checked: MRD			

STATE	FEDERAL AID		STATE		SHEET NO.
	ROUTE	PROJECT	ROUTE	PROJECT	
VA.	—		95	0095-076-299, B688	84

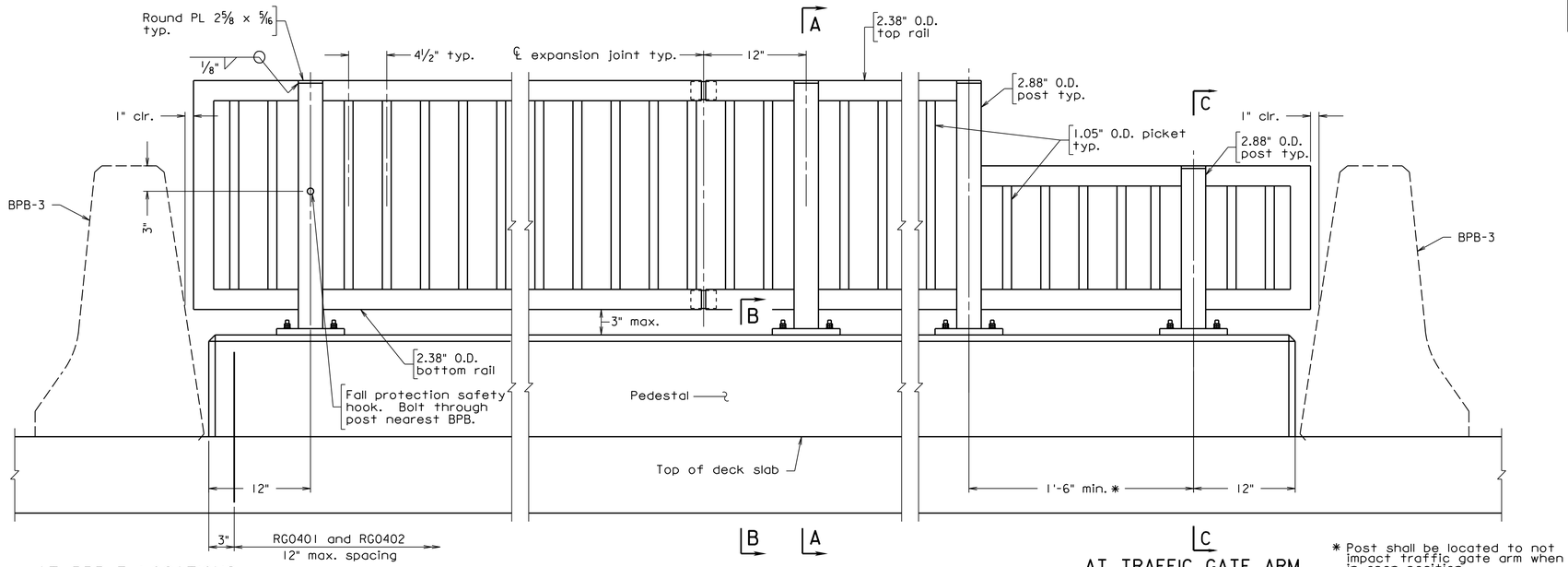

AT BPB-3 LOCATIONS

ELEVATION

Scale: 1½" = 1'-0"

AT TRAFFIC GATE ARM

(located where traffic gate arm is in open position)

* Post shall be located to not impact traffic gate arm when in open position.

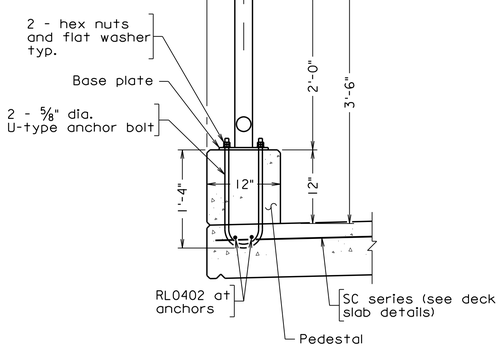

SECTION A-A

Scale: 1" = 1'-0"

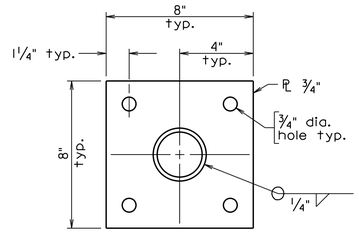

BASE PLATE DETAIL

Scale: 3" = 1'-0"

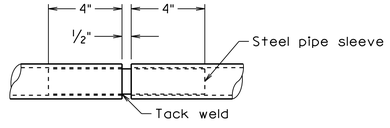

TYPICAL EXPANSION JOINT DETAIL

FOR TOP/BOTTOM RAIL AND GRIPPING HANDRAIL

Scale: 3" = 1'-0"

Notes:

Posts shall be set vertical. Rails shall be set parallel to the top of pedestal.

Posts shall be equally spaced, not to exceed 6'-0".

Rail expansion joints shall be provided at intervals not exceeding 30'-0" and at all panels spanning deck expansion joints. Rails shall be continuous over a minimum of 3 posts before splicing.

Anchor bolts shall be high-strength and shall be galvanized.

Threaded rods shall be ASTM A307 and shall be galvanized.

Plates shall be ASTM A709, Grade 36 and shall be galvanized.

All posts, rails, pickets and pipes shall be welded or seamless steel galvanized pipe conforming to ASTM F1083 schedule 40, except gripping handrail shall be schedule 80.

Railing shall be grounded in accordance with Section 410 of the Specifications.

All concrete shall be Low Shrinkage Class A4 Modified (lightweight).

Chamfers for concrete shall be ¾".

All reinforcing steel shall be Corrosion Resistant Reinforcing Steel, Class II.

REINFORCING STEEL SCHEDULE

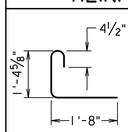

RG0401

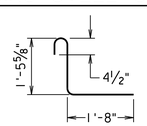

RG0402

Mark	Size	No.	Length	Pin ø	Location
RG0401	#4		3'-5⅜"	3"	Pedestal/deck slab
RG0402	#4		3'-6⅜"	3"	Pedestal/deck slab
RL04	#4			—	Pedestal
RL0402	#4		1'-6"	—	Deck slab

Dimensions in bending diagram are out-to-out of bars.

Contractor shall determine number and lengths necessary for installation.

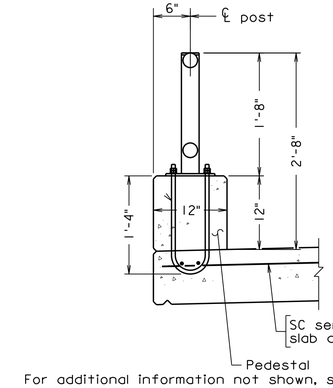

SECTION C-C

For additional information not shown, see Section A-A.

Scale: 1" = 1'-0"

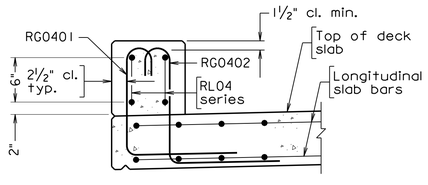

SECTION B-B

Transverse rebars in deck slab not shown for clarity

Scale: 1" = 1'-0"

BPR-1 MOD. 04-30-2021

257-38A_084.dgn

JEREMY SCHLUSSEL
Lic. No. 033974
COMMONWEALTH OF VIRGINIA
PROFESSIONAL ENGINEER

Jeremy Schlussel
2022.07.08 18:46:32 -04'00'

WHITMAN REQUARDT & ASSOCIATES
RICHMOND, VA
STRUCTURAL ENGINEER

Scale as noted

© 2022, Commonwealth of Virginia

No.	Description	Date
	Revisions	

COMMONWEALTH OF VIRGINIA
DEPARTMENT OF TRANSPORTATION

STRUCTURE AND BRIDGE DIVISION

42" PEDESTRIAN RAILING (BPR-1)

Designed: MRD	Date	Plan No.	Sheet No.
Drawn: MRD	July 2022	257-38A	84 of 125
Checked: WRA			

STATE	FEDERAL AID		STATE		SHEET NO.
	ROUTE	PROJECT	ROUTE	PROJECT	
VA.	—		95	0095-076-299, B688	85

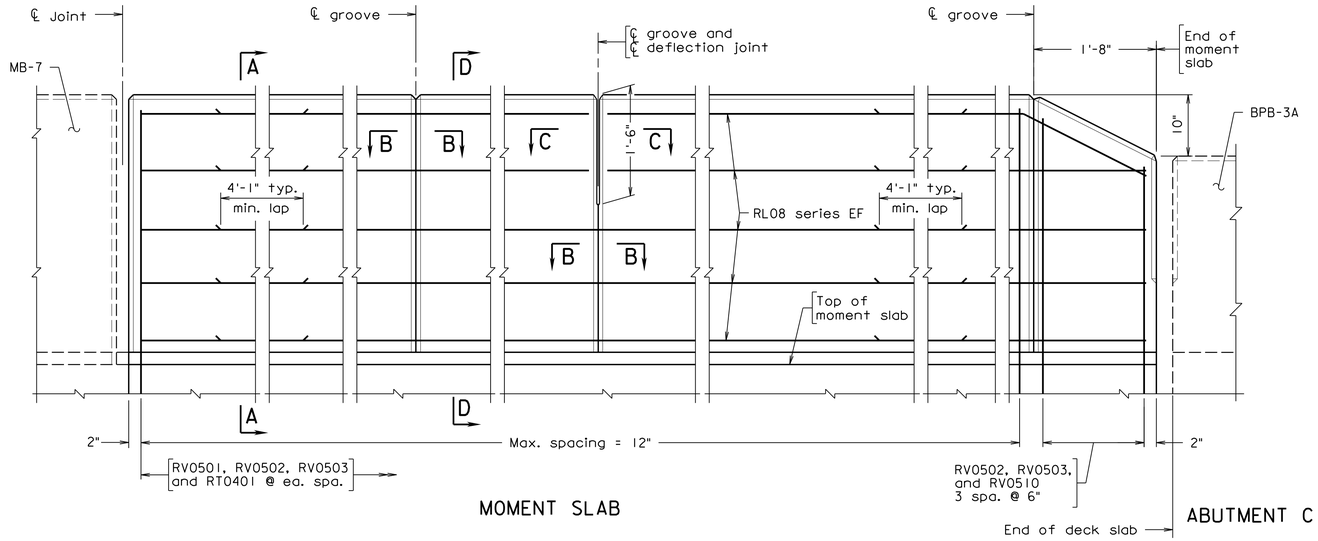

ELEVATION

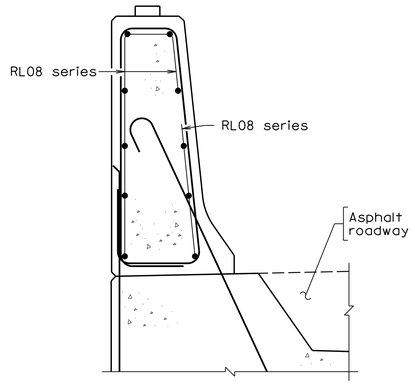

SECTION A-A

For dimensions and details not shown, see Section D-D

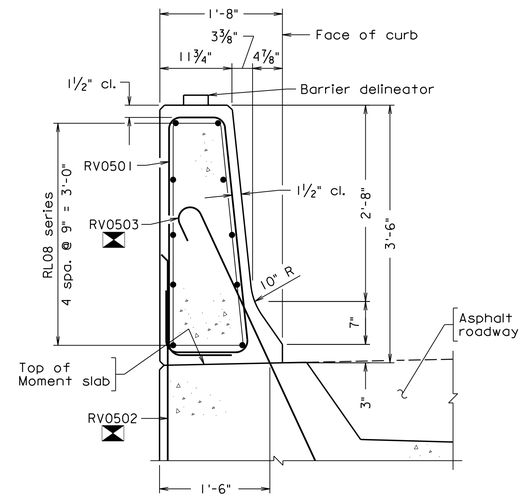

SECTION D-D

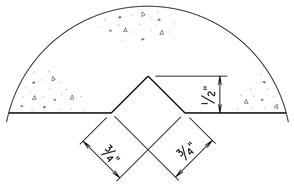

SECTION B-B

Full scale

Groove detail for both sides of parapet

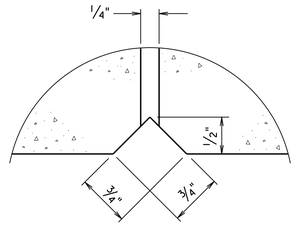

SECTION C-C

Full scale

Deflection joint detail for both sides of parapet

Notes:

Plan dimensions shown are measured in the respective horizontal and vertical planes.

The Contractor shall determine all dimensions and details necessary for installation.

All concrete shall be Low Shrinkage Class A4 Modified.

All chamfers for concrete shall be ¾".

The reinforcing steel shown has been detailed based on a standard ¼" per foot cross slope and for an 8½" slab depth. The Contractor shall adjust the reinforcing steel as required for other cross slopes and slab depths.

All reinforcing steel shall be Corrosion Resistant Reinforcing Steel, Class II.

Spacing of grooves is to be approximately 8'-0". If lighting standard is used (see bridge conduit system), groove shall be located approximately 4'-0" from centerline of light standard. Spacing of deflection joints shall not exceed three groove spaces.

Barrier delineator size, color and spacing shall be in accordance with the Specifications.

Parapet shall not be extruded if pedestrian fencing will be attached.

MSE wall fabricator shall adjust reinforcing steel as necessary for moment slab. Note that at drainage structures there is an opening for throat. MSE wall fabricator shall adjust reinforcing steel in barrier to accommodate this opening. See sheet 123. MSE fabricator shall submit sealed drawings of the barrier.

REINFORCING STEEL SCHEDULE

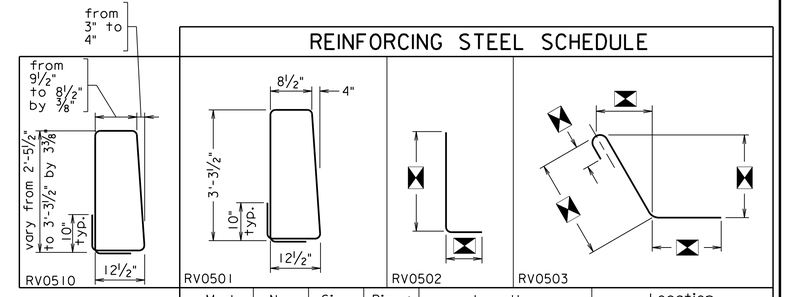

Mark	No.	Size	Pin ø	Length	Location
★RT0401		#4	—	⧓	Deck slab
RV0501		#5	3¾"	9'-5"	Parapet
RV0502		#5	3¾"	⧓	Parapet
RV0503		#5	3¾"	⧓	Parapet
RV0510		#5	3¾"	from 8'-2" to 9'-9"	Parapet
RL08		#8	—		Parapet

Dimensions in bending diagram are out-to-out of bars, except as shown.

Gross concrete quantities (C.Y.) = Lin. Ft. x 0.158
All concrete above deck slab.

★ Additional RT0401 transverse bar used only when moment slab transverse reinforcement is parallel to skew of bridge.

⧓ Dimensions, lengths, and number of bars to be determined by MSE wall fabricator, see sheet 123.

BPB-4 MOD. 04-30-2021 257-38A_085.dgn

COMMONWEALTH OF VIRGINIA
JEREMY SCHLUSSEL
Lic. No. 033974
PROFESSIONAL ENGINEER

Jeremy Schlussel
2022.07.08 18:46:13 -04'00'

WHITMAN REQUARDT & ASSOCIATES
RICHMOND, VA
STRUCTURAL ENGINEER

Scale: 1" = 1'-0" unless otherwise shown.

© 2022. Commonwealth of Virginia

No.	Description	Date
	Revisions	

COMMONWEALTH OF VIRGINIA
DEPARTMENT OF TRANSPORTATION

STRUCTURE AND BRIDGE DIVISION

42" CAST-IN-PLACE CONCRETE PARAPET (F-SHAPE) (BPB-4)

Designed: CRR	Date	Plan No.	Sheet No.
Drawn: CRR	July 2022	257-38A	85 of 125
Checked: MRD			

STATE	FEDERAL AID		STATE		SHEET NO.
	ROUTE	PROJECT	ROUTE	PROJECT	
VA.	—		95	0095-076-299, B688	86

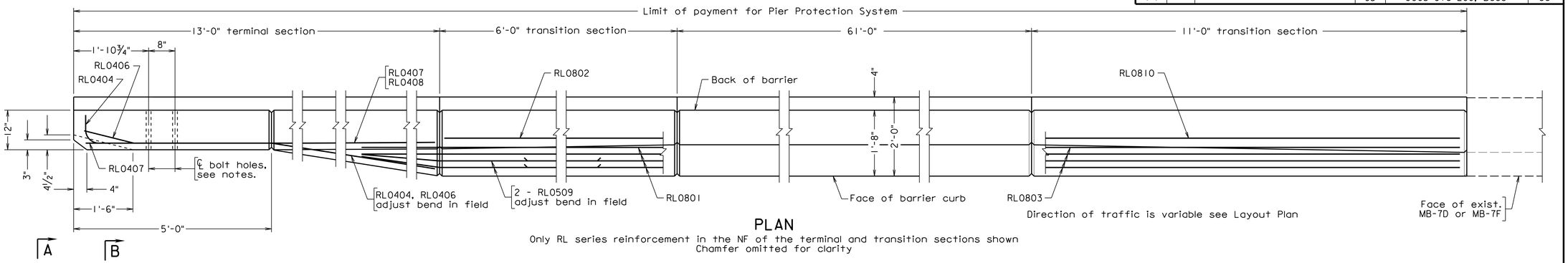

PLAN

Only RL series reinforcement in the NF of the terminal and transition sections shown
Chamfer omitted for clarity

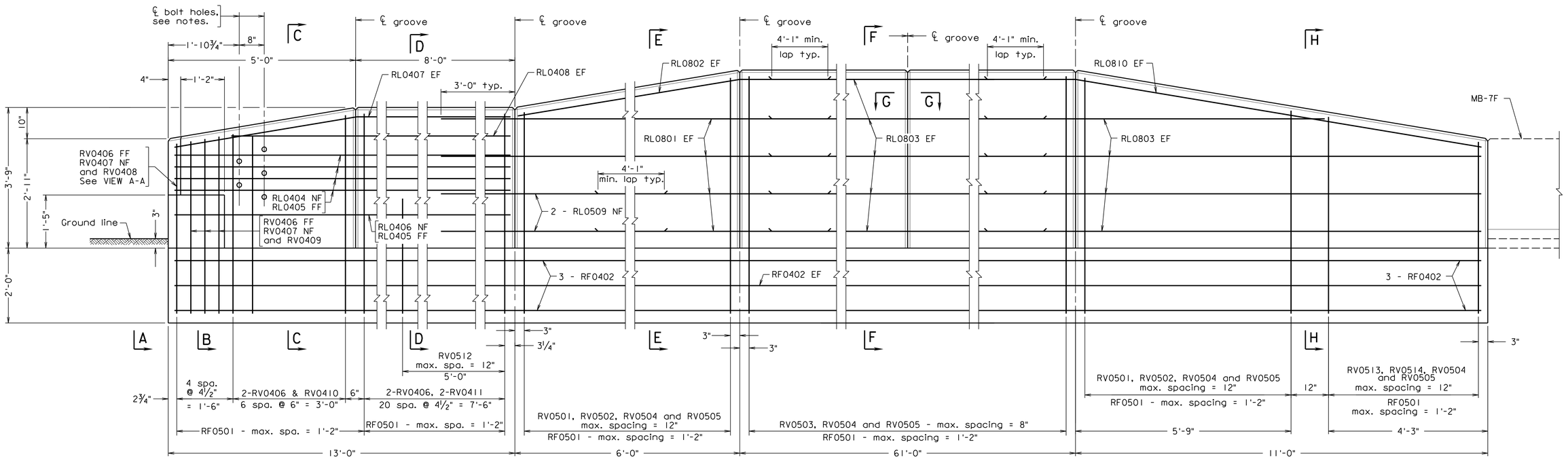

ELEVATION

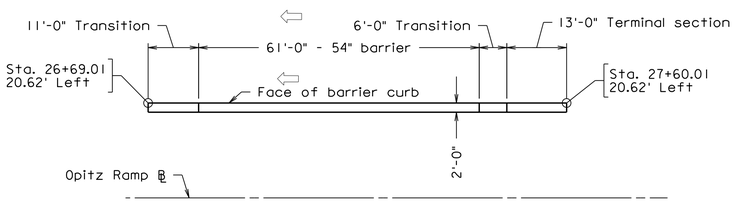

PIER PROTECTION BARRIER-MSE WALL LAYOUT PLAN

Scale: 1/16" = 1'-0"

Notes:

Plan dimensions shown are measured in the respective horizontal and vertical planes.

The Contractor shall determine all dimensions and details necessary for installation.

All concrete shall be Class A4.

All chamfers for concrete shall be ¾".

All reinforcing steel shall be Corrosion Resistant Reinforcing Steel, Class I except as indicated in the reinforcing steel schedule.

Spacing of grooves shall be approximately 8'-0". Spacing of transverse construction joints for crack control shall be at approximately 24'-0" to coincide with centerline of groove. Transverse construction joint through barrier and footing shall be at the same location.

Barrier delineator size, color and spacing shall be in accordance with the Specifications.

Terminal sections are detailed to take guardrail attachment GR-F0A-5.

Holes, where shown, shall be formed with sleeves of 1¼" diameter nominal pipe.

For Section H-H, see sheet 88.

For reinforcing steel schedule and details not shown, see sheet 90.

Scale: ¾" = 1'-0" unless otherwise shown.

© 2022, Commonwealth of Virginia

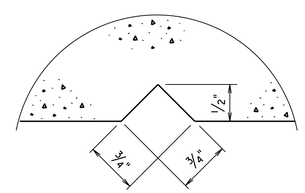

SECTION G-G

Full scale
Groove detail for both sides of barrier

COMMONWEALTH OF VIRGINIA
JEREMY SCHLUSSEL
Lic. No. 033974
PROFESSIONAL ENGINEER

Jeremy Schlussel
2022.07.08 18:45:50 -04'00'

WHITMAN REQUARDT & ASSOCIATES
RICHMOND, VA
STRUCTURAL ENGINEER

No.	Description	Date
	Revisions	

COMMONWEALTH OF VIRGINIA
DEPARTMENT OF TRANSPORTATION

STRUCTURE AND BRIDGE DIVISION

PIER PROTECTION SYSTEM 54" HIGH (BPPS-1A) 1 OF 4

Designed: CRR	Date	Plan No.	Sheet No.
Drawn: CRR	July 2022	257-38A	86 of 125
Checked: MRD			

257-38A_086.dgn

BPPS-1A MOD. 10-30-2020

STATE	FEDERAL AID		STATE		SHEET NO.
	ROUTE	PROJECT	ROUTE	PROJECT	
VA.	—		95	0095-076-299, B688	87

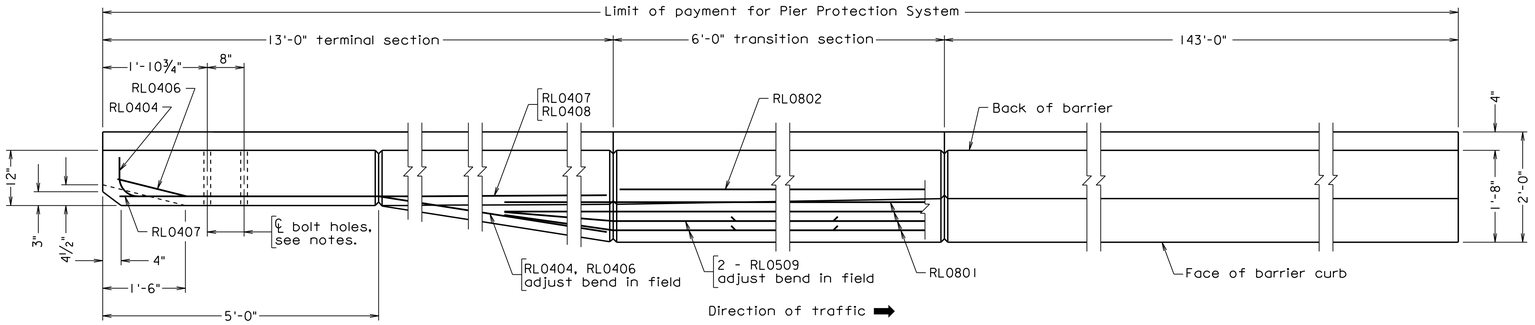

PLAN

Only RL series reinforcement in the NF of the terminal and transition sections shown
Chamfer omitted for clarity

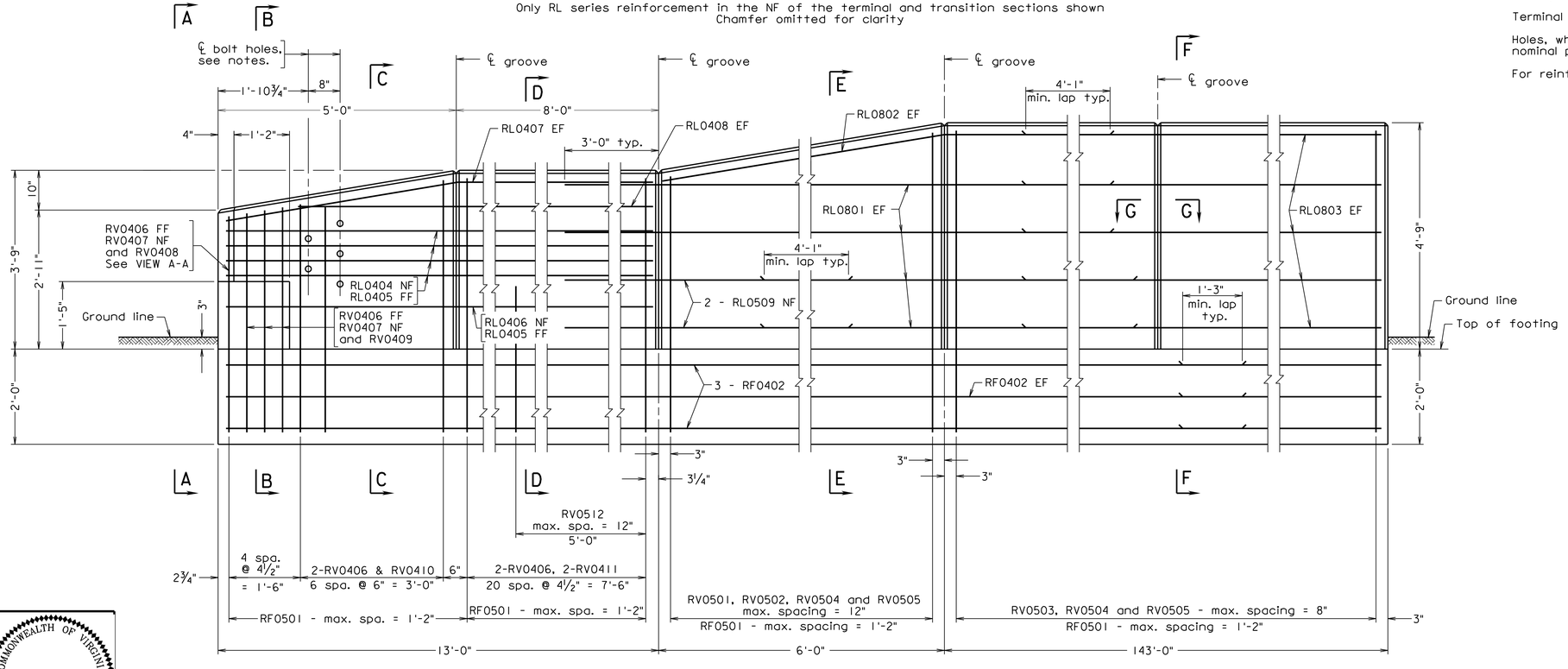

ELEVATION

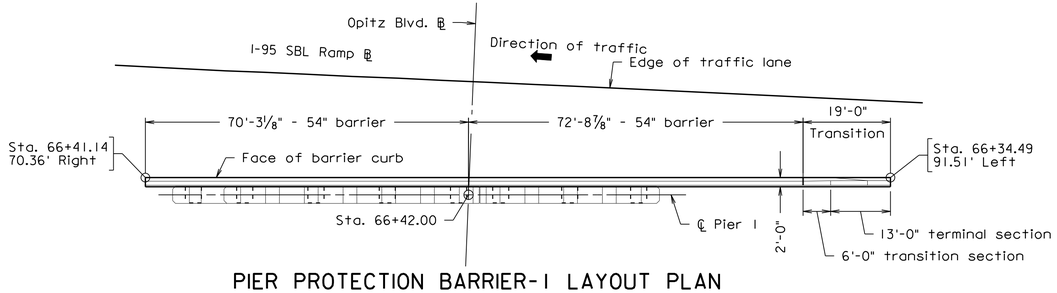

PIER PROTECTION BARRIER-1 LAYOUT PLAN

Scale: 1/16" = 1'-0"

Notes:

Plan dimensions shown are measured in the respective horizontal and vertical planes.

The Contractor shall determine all dimensions and details necessary for installation.

All concrete shall be Class A4.

All chamfers for concrete shall be ¾".

All reinforcing steel shall be Corrosion Resistant Reinforcing Steel, Class I except as indicated in the reinforcing steel schedule.

Spacing of grooves shall be approximately 8'-0". Spacing of transverse construction joints for crack control shall be at approximately 24'-0" to coincide with centerline of groove. Transverse construction joint through barrier and footing shall be at the same location.

Barrier delineator size, color and spacing shall be in accordance with the Specifications.

Terminal sections are detailed to take guardrail attachment GR-FOA-5.

Holes, where shown, shall be formed with sleeves of 1¼" diameter nominal pipe.

For reinforcing steel schedule and details not shown, see sheet 90.

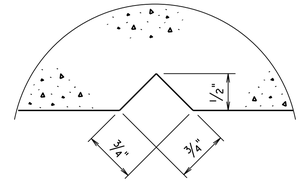

SECTION G-G

Full scale
Groove detail for both sides of barrier

Scale: ¾" = 1'-0" unless otherwise shown.

© 2022, Commonwealth of Virginia

257-38A_087.dgn

BPPS-1A 10-30-2020

COMMONWEALTH OF VIRGINIA
JEREMY SCHLUSSEL
Lic. No. 033974
PROFESSIONAL ENGINEER

Jeremy Schlussel
2022.07.08 18:45:31 -04'00'

WHITMAN REQUARDT & ASSOCIATES
RICHMOND, VA
STRUCTURAL ENGINEER

Sealed and Signed by:
Junyi Meng
Lic. No. 033572
On the date of
October 30, 2020

A copy of the original sealed and signed standard drawing is on file in the Central Office.

VDOT S&B DIVISION
RICHMOND, VA
STRUCTURAL ENGINEER

No.	Description	Date
	Revisions	

COMMONWEALTH OF VIRGINIA
DEPARTMENT OF TRANSPORTATION

STRUCTURE AND BRIDGE DIVISION

PIER PROTECTION SYSTEM 54" HIGH (BPPS-1A) 2 OF 4

Designed: CRR	Date	Plan No.	Sheet No.
Drawn: CRR	July 2022	257-38A	87 of 125
Checked: MRD			

STATE	FEDERAL AID		STATE		SHEET NO.
	ROUTE	PROJECT	ROUTE	PROJECT	
VA.	—		95	0095-076-299, B688	88

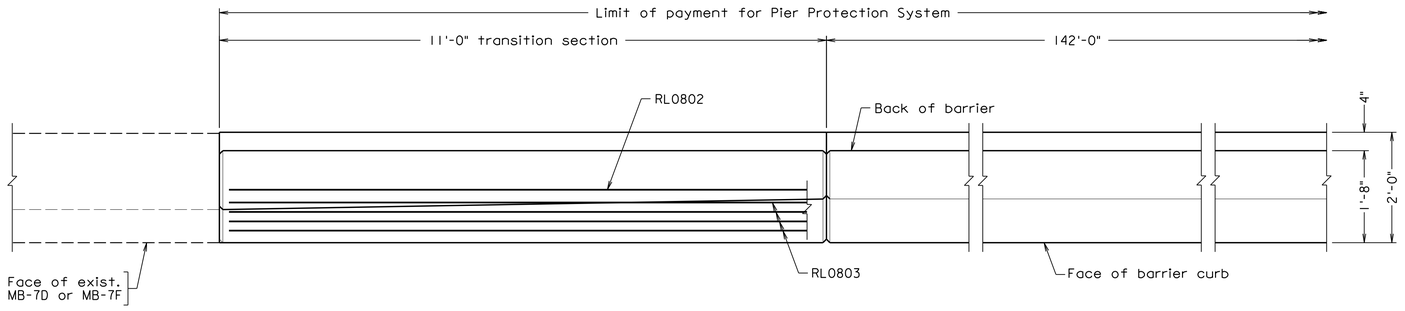

PLAN

Only RL series reinforcement in the NF of the terminal and transition sections shown
Chamfer omitted for clarity

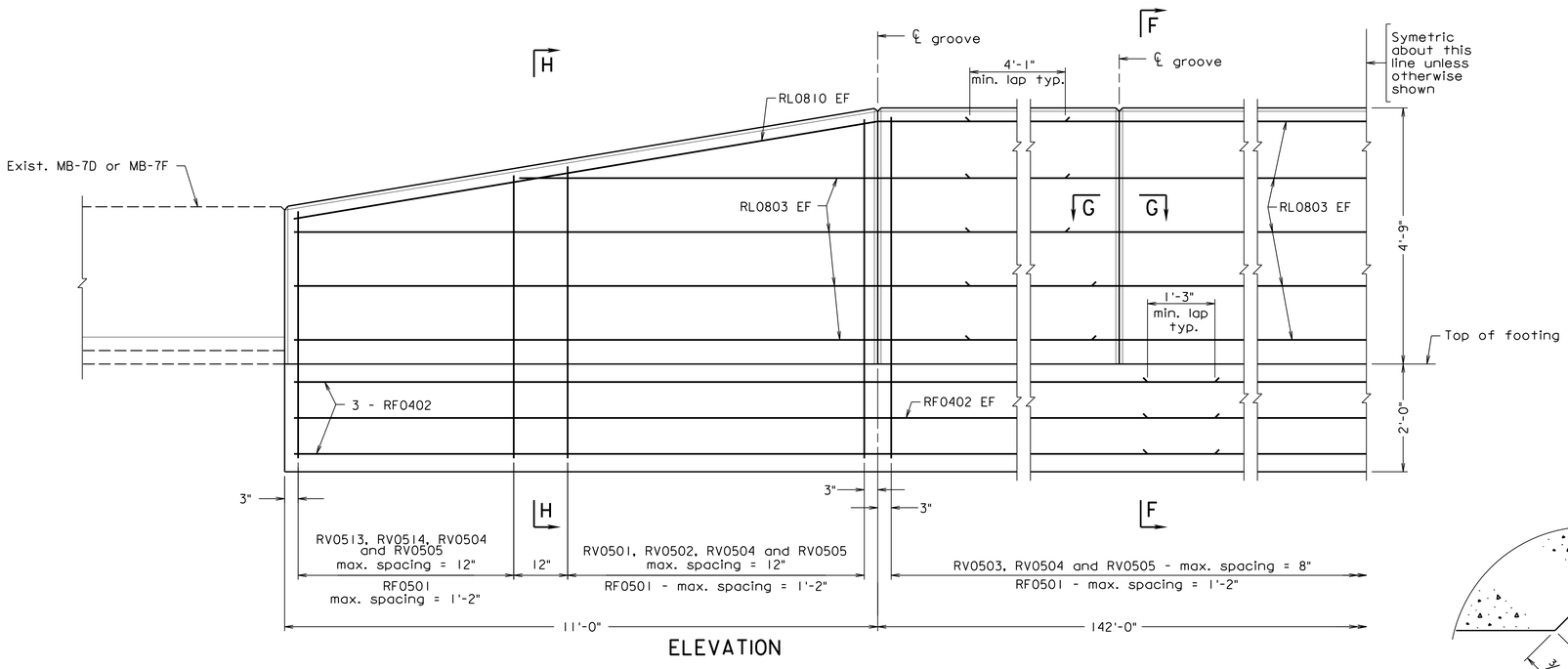

ELEVATION

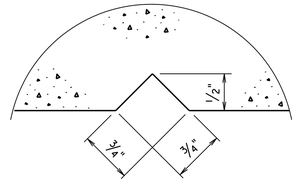

SECTION G-G

Full scale
Groove detail for both sides of barrier

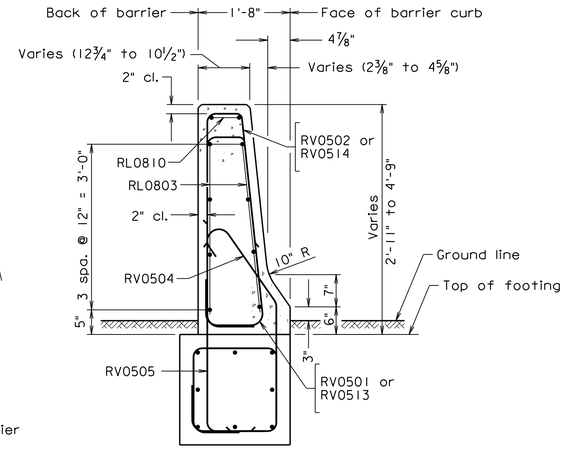

SECTION H-H

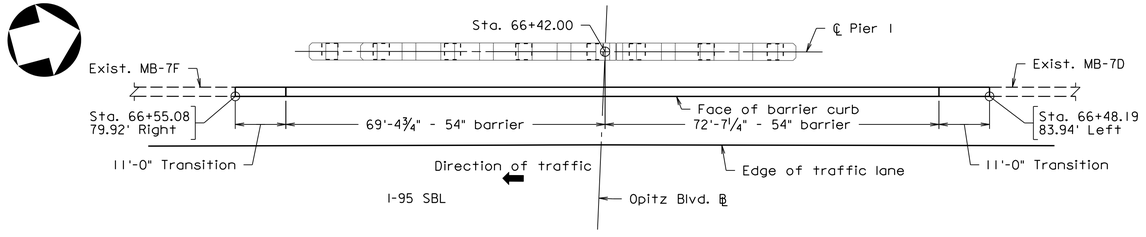

PIER PROTECTION BARRIER-2 LAYOUT PLAN

Scale: 1/16" = 1'-0"

Scale: 3/4" = 1'-0" unless otherwise shown.

Notes:

Plan dimensions shown are measured in the respective horizontal and vertical planes.

The Contractor shall determine all dimensions and details necessary for installation.

All concrete shall be Class A4.

All chamfers for concrete shall be 3/4".

All reinforcing steel shall be Corrosion Resistant Reinforcing Steel, Class I except as indicated in the reinforcing steel schedule.

Spacing of grooves shall be approximately 8'-0". Spacing of transverse construction joints for crack control shall be at approximately 24'-0" to coincide with centerline of groove. Transverse construction joint through barrier and footing shall be at the same location.

Barrier delineator size, color and spacing shall be in accordance with the Specifications.

Terminal sections are detailed to take guardrail attachment GR-F0A-5.

Holes, where shown, shall be formed with sleeves of 1 1/4" diameter nominal pipe.

For reinforcing steel schedule and details not shown, see sheet 90.

© 2022, Commonwealth of Virginia

COMMONWEALTH OF VIRGINIA
JEREMY SCHLUSSEL
Lic. No. 033974
PROFESSIONAL ENGINEER
Jeremy Schlussel
2022.07.08 18:53:23 -04'00'
WHITMAN REQUARDT & ASSOCIATES
RICHMOND, VA
STRUCTURAL ENGINEER

No.	Description	Date
Revisions		

COMMONWEALTH OF VIRGINIA
DEPARTMENT OF TRANSPORTATION

STRUCTURE AND BRIDGE DIVISION

PIER PROTECTION SYSTEM 54" HIGH (BPPS-1A) 3 OF 4

Designed: CRR	Date	Plan No.	Sheet No.
Drawn: CRR	July 2022	257-38A	88 of 125
Checked: MRD			

257-38A_088.dgn

BPPS-1A MOD.10-30-2020

STATE	FEDERAL AID		STATE		SHEET NO.
	ROUTE	PROJECT	ROUTE	PROJECT	
VA.	—		95	0095-076-299, B688	89

Notes:

Plan dimensions shown are measured in the respective horizontal and vertical planes.

The Contractor shall determine all dimensions and details necessary for installation.

All concrete shall be Class A4.

All chamfers for concrete shall be ¾".

All reinforcing steel shall be Corrosion Resistant Reinforcing Steel, Class I except as indicated in the reinforcing steel schedule.

Spacing of grooves shall be approximately 8'-0". Spacing of transverse construction joints for crack control shall be at approximately 24'-0" to coincide with centerline of groove. Transverse construction joint through barrier and footing shall be at the same location.

Barrier delineator size, color and spacing shall be in accordance with the Specifications.

Terminal sections are detailed to take guardrail attachment GR-FOA-5.

Holes, where shown, shall be formed with sleeves of 1¼" diameter nominal pipe.

For reinforcing steel schedule and details not shown, see sheet 90.

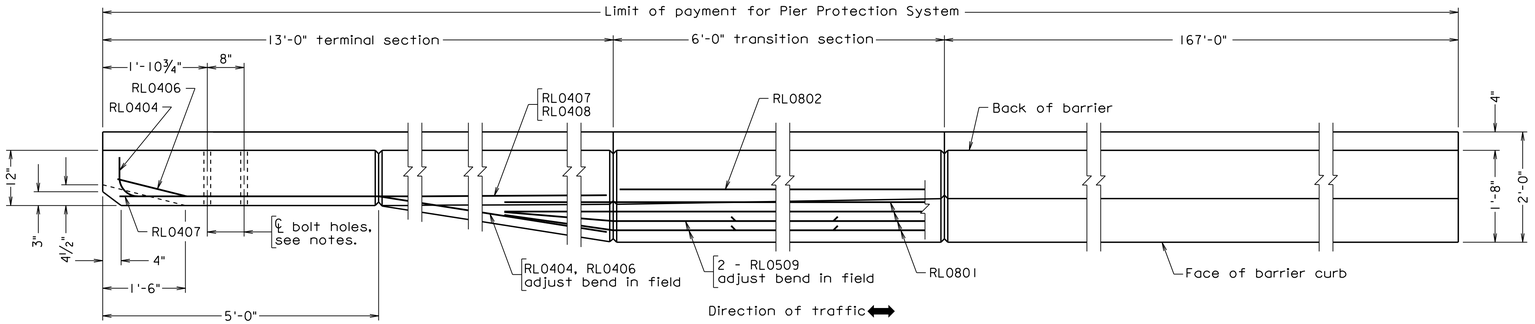

PLAN

Only RL series reinforcement in the NF of the terminal and transition sections shown
Chamfer omitted for clarity

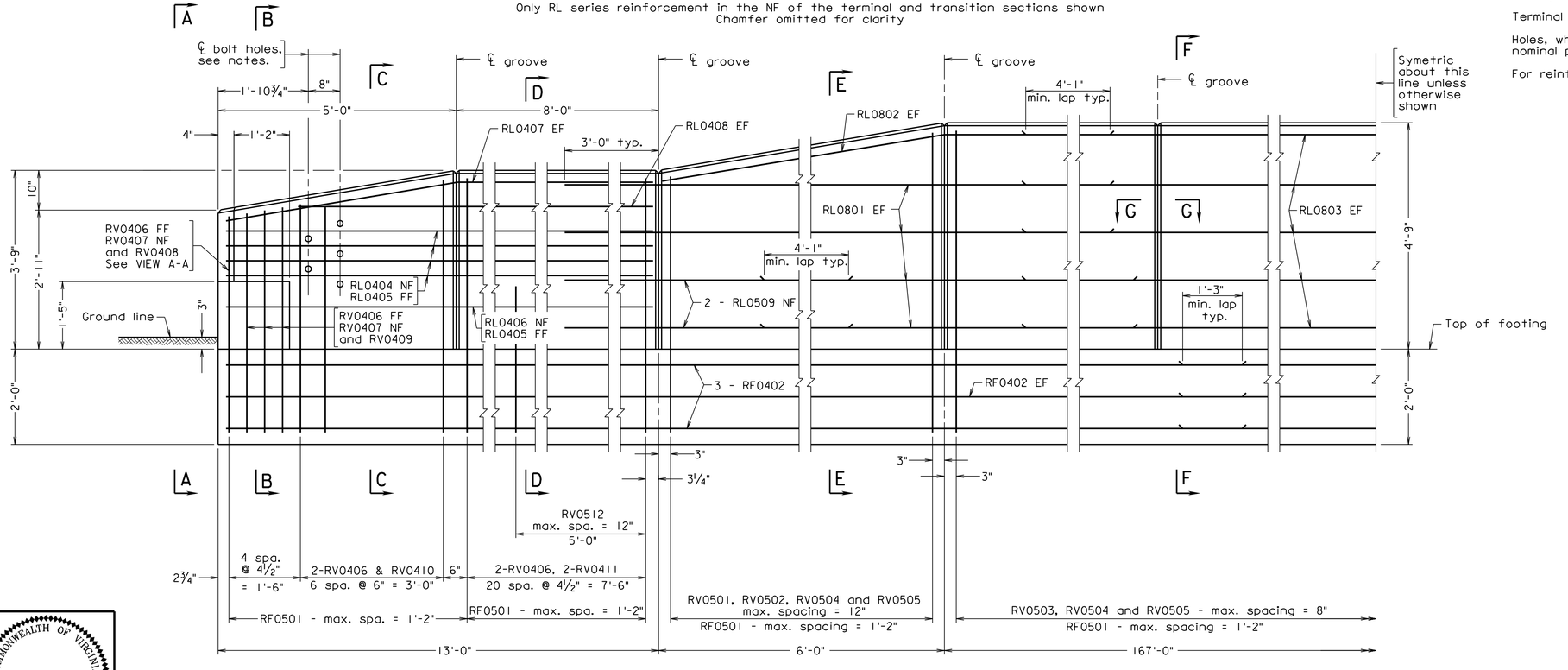

ELEVATION

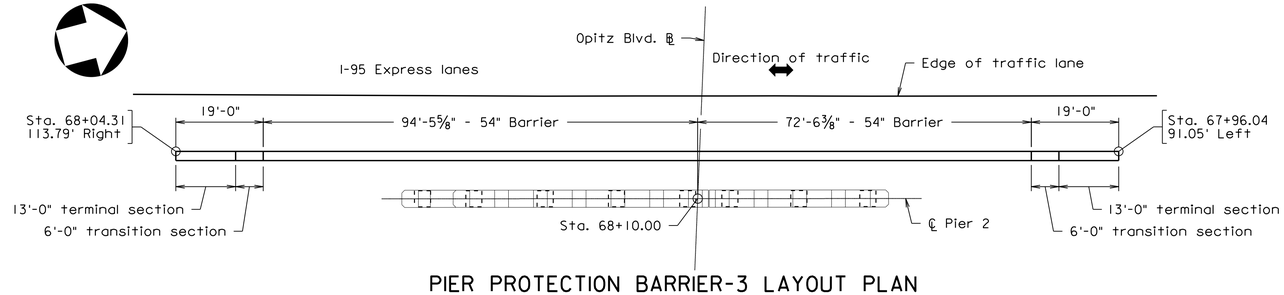

PIER PROTECTION BARRIER-3 LAYOUT PLAN

Scale: 1/16" = 1'-0"

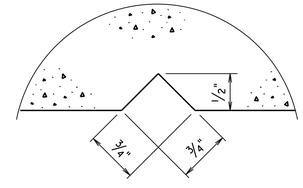

SECTION G-G

Full scale
Groove detail for both sides of barrier

Scale: ¾" = 1'-0" unless otherwise shown.

© 2022, Commonwealth of Virginia

257-38A_089.dgn

BPPS-1A 10-30-2020

COMMONWEALTH OF VIRGINIA
JEREMY SCHLUSSEL
Lic. No. 033974
PROFESSIONAL ENGINEER

Jeremy Schlussel
2022.07.08 18:59:10 -04'00'

WHITMAN REQUARDT & ASSOCIATES
RICHMOND, VA
STRUCTURAL ENGINEER

Sealed and Signed by:
Junyi Meng
Lic. No. 033572
On the date of
October 30, 2020

A copy of the original sealed and signed standard drawing is on file in the Central Office.

VDOT S&B DIVISION
RICHMOND, VA
STRUCTURAL ENGINEER

No.	Description	Date
	Revisions	

COMMONWEALTH OF VIRGINIA
DEPARTMENT OF TRANSPORTATION

STRUCTURE AND BRIDGE DIVISION

PIER PROTECTION SYSTEM 54" HIGH (BPPS-1A) 4 OF 4

Designed: CRR	Date	Plan No.	Sheet No.
Drawn: CRR	July 2022	257-38A	89 of 125
Checked: MRD			

STATE	FEDERAL AID		STATE		SHEET NO.
	ROUTE	PROJECT	ROUTE	PROJECT	
VA.	—		95	0095-076-299, B688	90

Notes:

1. Footing dimensions and RF series bars are typical in all sections, but only labeled in SECTION B-B.
2. 2'-6" min. from the break line of embankment unless footing adjacent to a permanent structure.

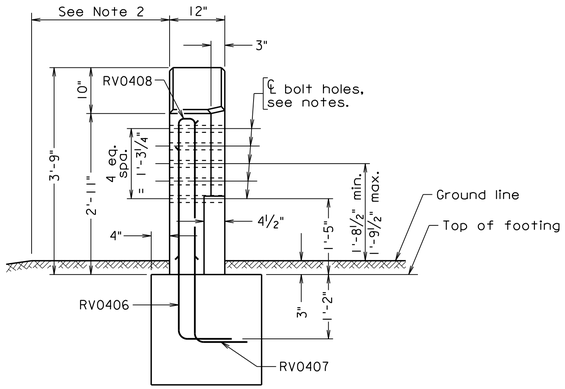

VIEW A-A

For clarity, only bars RV0406, RV0407 and RV0408 shown

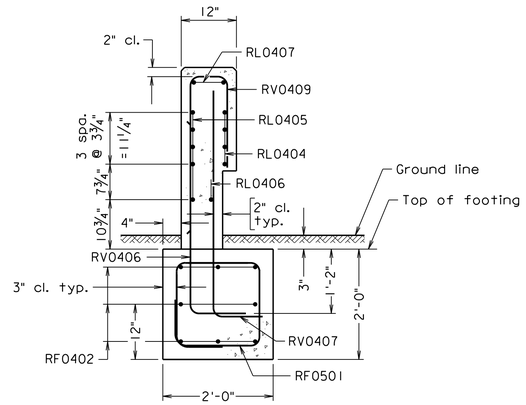

SECTION B-B

Bolt holes not shown

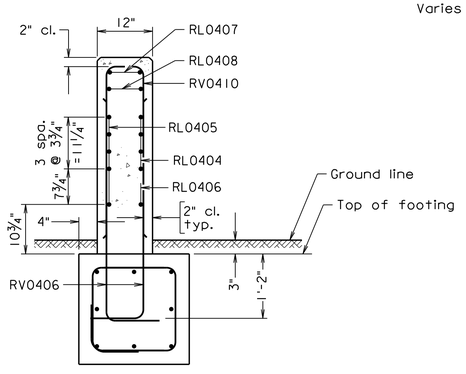

SECTION C-C

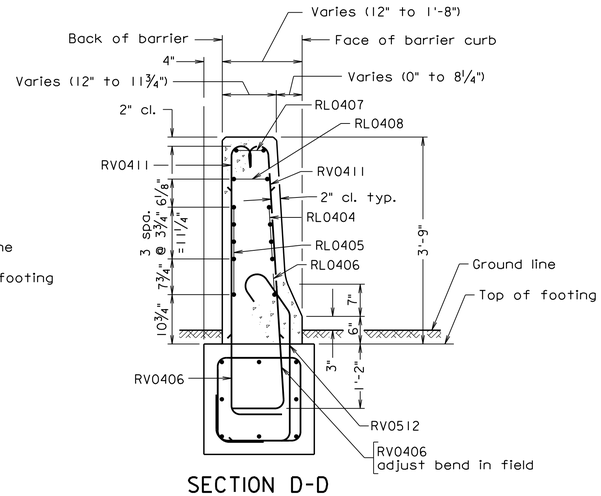

SECTION D-D

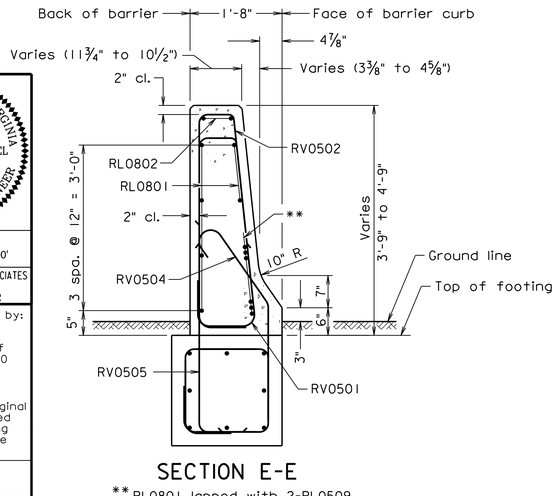

SECTION E-E

** RL0801 lapped with 2-RL0509

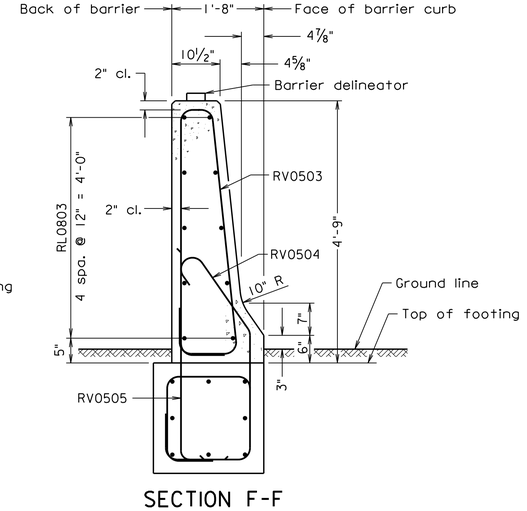

SECTION F-F

REINFORCING STEEL SCHEDULE

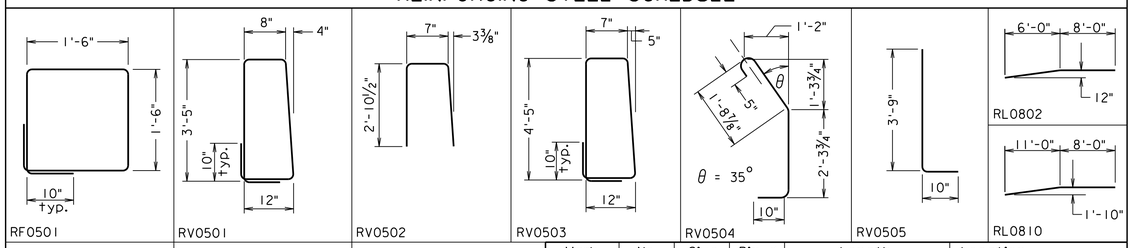

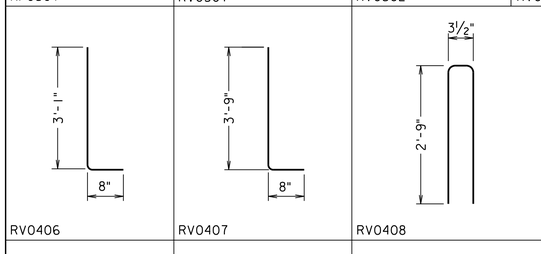

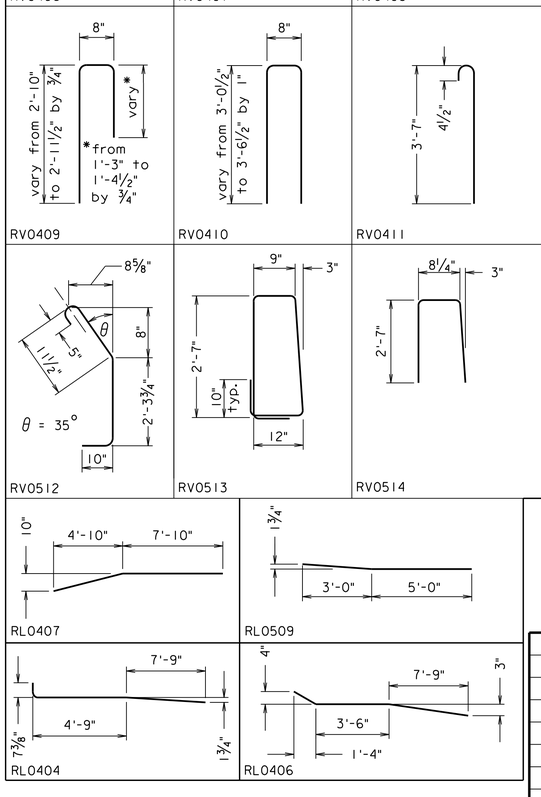

Mark	No.	Size	Pin ø	Length	Location
RV0501		#5	3¾"	9'-7"	Barrier
RV0502		#5	3¾"	6'-2"	Barrier
RV0503		#5	3¾"	11'-6"	Barrier
RV0504		#5	3¾"	5'-4"	Barrier/footing
RV0505		#5	3¾"	4'-6"	Barrier/footing
RV0406		#4	3"	3'-8"	Terminal wall/footing
RV0407		#4	3"	4'-4"	Terminal wall/footing
RV0408		#4	2"	5'-8"	Terminal wall
RV0409		#4	3"	from 4'-7" to 4'-10"	Terminal wall
RV0410		#4	3"	from 6'-7" to 7'-7"	Terminal wall
RV0411		#4	3"	4'-1"	Terminal wall
RV0512		#5	3¾"	4'-7"	Terminal wall/footing
RV0513		#5	3¾"	8'-0⅝"	Barrier
RV0514		#5	3¾"	5'-8"	Barrier
RL0801		#8	—	17'-0"	Barrier/Terminal wall
RL0802		#8	6"	14'-1"	Barrier
RL0803		#8	—		Barrier
RL0404		#4	6"	13'-0"	Terminal wall
RL0405		#4	—	12'-8"	Terminal wall
RL0406		#4	3"	12'-8"	Terminal wall
RL0407		#4	3"	12'-9"	Terminal wall
RL0408		#4	—	11'-5"	Terminal wall
RL0509		#5	3¾"	8'-0"	Barrier/Terminal wall
RL0810		#8	6"	19'-1"	Barrier
*RF0501		#5	3¾"	7'-1"	Footing
*RF0402		#4	—		Footing

Dimensions in bending diagram are out-to-out of bars.

*All RF series bars shall be ASTM A615, Grade 60.

257-38A_090.dgn

BPPS-2A 10-30-2020

COMMONWEALTH OF VIRGINIA
JEREMY SCHLUSSEL
Lic. No. 033974
PROFESSIONAL ENGINEER

Jeremy Schlussel
2022.07.08 18:59:54 -04'00'

WHITMAN REQUARDT & ASSOCIATES
RICHMOND, VA
STRUCTURAL ENGINEER

Sealed and Signed by:
Junyi Meng
Lic. No. 033572
On the date of
October 30, 2020

A copy of the original sealed and signed standard drawing is on file in the Central Office.

VDOT S&B DIVISION
RICHMOND, VA
STRUCTURAL ENGINEER

Scale: ¾" = 1'-0" unless otherwise shown

© 2022, Commonwealth of Virginia

No.	Description	Date
	Revisions	

COMMONWEALTH OF VIRGINIA
DEPARTMENT OF TRANSPORTATION

STRUCTURE AND BRIDGE DIVISION

PIER PROTECTION SYSTEM 54" HIGH (BPPS-2A)

Designed: CRR	Date	Plan No.	Sheet No.
Drawn: CRR	July 2022	257-38A	90 of 125
Checked: MRD			

STATE	FEDERAL AID		STATE		SHEET NO.
	ROUTE	PROJECT	ROUTE	PROJECT	
VA.	—		95	0095-076-299, B688	91

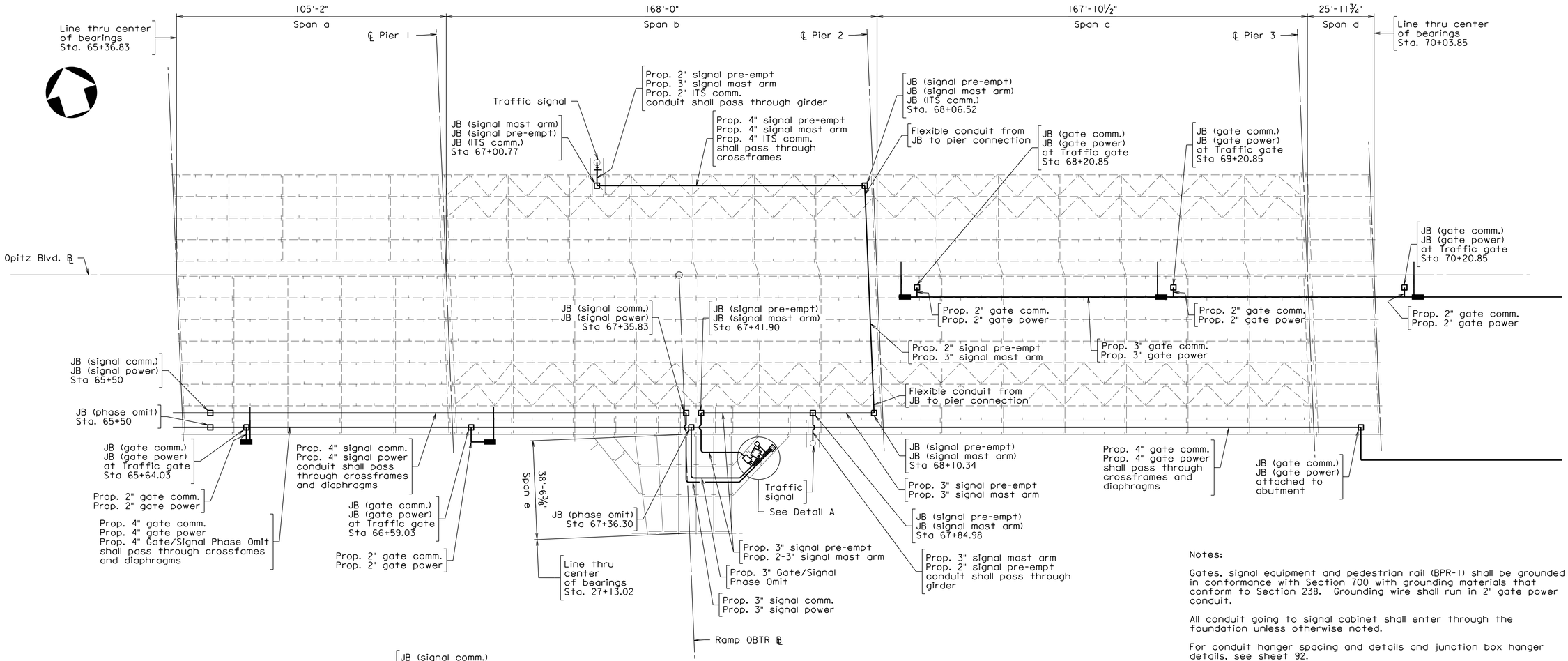

CONDUIT PLAN

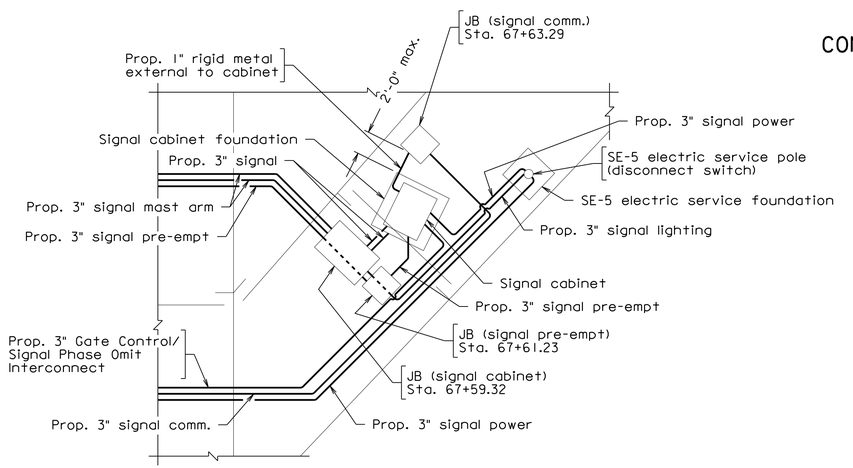

DETAIL A

JUNCTION BOX SIZES	
Signal comm.	18"x18"x8"
Signal power	18"x18"x8"
Signal cabinet	36"x24"x24"
Signal pre-empt	12"x12"x6"
Phase omit	18"x18"x8"
Gate comm.	24"x24"x12"
Gate power	18"x18"x8"
Signal mast arm	30"x18"x18"

Notes:

Gates, signal equipment and pedestrian rail (BPR-1) shall be grounded in conformance with Section 700 with grounding materials that conform to Section 238. Grounding wire shall run in 2" gate power conduit.

All conduit going to signal cabinet shall enter through the foundation unless otherwise noted.

For conduit hanger spacing and details and junction box hanger details, see sheet 92.

For conduit details at Abutment B, see sheet 93.

Conduit will pass under girders unless indicated to pass through girder. For girder conduit hole access, see sheets 59 thru 60.

JB is for junction box.

For additional information on signal cabinet and SE-5 pole and details of conduits connecting to bridge conduit system at the abutments, see roadway plans.

For signal cabinet and SE-5 pole foundation details and conduit penetration in deck slab details, see sheet 67.

For conduit details on Pier 2 see sheet 93.

For conduit details on MSE Wall No. 2, see sheet 125.

For lighting conduit details not shown, see sheets 94, 95, and 96.

COMMONWEALTH OF VIRGINIA
JEREMY SCHLUSSEL
Lic. No. 033974
PROFESSIONAL ENGINEER

Jeremy Schlussel
2022.07.08 18:59:34 -04'00'

WHITMAN REQUARDT & ASSOCIATES
RICHMOND, VA
STRUCTURAL ENGINEER

Scale: 1" = 20' unless otherwise noted.

© 2022, Commonwealth of Virginia

No.	Description	Date
	Revisions	

COMMONWEALTH OF VIRGINIA
DEPARTMENT OF TRANSPORTATION

STRUCTURE AND BRIDGE DIVISION

BRIDGE CONDUIT PLAN

Designed: WRA
Drawn: WRA
Checked: WRA

Date	Plan No.	Sheet No.
July 2022	257-38A	91 of 125

257-38A_091.dgn

STATE	FEDERAL AID		STATE		SHEET NO.
	ROUTE	PROJECT	ROUTE	PROJECT	
VA.	—		95	0095-076-299, B688	92

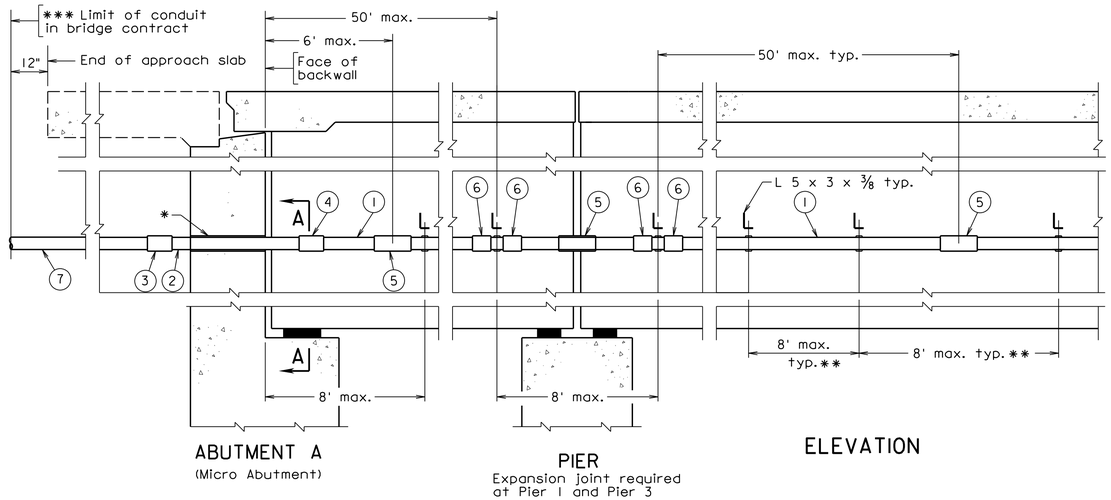

* Wrap with Geotextile separation fabric before placing backwall concrete

** Spacing shown is for maximum spacing of hangers for 4" diameter conduit. Maximum spacing of hanger shall be 6'-0" for 3" diameter conduit in Span e.

1. 4" (Spans a thru d) or 3" (Span e) ø Fiberglass Reinforced Epoxy (FRE) duct
2. 4" ø galv. steel duct
3. FRE-galv. adaptor
4. Galv.-FRE adaptor
5. FRE exp. joint
6. FRE lock ring
7. 4" ø Polyvinyl chloride (PVC) pipe

Notes:

FRE expansion joints shall be sliding sleeve type to accommodate at least 4" of expansion or contraction in each direction.

In no case shall expansion joints be spaced more than 100 ft.

Duct splices shall be adhesive bonded bell and spigot.

Threaded couplings shall be used on steel conduit.

For beams/girders that are weathering steel:
- steel angles, fittings and rods shall be weathering steel
- H.S. bolts shall be ASTM F3125 Grade A325 Type 3

For beams/girders that are painted steel or galvanized:
- steel angles, fittings and rods shall be galvanized
- H.S. bolts shall be ASTM F3125 Grade A325 Type 1 galvanized

Hanger details shown are designed to support as many as 8 conduits.
Dead Loads: Cables: 8.5 lbs./ft. per conduit
Conduit: 1.5 lbs./ft.

Underground installation of FRE conduit shall be in accordance with Road and Bridge Standards ECI-1 except the minimum spacing between ducts shall be ¾".

Vertical conduit runs shall be galvanized steel duct with FRE-galv. adaptors as necessary.

For conduit and junction box sizes and layout, see sheet 91.

Conduit shall pass under girders, diaphragms and cross frames unless otherwise noted to pass through as indicated in the conduit plan on sheet 91.

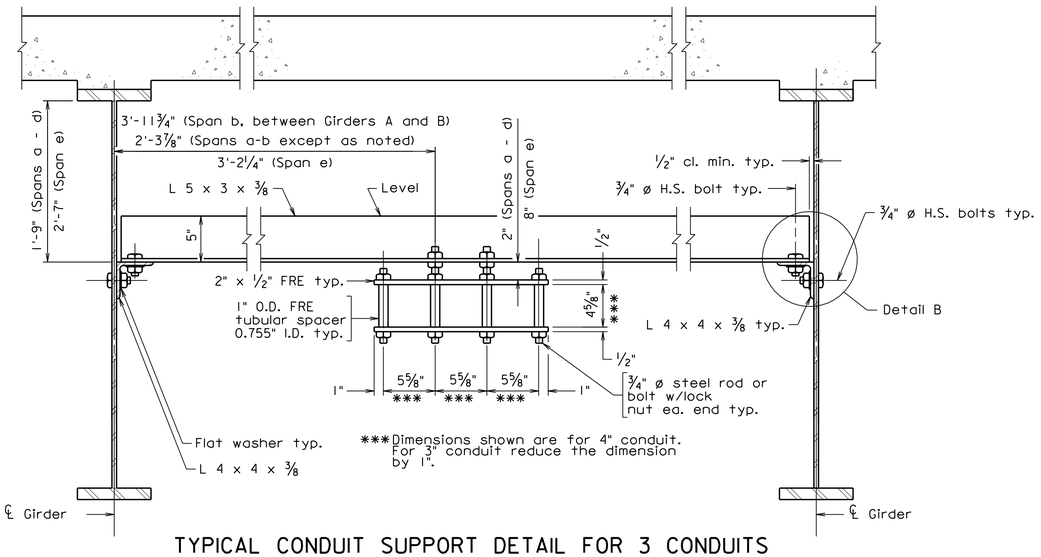

TYPICAL CONDUIT SUPPORT DETAIL FOR 3 CONDUITS

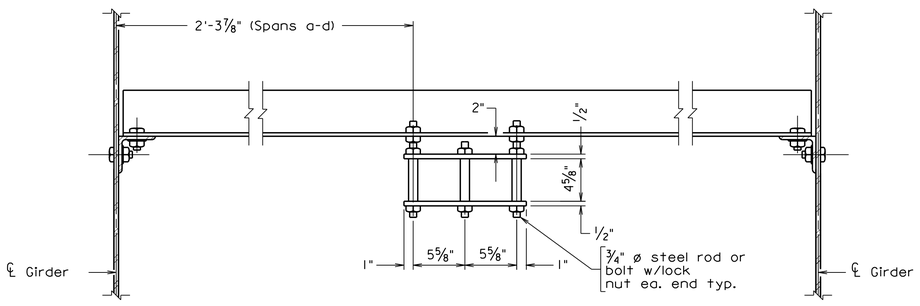

TYPICAL CONDUIT SUPPORT DETAIL FOR 2 CONDUITS

For additional information not shown see Typical Conduit Support Detail for 3 Conduits.

Not to scale

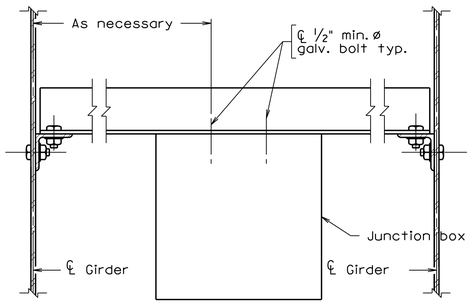

TYPICAL JUNCTION BOX SUPPORT DETAIL

For additional information not shown see Typical Conduit Support Detail for 3 Conduits.

Bolts shall be per manufacturer's recommendations.

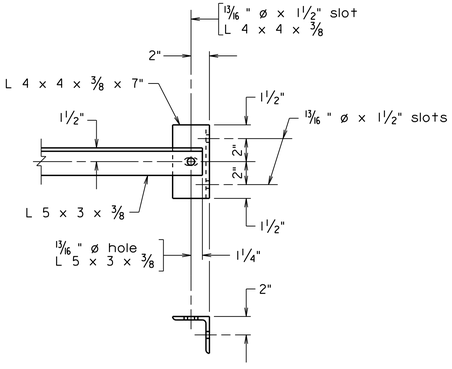

DETAIL B

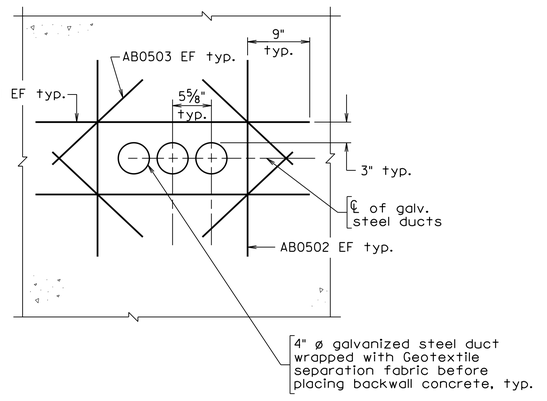

PIPE PENETRATION DETAIL

For location of conduit, see sheet 11.

CONDUIT FORMATIONS

Number of conduits	2	3
Hanger typ.		

257-38A_092.dgn

BCLC-1B MOD. 10-31-2019

COMMONWEALTH OF VIRGINIA
JEREMY SCHLUSSEL
Lic. No. 033974
PROFESSIONAL ENGINEER

Jeremy Schlussel
2022.07.08 18:58:48 -04'00'

WHITMAN REQUARDT & ASSOCIATES
RICHMOND, VA
STRUCTURAL ENGINEER

No.	Description	Date
Revisions		

COMMONWEALTH OF VIRGINIA
DEPARTMENT OF TRANSPORTATION

STRUCTURE AND BRIDGE DIVISION

COMMUNICATION LINES CONDUIT SYSTEM 1 OF 2

Designed: CRR	Date	Plan No.	Sheet No.
Drawn: CRR	July 2022	257-38A	92 of 125
Checked: MRD			

© 2022. Commonwealth of Virginia

STATE	FEDERAL AID		STATE		SHEET NO.
	ROUTE	PROJECT	ROUTE	PROJECT	
VA.	—		95	0095-076-299, B688	93

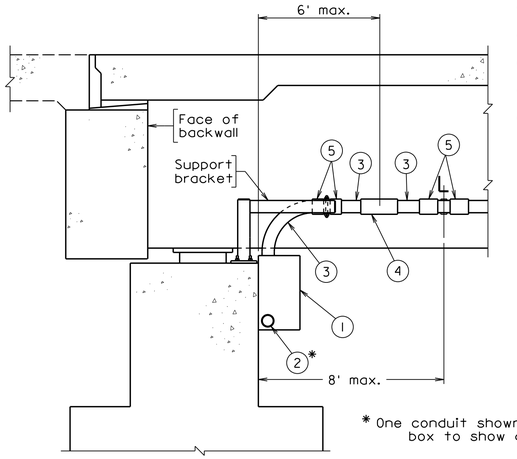

1. junction box mounted in approved location
2. 4" ø galv. steel duct
3. 4" ø FRE duct
4. FRE exp. joint
5. FRE lock ring

* One conduit shown. Modify junction box to show actual number

ABUTMENT
For use at Abutment B

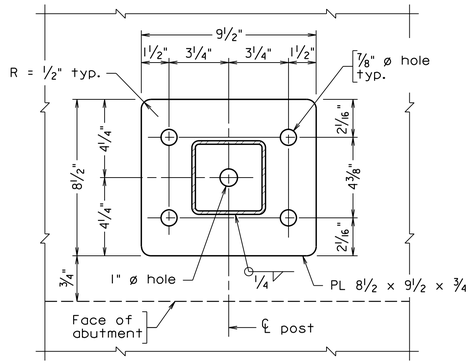

BASE PLATE DETAIL

Notes:

See sheet 92 for additional notes and details.

Steel tubing and plates for support bracket shall be galvanized.

Hanger details shown are designed to support as many as 8 conduits.
Dead Loads: Cables: 8.5 lbs./ft. per conduit
Conduit: 1.5 lbs./ft.

Conduit and junction boxes shall be attached to pier cap and columns with approved embedded galvanized concrete anchors.

Conduit attached to pier shall be galvanized steel duct.

Junction box sizes noted on sheet 91.

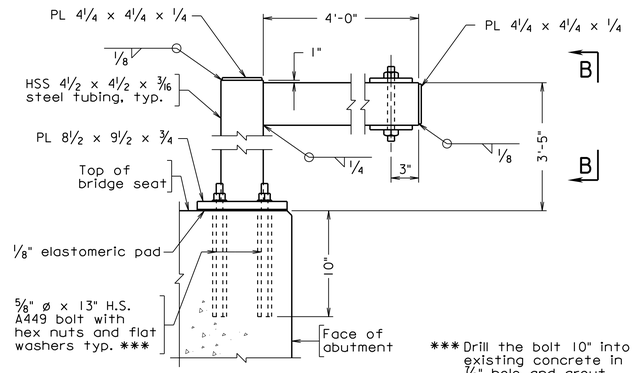

SUPPORT BRACKET
(2 required per abutment)

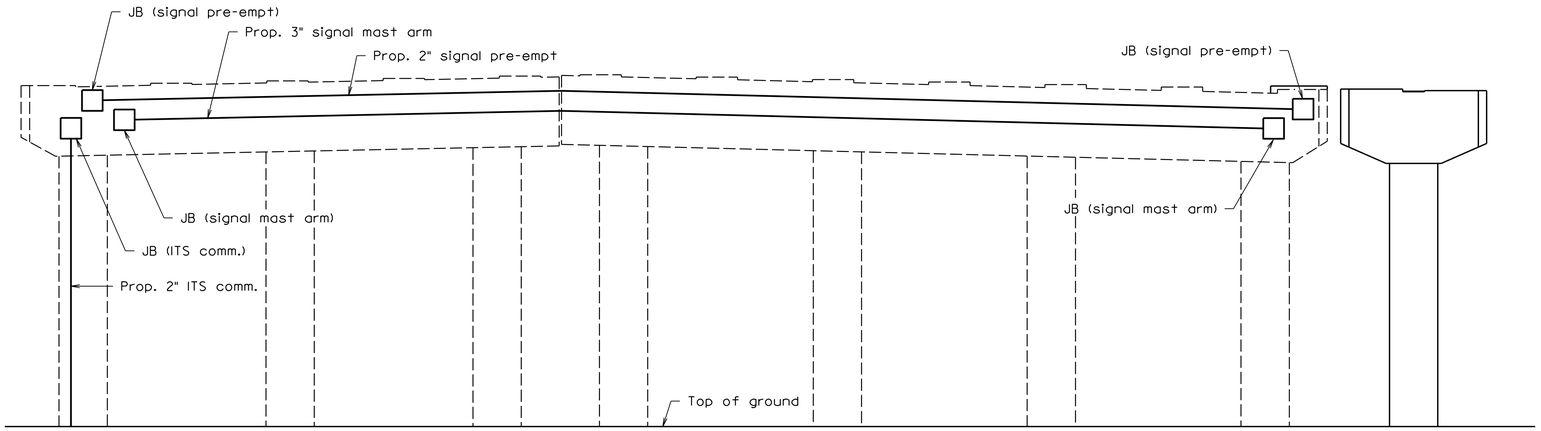

Flexible conduit between junction boxes on pier and junction boxes in girder bays

ELEVATION OF CONDUIT ON PIER 2

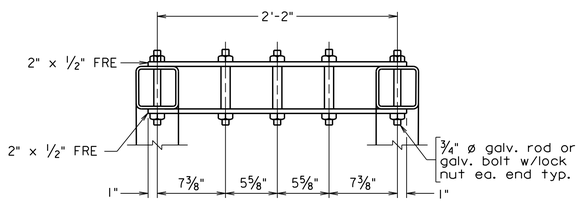

VIEW B-B

257-38A_093.dgn

BCLC-1E MOD. 10-31-2019

COMMONWEALTH OF VIRGINIA
JEREMY SCHLUSSEL
Lic. No. 033974
PROFESSIONAL ENGINEER

Jeremy Schlussel
2022.07.08 18:58:28 -04'00'

WHITMAN REQUARDT & ASSOCIATES
RICHMOND, VA
STRUCTURAL ENGINEER

Not to scale

© 2022, Commonwealth of Virginia

No.	Description	Date
	Revisions	

COMMONWEALTH OF VIRGINIA
DEPARTMENT OF TRANSPORTATION

STRUCTURE AND BRIDGE DIVISION

COMMUNICATION LINES CONDUIT SYSTEM 2 OF 2

Designed: CRR	Date	Plan No.	Sheet No.
Drawn: CRR	July 2022	257-38A	93 of 125
Checked: MRD			

STATE	FEDERAL AID		STATE		SHEET NO.
	ROUTE	PROJECT	ROUTE	PROJECT	
VA.	—		95	0095-076-299, B688	94

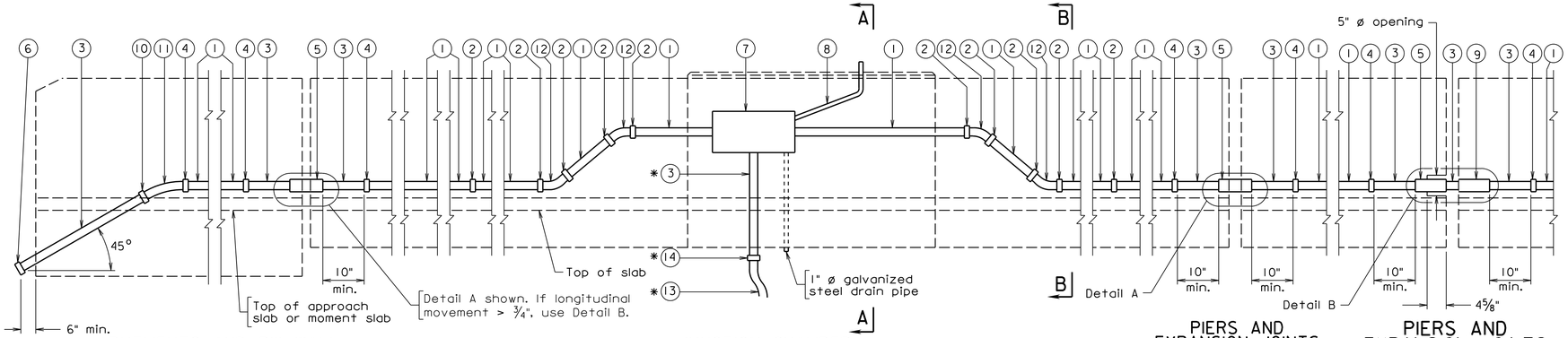

ABUTMENTS AND RW WALL

Elevation shown at Abutment A. At Abutment B, Abutment C, and RW Wall the conduit shall extend level through joint and into barrier and not turn down. See sheet 94a for conduit in BPB-4A. See roadway plans for conduit in MB-7F.

1. 2" ø nonmetallic conduit
2. Nonmetallic coupling
3. 2" ø metal conduit
4. Adapter to connect nonmetallic conduit to metal conduit
5. Metal expansion and deflection fitting
6. 2" ø pipe cap
7. 8" x 6" x 1'-4" formed junction chamber
8. 1" ø metal conduit.
9. Metal expansion fitting
10. Pipe coupling
11. 2" ø 45° 13" R steel elbow
12. 2" ø 45° 9½" R nonmetallic elbow
13. 2" ø flexible conduit *
14. Adapter to connect metallic conduit to flexible conduit *

* Flexible conduit from junction chamber to junction box on MSE wall face. Locations only at the following junction chambers:

Sta. 27+16.95 (future)
Sta. 27+18.39 (future)
Sta. 27+21.95 (lighting)
Sta. 27+23.32 (lighting)

JUNCTION CHAMBER

Blister shown and shall be used at lightpole anchorage locations as noted in the plans. Junction chambers not located at lightpole anchorage locations shall not have a blister.

CONDUIT LAYOUT

Scale: ¾" = 1'-0"

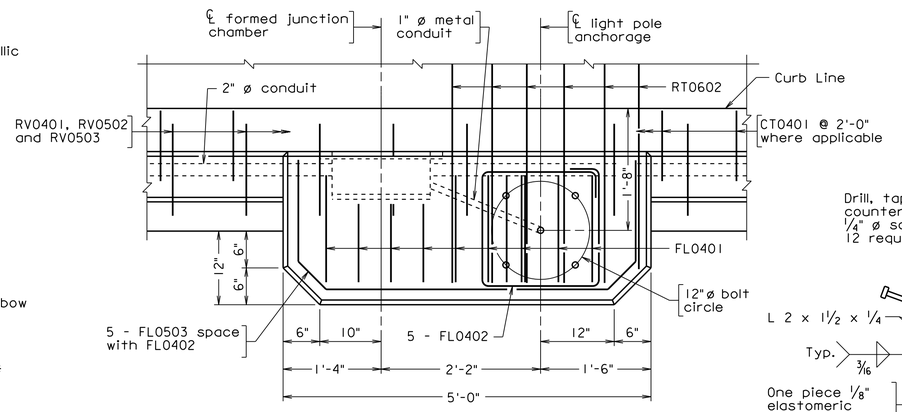

PLAN

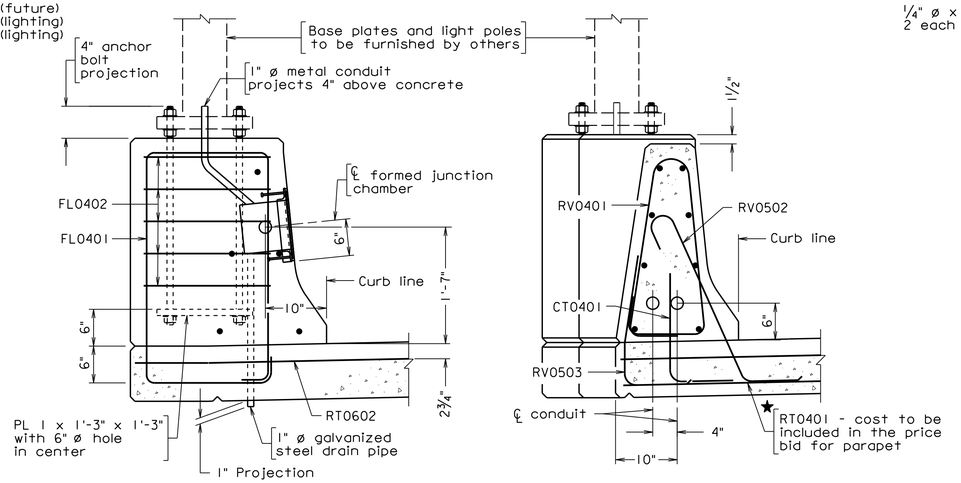

SECTION A-A

At lightpole anchorage
Adjust conduit as necessary to clear lightpole anchorage.

SECTION B-B

PIERS AND EXPANSION JOINTS

For longitudinal movement ≤ ¾"

PIERS AND EXPANSION JOINTS

For longitudinal movement > ¾"

Abutment	Pier	Longitudinal Movement	t	Detail Type
A		¾	1/16	A
B		1⅞	⅛	B
C		¾	⅜	**
	1	2	¼	B
Moment Slab		¾	1/16	A

When deck is continuous over pier or at moment slab contraction joints, expansion and deflection fitting detail is not required.

**An approved rubber coupler shall be used at Abutment C to allow for longitudinal movement noted in above table and ⅞ inches of transverse movement.

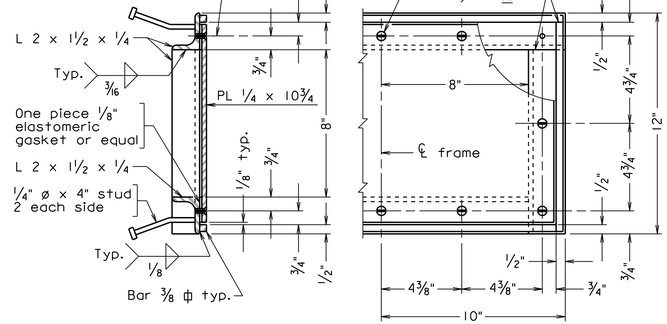

JUNCTION CHAMBER FRAME

Scale: 3" = 1'-0"

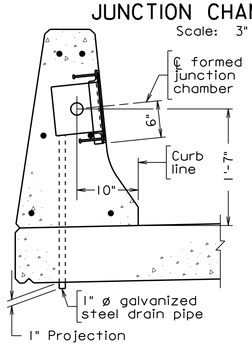

SECTION A-A

Not at lightpole anchorage
Scale: 1" = 1'-0" unless otherwise shown.

Notes:

All reinforcing bars shall be corrosion resistant reinforcing steel - class II.

Cut or bend bars to clear junction chamber.

Close adherence to the manufacturer's requirements in regard to clearances for the installation of deflection fittings shall be observed.

Junction chamber frame and cover to be galvanized, after fabrication, in accordance with ASTM A123.

Anchor bolt specifications:

Nuts (Top): ASTM F467 Alloy 6262-T9 or 6061-T6.
(Bottom): ASTM A563.
Thread series for all nuts to be UNC-2B.
Washers: (Top): ASTM B209 Alloy Alclad 2024-T3 or T4, 2¼" ø x 0.165".
(Bottom): ASTM F844.
Rods: 1" diameter, ASTM A276, type 430 or 410 annealed, hot-finished. Threads on rods may be rolled or cut. 3½" at each end of rod shall be threaded. Each rod shall be supplied with 3 washers and 3 nuts.

In the designations noted above, top refers to hardware above the top of baseplate. Bottom refers to hardware below the baseplate including embedment in concrete.

Longitudinal movement is the maximum amount of movement of the expansion and deflection fitting calculated for placement at 60° F and shall be adjusted in accordance with manufacturer's requirements. The amount of movement shall be increased or decreased for every 10° F temperature drop or rise respectively by t.

All joints in parapet shall have a Detail A expansion and deflection fitting with ¾ inches of longitudinal movement except as noted in the table.

The Contractor shall determine all dimensions and details necessary for installation.

Conduit shall be grounded in conformance with Section 700 with grounding materials that conform to Section 238.

Cost of Bridge Conduit System and anchorages shall be included in price bid for Bridge Lighting System.

Only one conduit per junction chamber. Use offset junction chambers for separate conduit runs.

For location of junction chambers, see sheet 69.

REINFORCING STEEL SCHEDULE

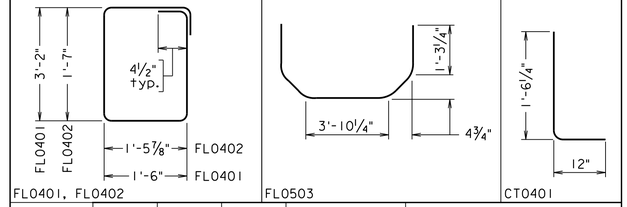

Mark	No.	Size	Pin ø	Length	Location
FL0401		#4	2"	9'-8"	Light base
FL0402		#4	2"	6'-5¾"	Light base
FL0503		#5	3¾"	7'-5"	Light base
CT0401		#4	3"	2'-5"	Conduit tie
RV0401	⊙	#4			
RV0502	⊙	#5			
RV0503	⊙	#5			
★RT0401	⊙	#4			
RT0602		#6	—		Top of deck slab

Dimensions in bending diagram are out-to-out of bars.

⊙ Bars RV0401, RV0502, RV0503 and RT0401 are detailed and accounted for on parapet detail sheet.

★ Used only when deck transverse reinforcement is parallel to skew of bridge

© 2022, Commonwealth of Virginia

BCS-28A 10-31-2019 257-38A_094.dgn

COMMONWEALTH OF VIRGINIA
JEREMY SCHLUSSEL
Lic. No. 033974
PROFESSIONAL ENGINEER

Jeremy Schlussel
2022.07.08 18:57:46 -04'00'

WHITMAN REQUARDT & ASSOCIATES
RICHMOND, VA
STRUCTURAL ENGINEER

No.	Description	Date
	Revisions	

COMMONWEALTH OF VIRGINIA
DEPARTMENT OF TRANSPORTATION

STRUCTURE AND BRIDGE DIVISION

BRIDGE LIGHTING SYSTEM BPB-3A

Designed: CRR	Date	Plan No.	Sheet No.
Drawn: CRR	July 2022	257-38A	94 of 125
Checked: MRD			

STATE	FEDERAL AID		STATE		SHEET NO.
	ROUTE	PROJECT	ROUTE	PROJECT	
VA.	—		95	0095-076-299, B688	95

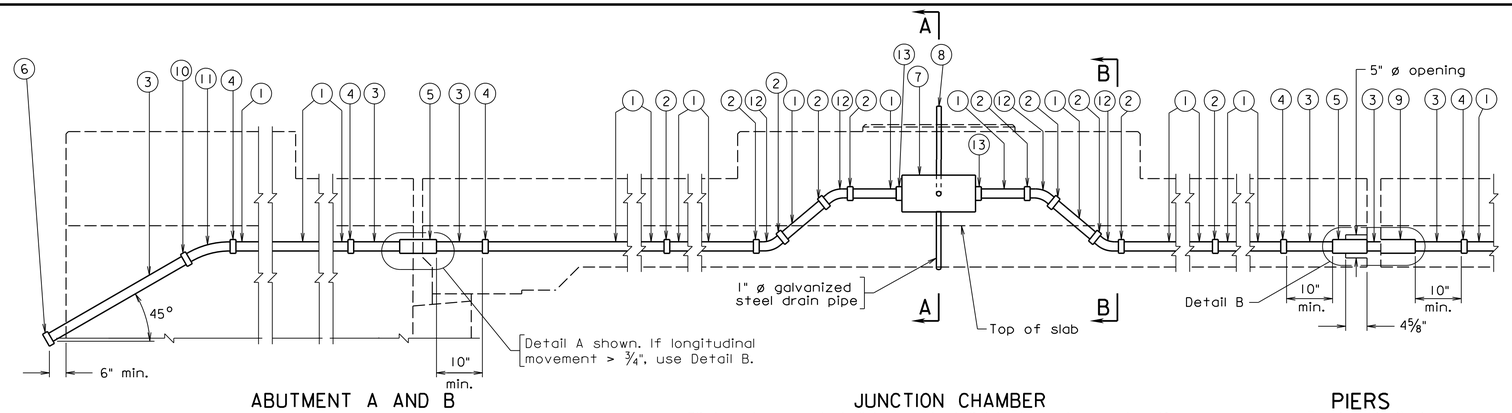

ABUTMENT A AND B

JUNCTION CHAMBER

Blister shown and shall be used at lightpole anchorage locations as noted in the plans. Junction chambers not located at lightpole anchorage locations shall not have a blister.

PIERS

For longitudinal movement > ¾"

Notes:

All reinforcing bars shall be Corrosion Resistant Reinforcing Steel, Class II.

Cut or bend bars to clear junction chamber.

Close adherence to the manufacturer's requirements in regard to clearances for the installation of deflection fittings shall be observed.

Junction chamber frame and cover to be galvanized, after fabrication, in accordance with ASTM A123.

Cost of Bridge Conduit System and anchorages shall be included in price bid for Bridge Lighting System.

Anchor bolts shall be high-strength anchor bolts. Anchor bolts, nuts and washers shall conform to Section 226.02(c) 2. and shall be hot-dip galvanized. 4" at each end of anchor bolt shall be threaded. Each anchor bolt shall be supplied with 3 washers and 3 nuts.

Longitudinal movement is the maximum amount of movement of the expansion and deflection fitting calculated for placement at 60° F and shall be adjusted in accordance with manufacturer's requirements. The amount of movement shall be increased or decreased for every 10° F temperature drop or rise respectively by t.

The Contractor shall determine all dimensions and details necessary for installation.

Conduit shall be grounded in conformance with Section 700 with grounding materials that conform to Section 238.

Location of light pole shall be adjusted such that anchor bolts of rail post clears the conduit system and the light pole base area.

Only one conduit per junction chamber. Use offset junction chambers for separate conduit runs.

For location of junction chambers, see sheet 69.

Abutment	Pier	Longitudinal Movement	t	Detail Type
A		¾	1/16	A
B		1⅞	⅛	B
	1	2"	¼	B

When deck is continuous over pier or at moment slab contraction joints, expansion and deflection fitting detail is not required.

1. 2" ø nonmetallic conduit
2. Nonmetallic coupling
3. 2" ø metal conduit
4. Adapter to connect nonmetallic conduit to metal conduit
5. Metal expansion and deflection fitting
6. 2" ø pipe cap
7. 8" x 8" x 1'-4" formed junction chamber
8. 1" ø metal conduit - Furnish locknut and bushing to connect conduit to junction box
9. Metal expansion fitting
10. Metallic coupling
11. 2" ø 45° 13" R steel elbow
12. 2" ø 45° 9½" R nonmetallic elbow
13. Bell fitting or bushing to connect conduit to junction box

CONDUIT LAYOUT

Not to scale

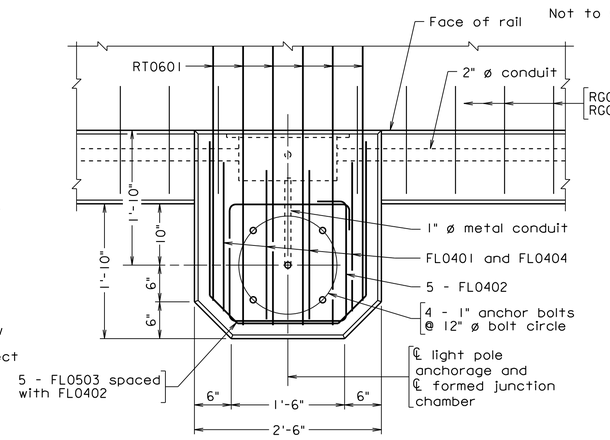

PLAN

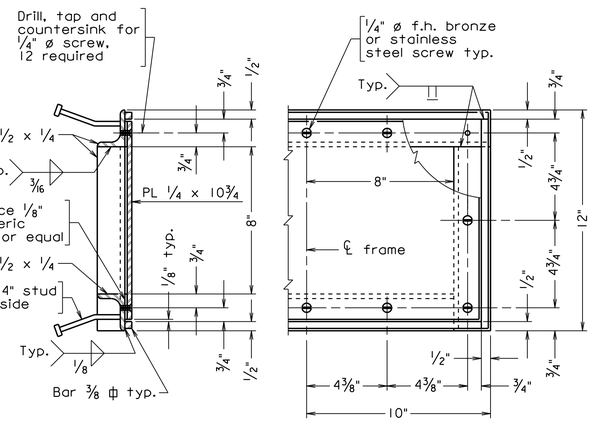

JUNCTION CHAMBER FRAME

Scale: 3" = 1'-0"

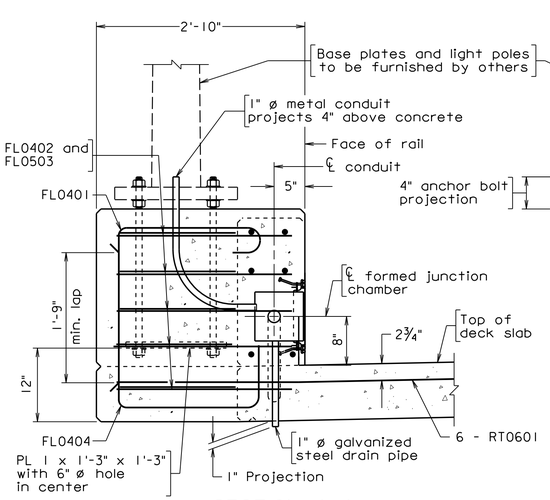

SECTION A-A

Uncut RL04 series shown.
At lightpole anchorage

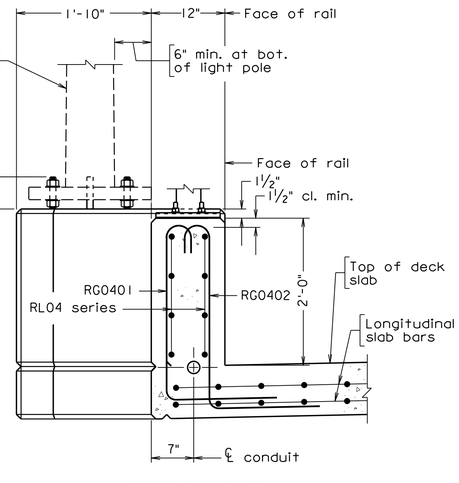

SECTION B-B

Transevese rebars in deck slab not shown for clarity

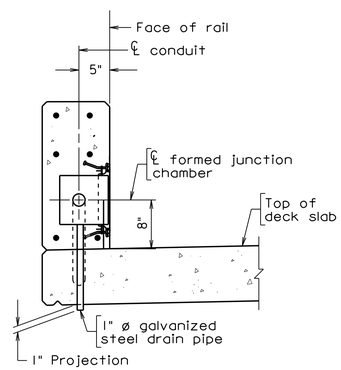

SECTION A-A

Uncut RL04 series shown.
Not at lightpole anchorage

REINFORCING STEEL SCHEDULE

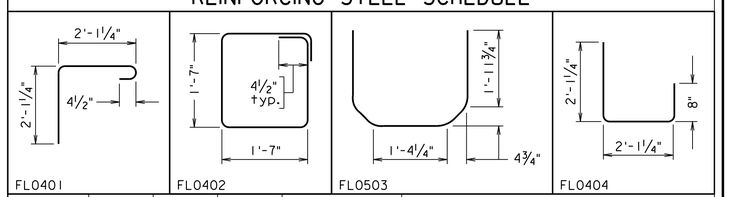

Mark	No.	Size	Pin ø	Length	Location
FL0401	4	#4	3"	4'-8"	Light base
FL0402	5	#4	2"	6'-8"	Light base
FL0503	5	#5	3¾"	6'-4"	Light base
FL0404	4	#4	2"	4'-9"	Light base
RG0401	⊙	#4			Concrete pedestal
RG0402	⊙	#4			Concrete pedestal
RT0601		#6	—	13'-0"	Top of deck slab

Dimensions in bending diagram are out-to-out of bars.

⊙ Bars RG0401 and RG0402 are detailed and accounted for on the railing detail sheet (CPSR-series).

JEREMY SCHLUSSEL
Lic. No. 033974
COMMONWEALTH OF VIRGINIA
PROFESSIONAL ENGINEER

Jeremy Schlussel
2022.07.08 18:57:26 -04'00'

WHITMAN REQUARDT & ASSOCIATES
RICHMOND, VA
STRUCTURAL ENGINEER

No.	Description	Date
Revisions		

COMMONWEALTH OF VIRGINIA
DEPARTMENT OF TRANSPORTATION

STRUCTURE AND BRIDGE DIVISION

BRIDGE LIGHTING SYSTEM
BPF-6
1 OF 2

Designed: CRR	Date	Plan No.	Sheet No.
Drawn: CRR	July 2022	257-38A	95 of 125
Checked: MRD			

Scale: 1" = 1'-0" unless otherwise shown.

© 2022, Commonwealth of Virginia

BCS-30A MOD.05-03-2018

257-38A_095.dgn

STATE	FEDERAL AID		STATE		SHEET NO.
	ROUTE	PROJECT	ROUTE	PROJECT	
VA.	—		95	0095-076-299, B688	95a

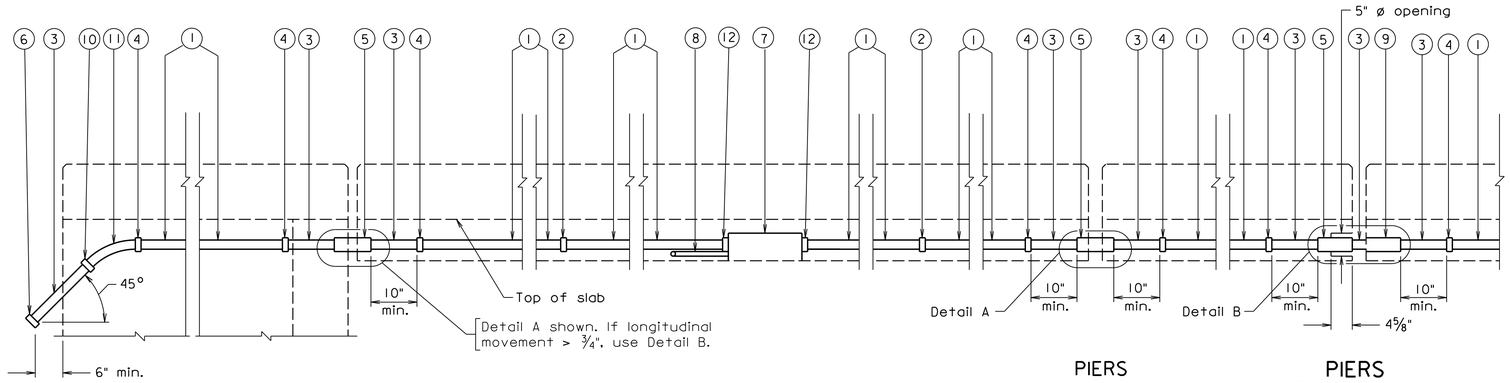

ABUTMENTS

PIERS
For longitudinal movement ≤ ¾"

PIERS
For longitudinal movement > ¾"

CONDUIT LAYOUT
Scale: ¾" = 1'-0"

1. 2" ø nonmetallic conduit
2. Nonmetallic coupling
3. 2" ø metal conduit
4. Adapter to connect nonmetallic conduit to metal conduit
5. Metal expansion and deflection fitting
6. 2" ø pipe cap
7. 8" x 6" x 1'-4" junction box
8. 1" ø galvanized steel pipe. Furnish locknut and bushing to connect conduit to junction box.
9. Metal expansion fitting
10. Pipe coupling
11. 2" ø 45° 13" R steel elbow
12. Bell fitting or bushing to connect conduit to junction box

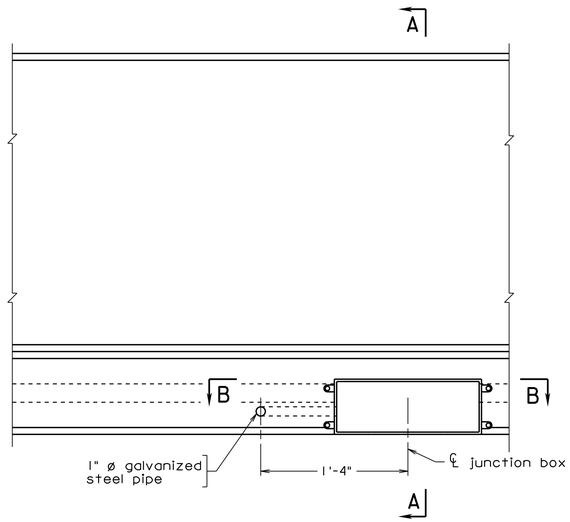

ELEVATION

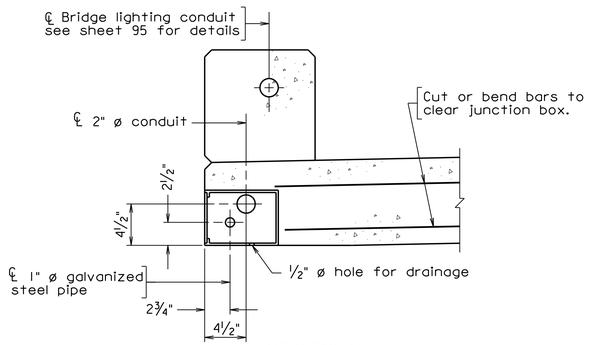

SECTION A-A

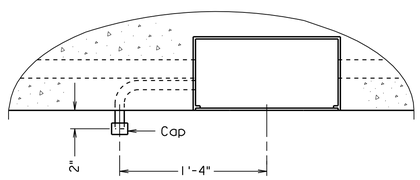

SECTION B-B

Abutment	Pier	Longitudinal Movement	t	Detail Type
A		¾	1/16	A
B		1⅞	⅛	B
	1	2	¼	B

When deck is continuous over pier, expansion and deflection fitting detail is not required.

Notes:

Close adherence to the manufacturer's requirements in regard to clearances for the installation of deflection fittings shall be observed.

Longitudinal movement is the maximum amount of movement of the expansion and deflection fitting calculated for placement at 60° F and shall be adjusted in accordance with manufacturer's requirements. The amount of movement shall be increased or decreased for every 10° F temperature drop or rise respectively by t.

The Contractor shall determine all dimensions and details necessary for installation.

Conduit shall be grounded in conformance with Section 700 with grounding materials that conform to Section 238.

Only one conduit per junction chamber. Use offset junction chambers for separate conduit runs.

For location of junction chambers, see sheet 69.

Scale: 1½" = 1'-0" unless otherwise shown.

© 2022, Commonwealth of Virginia

257-38A_095a.dgn

BCS-22A 10-31-2019

COMMONWEALTH OF VIRGINIA
JEREMY SCHLUSSEL
Lic. No. 033974
PROFESSIONAL ENGINEER

Jeremy Schlussel
2022.07.08 18:58:07 -04'00'

WHITMAN REQUARDT & ASSOCIATES
RICHMOND, VA
STRUCTURAL ENGINEER

Sealed and Signed by:
Junyi Meng
Lic. No. 033572
On the date of
October 31, 2019

A copy of the original sealed and signed standard drawing is on file in the Central Office.

VDOT S&B DIVISION
RICHMOND, VA
STRUCTURAL ENGINEER

No.	Description	Date
Revisions		

COMMONWEALTH OF VIRGINIA
DEPARTMENT OF TRANSPORTATION

STRUCTURE AND BRIDGE DIVISION

BRIDGE LIGHTING SYSTEM BPF-6 2 OF 2

Designed: S&B Div	Date	Plan No.	Sheet No.
Drawn: S&B Div	July 2022	257-38A	95a of 125
Checked: S&B Div			

STATE	FEDERAL AID		STATE		SHEET NO.
	ROUTE	PROJECT	ROUTE	PROJECT	
VA.	—		95	0095-076-299, B688	96

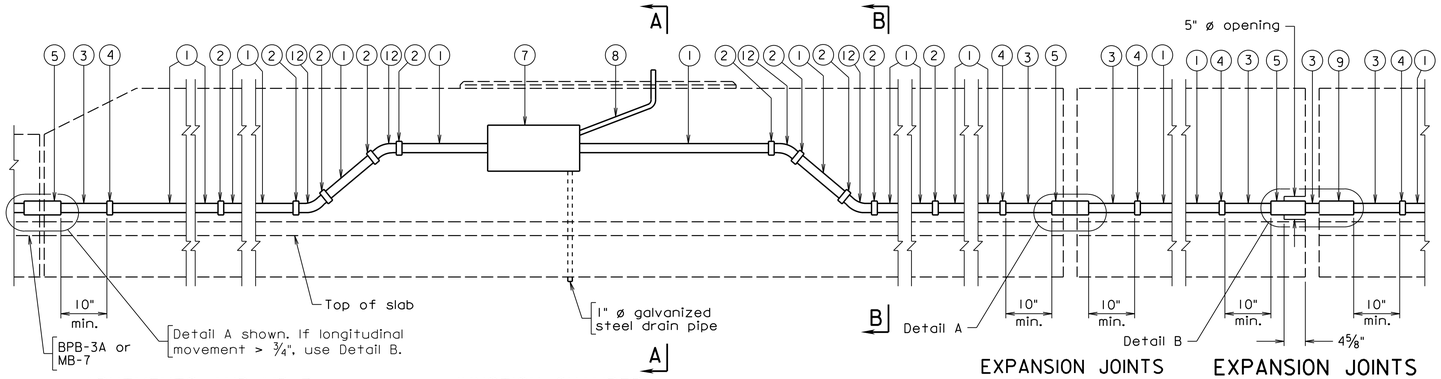

ABUTMENTS AND MB-7 JUNCTION CHAMBER

Blister shown and shall be used at lightpole anchorage locations as noted in the plans. Junction chambers not located at lightpole anchorage locations shall not have a blister.

EXPANSION JOINTS
For longitudinal movement ≤ ¾"

EXPANSION JOINTS
For longitudinal movement > ¾"

CONDUIT LAYOUT

Scale: ¾" = 1'-0"

1. 2" ø nonmetallic conduit
2. Nonmetallic coupling
3. 2" ø metal conduit
4. Adapter to connect nonmetallic conduit to metal conduit
5. Metal expansion and deflection fitting
6. omitted
7. 8" x 6" x 1'-4" formed junction chamber
8. 1" ø metal conduit.
9. Metal expansion fitting
10. Pipe coupling
11. 2" ø 45° 13" R steel elbow
12. 2" ø 45° 9½" R nonmetallic elbow

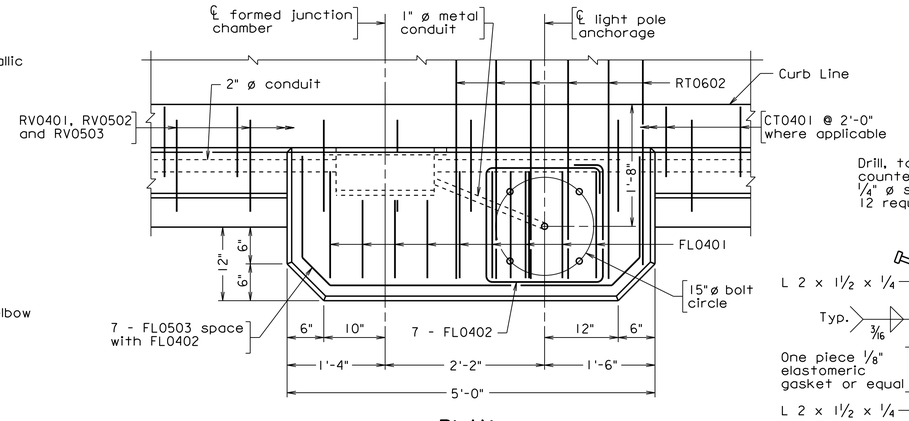

PLAN

Abutment	Pier	Longitudinal Movement	t	Detail Type
C		¾	1/16	**
Moment Slab		*	*	*

When at moment slab contraction joints, expansion and deflection fitting detail is not required.

*Longitudinal movement and t shall be determined by MSE fabricator.

**An approved rubber coupler shall be used at Abutment C to allow for longitudinal movement noted in above table and ⅝ inches of transverse movement.

JUNCTION CHAMBER FRAME

Scale: 3" = 1'-0"

SECTION A-A
At lightpole anchorage

Adjust conduit as necessary to clear lightpole anchorage.

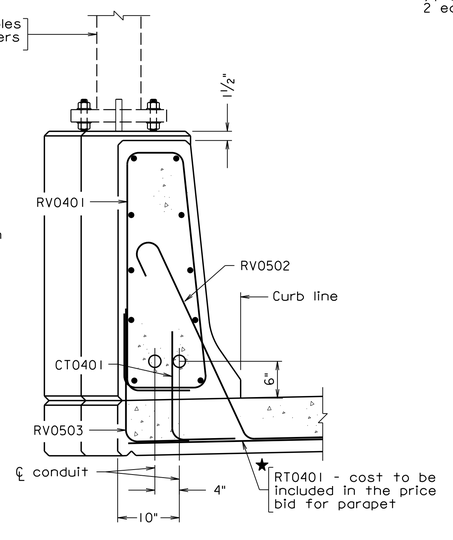

SECTION B-B

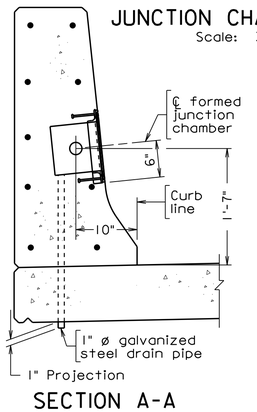

SECTION A-A
Not at lightpole anchorage

Scale: 1" = 1'-0" unless otherwise shown.

© 2022, Commonwealth of Virginia

Notes:

All reinforcing bars shall be corrosion resistant reinforcing steel - class II.

Cut or bend bars to clear junction chamber.

Close adherence to the manufacturer's requirements in regard to clearances for the installation of deflection fittings shall be observed.

Junction chamber frame and cover to be galvanized, after fabrication, in accordance with ASTM A123.

Anchor bolt specifications:

Nuts (Top): ASTM F467 Alloy 6262-T9 or 6061-T6.
(Bottom): ASTM A563.
Thread series for all nuts to be UNC-2B.
Washers: (Top): ASTM B209 Alloy Alclad 2024-T3 or T4, 2¼" ø x 0.165".
(Bottom): ASTM F844.
Rods: 1" diameter, ASTM A276, type 430 or 410 annealed, hot-finished. Threads on rods may be rolled or cut. 3½" at each end of rod shall be threaded. Each rod shall be supplied with 3 washers and 3 nuts.

In the designations noted above, top refers to hardware above the top of baseplate. Bottom refers to hardware below the baseplate including embedment in concrete.

Longitudinal movement is the maximum amount of movement of the expansion and deflection fitting calculated for placement at 60° F and shall be adjusted in accordance with manufacturer's requirements. The amount of movement shall be increased or decreased for every 10° F temperature drop or rise respectively by t.

All joints in parapet shall have a Detail A expansion and deflection fitting with ¾ inches of longitudinal movement except as noted in the table.

The Contractor shall determine all dimensions and details necessary for installation.

Conduit shall be grounded in conformance with Section 700 with grounding materials that conform to Section 238.

Cost of Bridge Conduit System and anchorages shall be included in price bid for Bridge Lighting System.

Only one conduit per junction chamber. Use offset junction chambers for separate conduit runs.

For location of junction chambers, see sheets 121 and 122.

REINFORCING STEEL SCHEDULE

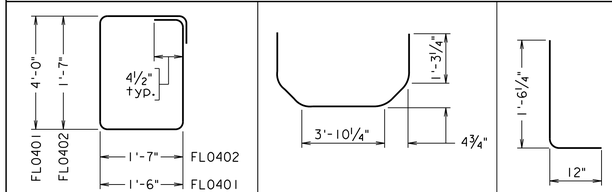

Mark	No.	Size	Pin ø	Length	Location
FL0401	45	#4	2"	11'-4"	Light base
FL0402	35	#4	2"	6'-8"	Light base
FL0503	35	#5	3¾"	7'-5"	Light base
CT0401		#4	3"	2'-5"	Conduit tie
RV0401	⊙	#4			
RV0502	⊙	#5			
RV0503	⊙	#5			
★RT0401	⊙	#4			
RT0602		#6	—	***	Top of deck slab

Dimensions in bending diagram are out-to-out of bars.

⊙ Bars RV0401, RV0502, RV0503 and RT0401 are detailed and accounted for on parapet detail sheet.

★ Used only when deck transverse reinforcement is parallel to skew of bridge

***Length of RT0601 bar to be width of moment slab minus clear cover.

No.	Description	Date
Revisions		

COMMONWEALTH OF VIRGINIA
DEPARTMENT OF TRANSPORTATION

STRUCTURE AND BRIDGE DIVISION

BRIDGE LIGHTING SYSTEM BPB-4

Designed: CRR	Date	Plan No.	Sheet No.
Drawn: CRR	July 2022	257-38A	96 of 125
Checked: MRD			

BCS-28A 10-31-2019 257-38A_096.dgn

COMMONWEALTH OF VIRGINIA
JEREMY SCHLUSSEL
Lic. No. 033974
PROFESSIONAL ENGINEER

Jeremy Schlussel
2022.07.08 18:57:05 -04'00'

WHITMAN REQUARDT & ASSOCIATES
RICHMOND, VA
STRUCTURAL ENGINEER

STATE	FEDERAL AID		STATE		SHEET NO.
	ROUTE	PROJECT	ROUTE	PROJECT	
VA.	—		95	0095-076-299, B688	97

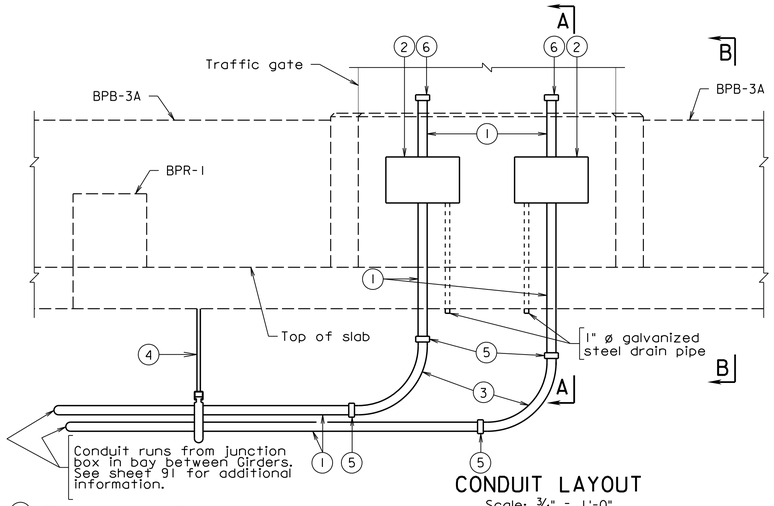

CONDUIT LAYOUT

Scale: 3/4" = 1'-0"

1. 2" ø metal conduit
2. 8" x 6" x 12" formed junction chamber
3. 2" ø 90° steel elbow
4. Galvanized strut channel support and steel rod
5. Metallic coupling
6. 2" ø pipe cap

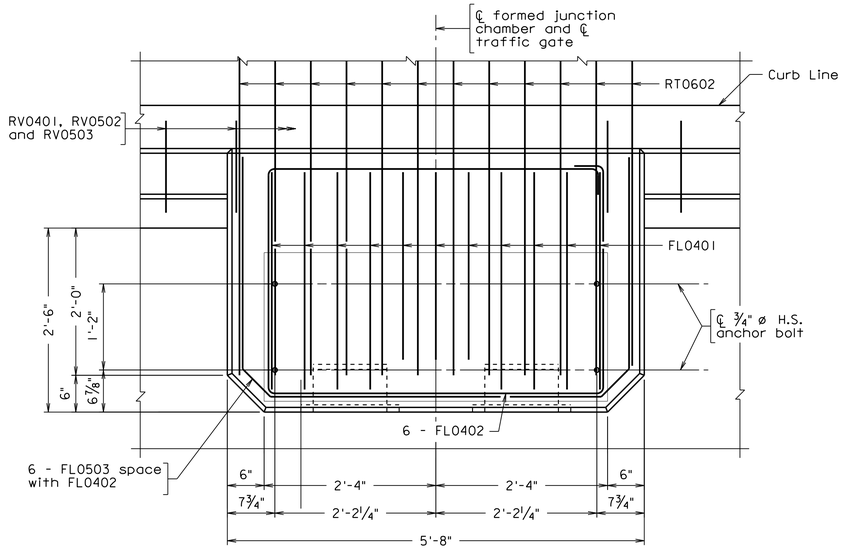

PLAN

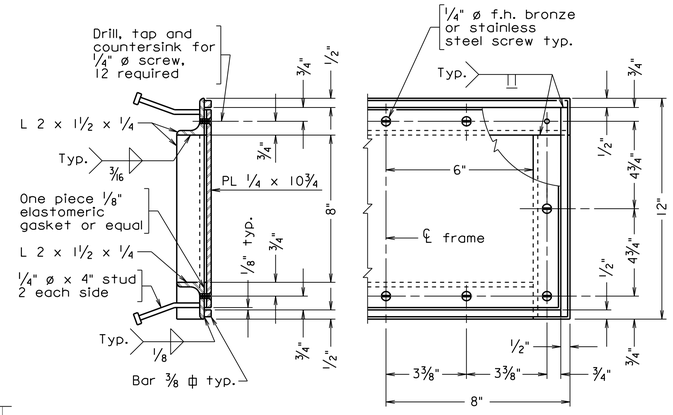

JUNCTION CHAMBER FRAME

Scale: 3" = 1'-0"

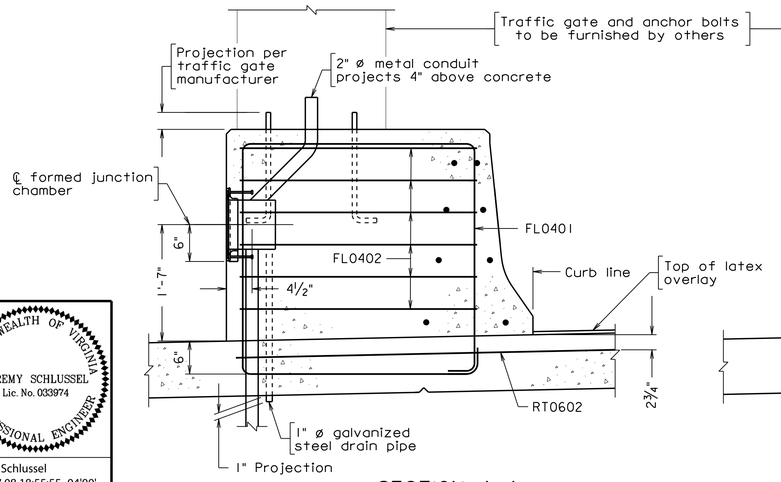

SECTION A-A

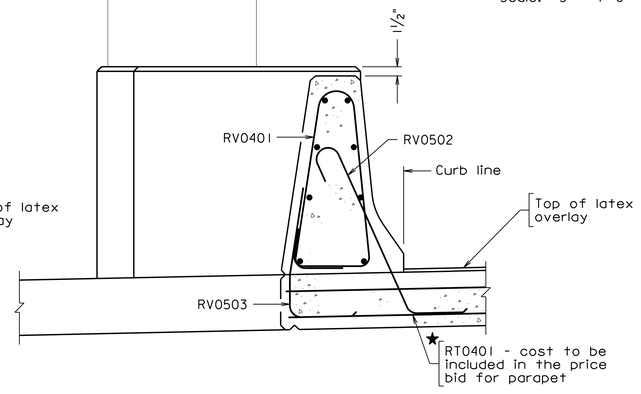

SECTION B-B

Scale: 1" = 1'-0" unless otherwise shown.

Notes:

All reinforcing bars shall be corrosion resistant reinforcing steel - Class II.

Cut or bend bars to clear junction chamber.

Close adherence to the manufacturer's requirements in regard to clearances for the installation of deflection fittings shall be observed.

Junction chamber frame and cover to be galvanized, after fabrication, in accordance with ASTM A123.

The Contractor shall determine all dimensions and details necessary for installation.

Strut channel support, steel rod and hardware shall be hot dipped galvanized in accordance with Section 233 of the Specifications.

Strut channel support and steel rod shall be attached to underside of deck by a VDOT approved threaded insert.

Strut channel support shall be per manufacturer's recommendations to support conduit.

Conduit and traffic gate shall be grounded in conformance with Section 700 with grounding materials that conform to Section 238.

Traffic gate shall be supplied by others. Anchor bolt locations shall be per traffic gate manufacturer's recommendations.

Traffic gate conduit and traffic gate blister shall be paid for as Bridge Conduit System.

Only one conduit per junction chamber. Use offset junction chambers for separate conduit runs.

For location of junction chambers, see sheet 69.

REINFORCING STEEL SCHEDULE

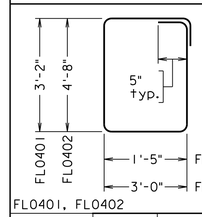

FL0401, FL0402

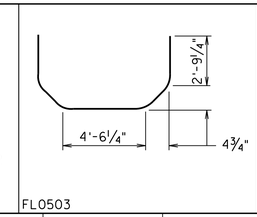

FL0503

Mark	No.	Size	Pin ø	Length	Location
FL0401		#4	2"	12'-8 7/8"	Blister
FL0402		#4	2"	12'-6 7/8"	Blister
FL0503		#5	3 3/4"	11'-0 7/8"	Blister
RV0401	⊙	#4			
RV0502	⊙	#5			
RV0503	⊙	#5			
★RT0401	⊙	#4			
RT0602		#6	—		Top of deck slab

Dimensions in bending diagram are out-to-out of bars.

⊙ Bars RV0401, RV0502, RV0503 and RT0401 are detailed and accounted for on parapet detail sheet.

★ Used only when deck transverse reinforcement is parallel to skew of bridge

COMMONWEALTH OF VIRGINIA
JEREMY SCHLUSSEL
Lic. No. 033974
PROFESSIONAL ENGINEER

Jeremy Schlussel
2022.07.08 18:55:55 -04'00'

WHITMAN REQUARDT & ASSOCIATES
RICHMOND, VA
STRUCTURAL ENGINEER

No.	Description	Date
	Revisions	

COMMONWEALTH OF VIRGINIA
DEPARTMENT OF TRANSPORTATION

STRUCTURE AND BRIDGE DIVISION

TRAFFIC GATE BLISTER AND CONDUIT SYSTEM

Designed: MRD	Date	Plan No.	Sheet No.
Drawn: MRD	July 2022	257-38A	97 of 125
Checked: WRA			

© 2022, Commonwealth of Virginia

257-38A_097.dgn

STATE	FEDERAL AID		STATE		SHEET NO.
	ROUTE	PROJECT	ROUTE	PROJECT	
VA.	—		95	0095-076-299, B688	97a

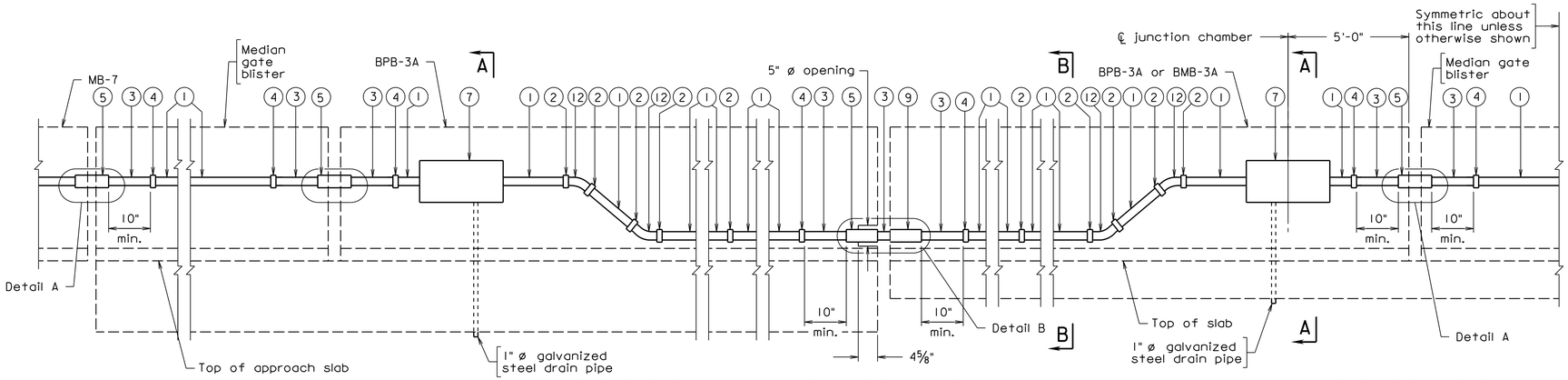

ABUTMENT B

EXPANSION JOINTS
For longitudinal movement > ¾"

EXPANSION JOINTS
For longitudinal movement ≤ ¾"

CONDUIT LAYOUT
Scale: ¾" = 1'-0"

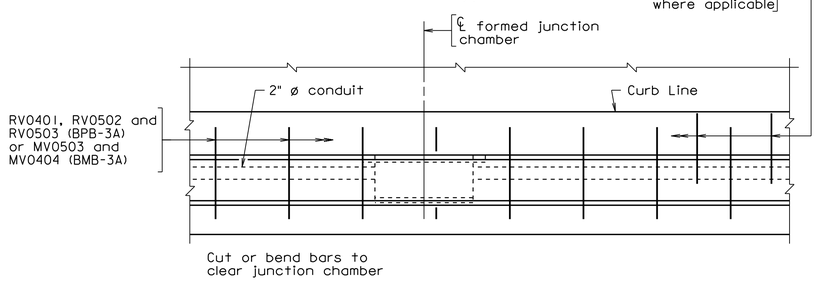

PLAN
Scale: 1" = 1'-0"

1. 3" ø nonmetallic conduit
2. Nonmetallic coupling
3. 3" ø metal conduit
4. Adapter to connect nonmetallic conduit to metal conduit
5. Metal expansion and deflection fitting
6. omitted
7. 8" x 8" x 1'-4" formed junction chamber
8. 1" ø metal conduit
9. Metal expansion fitting
10. Pipe coupling
11. omitted
12. 3" ø 45° 13" R nonmetallic elbow

Abutment	Pier	Longitudinal Movement	†	Detail Type
B		1⅞	⅛	B

When deck is continuous over pier, expansion and deflection fitting detail is not required.

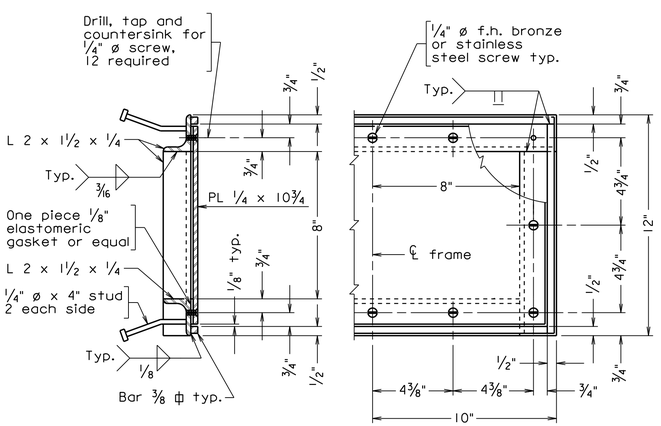

JUNCTION CHAMBER FRAME
Scale: 3" = 1'-0"

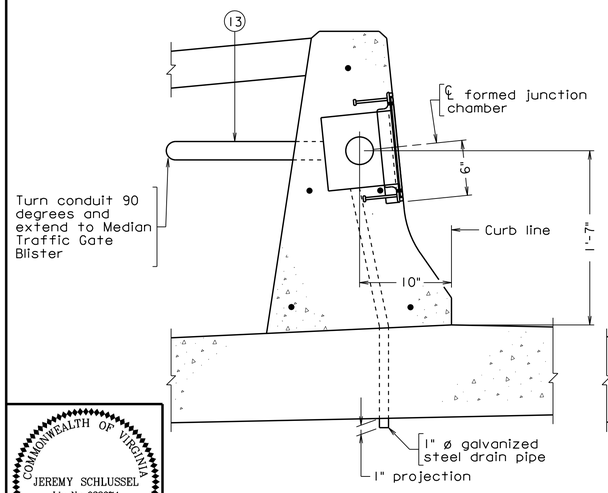

SECTION A-A
Scale: 1½" = 1'-0"
BPB-3A shown, BMB-3A similar.

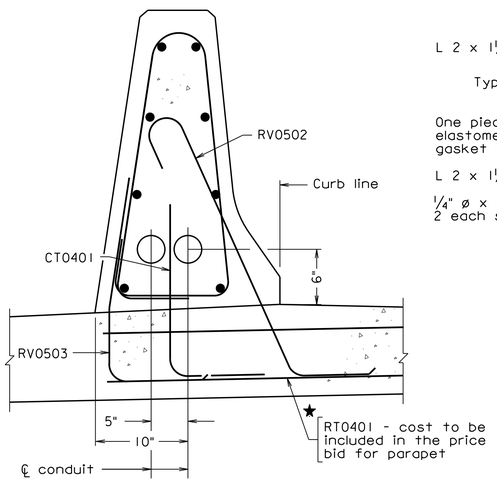

SECTION B-B
Scale: 1½" = 1'-0"

Notes:

Close adherence to the manufacturer's requirements in regard to clearances for the installation of deflection fittings shall be observed.

Junction chamber frame and cover to be galvanized, after fabrication, in accordance with ASTM A123.

Longitudinal movement is the maximum amount of movement of the expansion and deflection fitting calculated for placement at 60° F and shall be adjusted in accordance with manufacturer's requirements. The amount of movement shall be increased or decreased for every 10° F temperature drop or rise respectively by †.

The Contractor shall determine all dimensions and details necessary for installation.

Conduit shall be grounded in conformance with Section 700 with grounding materials that conform to Section 238.

All joints in parapet shall have a Detail A expansion and deflection fitting with ¾ inches of longitudinal movement except as noted in the table.

For additional details of conduit in Median Gate Blister, see sheet 72.

For details of conduit in MB-7, see roadway plans.

Only one conduit per junction chamber. Use offset junction chambers for separate conduit runs.

For location of junction chambers, see sheet 69.

REINFORCING STEEL SCHEDULE

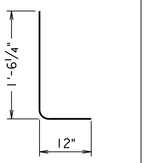

CT0401

Mark	No.	Size	Pin ø	Length	Location
CT0401	·	#4	3"	2'-5"	Conduit tie
RV0401	⊙	#4	·	·	·
RV0502	⊙	#5	·	·	·
RV0503	⊙	#5	·	·	·
★RT0401	⊙	#4	·	·	·
·	·	·	·	·	·

Dimensions in bending diagram are out-to-out of bars.

⊙ Bars RV0401, RV0502, RV0503 and RT0401 are detailed and accounted for on parapet detail sheet.

★ Used only when deck transverse reinforcement is parallel to skew of bridge

COMMONWEALTH OF VIRGINIA
JEREMY SCHLUSSEL
Lic. No. 033974
PROFESSIONAL ENGINEER

Jeremy Schlussel
2022.07.08 18:56:16 -04'00'

WHITMAN REQUARDT & ASSOCIATES
RICHMOND, VA
STRUCTURAL ENGINEER

No.	Description	Date
	Revisions	

COMMONWEALTH OF VIRGINIA
DEPARTMENT OF TRANSPORTATION

STRUCTURE AND BRIDGE DIVISION

MEDIAN TRAFFIC GATE CONDUIT SYSTEM

Designed: MRD	Date	Plan No.	Sheet No.
Drawn: MRD	July 2022	257-38A	97a of 125
Checked: WRA			

Scale as noted

© 2022, Commonwealth of Virginia

BCS-29A MOD. 10-31-2019

257-38A_097a.dgn

STATE	FEDERAL AID		STATE		SHEET NO.
	ROUTE	PROJECT	ROUTE	PROJECT	
VA.	—		95	0095-076-299, B688	98

REINFORCING STEEL SCHEDULE

MARK	NO.	BAR SIZE	PIN DIA. FT.-IN.	LENGTH FT.-IN.	WEIGHT (LBS.)	LOCATION
				Superstructure CRR Reinforcing Steel Class II		
SC0501	1522	05		22-6	35718	Deck
SC0502	1522	05		11-0	17462	Deck
SC0503	759	05		8-5	6663	Deck
SC0504	1220	05		12-4	15693	Deck
SC0505	1220	05		5-8	7211	Deck
SC0506	102	05		12-6 TO 42-6	2926	Deck
SC0507	120	05		52-4	6550	Deck
SC0508	72	05		13-1 1/2 TO 35-3	1816	Deck
SC0509	112	05		8-3	964	Deck/Traffic gate blister
SC0510	4	05	0-3 3/4	26-1 1/8	109	Deck/Traffic gate blister
SH0501	6	05		59-11 1/2	375	Deck
SH0502	5	05		44-11 5/8	235	Deck
SH0503	65	05		4-7	311	Deck
SL0401	896	04		60-0	35912	Deck
SL0402	128	04		48-6	4147	Deck
SL0403	128	04		16-0	1368	Deck
SL0404	2	04		60-0	80	Deck
SL0405	2	04		38-0	51	Deck
SL0406	48	04		12-2	390	Deck/Traffic gate blister
SL0501	294	05		60-0	18399	Deck
SR0501	148	05		21-6 TO 46-4	5236	Deck
SR0502	54	05		39-6	2225	Deck
SR0503	126	05		10-0	1314	Deck
ES0601	148	06	0-3 3/4	4-0 7/8	904	Deck
ES0602	182	06	0-3 3/4	7-11 3/4	2180	Deck
ES0603	58	06	0-4 1/2	7-6 1/4 TO 7-10 7/8	671	
ET0501	28	05		25-1	733	Deck
ET0502	28	05		33-6	978	Deck
ET0503	4	05		36-10	154	Deck
BL0401	48	04		40-0	1283	Bolster
BL0402	4	04		32-6	87	Bolster
BL0403	4	04		15-2	41	Bolster
MT0401	1	04		13-0	9	Median
MT0402	29	04		13-1 TO 16-5	286	Median
MT0403	63	04		16-6	694	Median
MT0404	14	04		15-9 TO 16-9	152	Median
MT0405	2	04		15-5	21	Median
MT0406	43	04		3-6 TO 17-5	300	Median
ML0401	30	04		54-6	1092	Median
ML0402	13	04		11-0	96	Median
ML0403	13	04		19-0 TO 47-3	288	Median
ML0404	4	04		28-9 TO 54-3	111	Median
ML0405	1	04	0-3	59-9 3/4	40	Median
ML0406	1	04		60-0	40	Median
ML0407	3	04		3-4 TO 13-3	17	Median
ML0408	1	04		37-3	25	Median
MN0401	1	04	1-6	6-10 7/8	5	Median
CS0401	6	04	0-2	4-7 7/8	19	Cabinet Foundation
CS0402	4	04	0-2	7-1 7/8	19	Cabinet Foundation
CS0403	8	04		2-5	13	Cabinet Foundation
CS0504	16	05		3-0	50	Cabinet Foundation
CS0405	6	04	0-2	3-9 7/8	15	SE-5 Foundation
CS0406	2	04	0-2	6-7 7/8	9	SE-5 Foundation
CS0407	8	04		1-0	5	SE-5 Foundation
SE0501	22	05		25-1	576	Deck joint
SE0502	22	05		33-6	769	Deck joint
SE0503	123	05		3-8	470	Deck joint
EL0601	182	06		2-9	751	
			TOTAL WEIGHT IN PRECEDING GROUP OF BARS		178058	

DIMENSION TABLE

MARK	TYPE	A FT.-IN.	B FT.-IN.	C FT.-IN.	D FT.-IN.	E P FT.-IN.	F Q FT.-IN.	G R FT.-IN.	H FT.-IN.	I S FT.-IN.	J T FT.-IN.	K U FT.-IN.	L FT.-IN.	V FT.-IN.	N FT.-IN.
SC0501	1	22-6													
SC0502	1	11-0													
SC0503	1	8-5													
SC0504	1	12-4													
SC0505	1	5-8													
SC0506	1	VARY													
SC0507	1	52-4													
SC0508	1	VARY													
SC0509	1	8-3													
SC0510	20	6-0			7-4 1/2	2-5	2-5	3-5							
SH0501	54	60-0						39-10 3/8							
SH0502	54	45-0						42-11 1/4							
SH0503	1	4-7													
SL0401	1	60-0													
SL0402	1	48-6													
SL0403	1	16-0													
SL0404	1	60-0													
SL0405	1	38-0													
SL0406	1	12-2													
SL0501	1	60-0													
SR0501	1	VARY													
SR0502	1	39-6													
SR0503	1	10-0													
ES0601	7		0-8 1/4	2-0	1-8										
ES0602	7		0-8 1/4	5-11	1-8										
ES0603	7		VARY	4-6	2-6										
ET0501	1	25-1													
ET0502	1	33-6													
ET0503	1	36-10													
BL0401	1	40-0													
BL0402	1	32-6													
BL0403	1	15-2													
MT0401	1	13-0													
MT0402	1	VARY													
MT0403	1	16-6													
MT0404	1	VARY													
MT0405	1	15-5													
MT0406	1	VARY													
ML0401	1	54-6													
ML0402	1	11-0													
ML0403	1	VARY													
ML0404	1	VARY													
ML0405	2	29-11				3-5	29-8 1/4	29-10 3/4							
ML0406	1	60-0													
ML0407	1	VARY													
ML0408	1	37-3													
MN0401	45	3-1	3-1	1-5											
CS0401	7		2-8	1-1	1-1										
CS0402	7		2-9	2-3 1/2	2-3 1/2										
CS0403	1	2-5													
CS0504	1	3-0													
CS0405	7		1-6	1-3	1-3										
CS0406	51		1-7	1-7					0-4 1/2						
CS0407	1	1-0													
SE0501	1	25-1													
SE0502	1	33-6													
SE0503	1	3-8													
EL0601	1	2-9													

DIMENSION VARIATION TABLE

MARK	NO. EA. LEN.	DIMEN-SION	FROM FT.-IN.	TO FT.-IN.	VARY BY FT.-IN.	DIMEN-SION	FROM FT.-IN.	TO FT.-IN.	VARY BY FT.-IN.
SC0506	2	A	12-6	42-6	0-7 1/4				
SC0508	2	A	13-1 1/2	35-3	0-7 5/8				
SR0501	4	A	21-6	46-4	0-8 1/4				
ES0603	2	B	0-10	1-2 5/8	0-0 1/8				
MT0402	1	A	13-1	16-5	0-1 3/8				
MT0404	1	A	15-9	16-9	0-0 7/8				
MT0406	1	A	3-6	17-5	0-4				
ML0403	1	A	19-0	47-3	2-4 1/4				
ML0404	1	A	28-9	54-3	8-6				
ML0407	1	A	3-4	13-3	4-11 1/2				

BENDING DIAGRAM

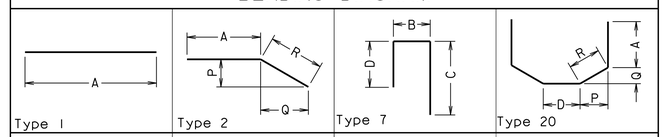

NOTES:

Dimensions in Bending Diagram are out-to-out of bars.

Weights in schedule are based on density of 490 lb/ft.^{3}

SC05 and SE05 mechanical coupler bars not shown. Number and lengths to be determined by the Contractor.

COMMONWEALTH OF VIRGINIA
JEREMY SCHLUSSEL
Lic. No. 033974
PROFESSIONAL ENGINEER
Jeremy Schlussel
2022.07.08 18:56:40 -04'00'
WHITMAN REQUARDT & ASSOCIATES
RICHMOND, VA
STRUCTURAL ENGINEER

No.	Description	Date
	Revisions	

© 2022, Commonwealth of Virginia

COMMONWEALTH OF VIRGINIA
DEPARTMENT OF TRANSPORTATION

STRUCTURE AND BRIDGE DIVISION

REINFORCING STEEL SCHEDULE SUPERSTRUCTURE

Designed: AC	Date	Plan No.	Sheet No.
Drawn: MWL	July 2022	257-38A	98 of 125
Checked: WRA			

257-38A_098.dgn

STATE	FEDERAL AID		STATE		SHEET NO.
	ROUTE	PROJECT	ROUTE	PROJECT	
VA.	—		95	0095-076-299, B688	99

REINFORCING STEEL SCHEDULE

MARK	NO.	BAR SIZE	PIN DIA. FT.-IN.	LENGTH FT.-IN.	WEIGHT (LBS.)	LOCATION
				ABUTMENT A		
				Footing - Black Reinforcing Steel		
AF0401	8	04	1-3	7-0 3/8	38	Footing
AF0602	14	06		1-9	37	Footing
AF0603	28	06		4-6	189	Footing
AF0604	18	06		8-6	230	Footing
AF0405	28	04		2-6	47	Footing
AF0506	17	05	0-3 3/4	4-3 7/8	77	Footing
			TOTAL WEIGHT IN PRECEDING GROUP OF BARS		618	
				Neat - CRR Reinforcing Steel Class 1		
AB0501	4	05		3-0	13	Backwall
AB0502	4	05		2-6	10	Backwall
AB0503	4	05		2-0	8	Backwall
AH0401	2	04		10-1	13	Seat/Backwall
AH0402	6	04		10-4	41	Seat/Backwall
AH0403	4	04		11-0	29	Seat/Backwall
AH0404	2	04		11-3	15	Seat/Backwall
AH0605	2	06		12-7	38	Backwall
AH0606	6	06		1-6	14	Seat/Backwall
AH0607	12	06		40-0	720	Backwall
AN0501	3	05	0-3 3/4	7-6 5/8	24	Seat
AP0401	15	04	0-3	4-6 1/4	45	Seat
AP0602	4	06		3-3 1/2	20	Seat
AP0603	4	06		3-0	18	Seat
AS0601	4	06		10-1	61	Seat
AV0401	19	04	0-3	4-8 3/4	60	Seat
AV0402	1	04	0-3	6-2 1/2	4	Seat
AV0403	2	04	0-3	5-9 3/4	8	Seat
AV0405	9	04		6-3	38	Backwall
AV0506	17	05	0-3 3/4	7-5 3/4	133	Backwall
AV0407	1	04		6-5	4	Backwall
AV0508	3	05	0-3 3/4	7-8 1/4	24	Backwall
AV0409	1	04		2-9	2	Backwall
AV0410	2	04	0-3	3-11 1/4	5	Backwall
AW0501	10	05		11-0	115	Wingwall
AW0502	9	05	0-3 3/4	4-11 7/8	47	Wingwall
AW0503	9	05		4-6	42	Wingwall
AW0504	4	05	0-3 3/4	5-5 3/8	23	Wingwall
AW0405	12	04	0-2	2-8	21	Wingwall
AW0406	6	04	0-2	2-2	9	Wingwall
AW0407	3	04		8-0	16	Wingwall
AW0408	3	04	0-3	9-2 1/8	18	Wingwall
AW0609	3	06		8-0	36	Wingwall
AW0610	3	06	0-4 1/2	10-5 1/2	47	Wingwall
AW0411	13	04	0-2	4-4 7/8	38	Wingwall
			TOTAL WEIGHT IN PRECEDING GROUP OF BARS		1759	

DIMENSION TABLE

MARK	TYPE	A FT.-IN.	B FT.-IN.	C FT.-IN.	D FT.-IN.	E P FT.-IN.	F Q FT.-IN.	G R FT.-IN.	H FT.-IN.	I S FT.-IN.	J T FT.-IN.	K U FT.-IN.	L FT.-IN.	V FT.-IN.	N FT.-IN.
AF0401	45	3-2	3-2	1-4											
AF0602	1	1-9													
AF0603	1	4-6													
AF0604	1	8-6													
AF0405	1	2-6													
AF0506	24	3-9							0-5						
AB0501	1	3-0													
AB0502	1	2-6													
AB0503	1	2-0													
AH0401	1	10-1													
AH0402	1	10-4													
AH0403	1	11-0													
AH0404	1	11-3													
AH0605	1	12-7													
AH0606	1	1-6													
AH0607	1	40-0													
AN0501	22	2-6			2-6	3-1	0-1 1/2	3-1							
AP0401	30		3-1 1/2	1-0					0-4 1/2						
AP0602	1	3-3 1/2													
AP0603	1	3-0													
AS0601	1	10-1													
AV0401	30		3-1	1-3					0-4 1/2						
AV0402	30		3-1	2-8 3/4					0-4 1/2						
AV0403	30		3-1	2-4					0-4 1/2						
AV0405	1	6-3													
AV0506	30		1-1	5-11 1/2					0-5						
AV0407	1	6-5													
AV0508	30		1-1	6-2					0-5						
AV0409	1	2-9													
AV0410	30		1-1	2-5 1/2					0-4 1/2						
AW0501	1	11-0													
AW0502	2	3-0				0-8 1/8	1-10 5/8	2-0							
AW0503	1	4-6													
AW0504	7		1-2 1/2	2-3	2-3										
AW0405	6		1-3	1-6											
AW0406	6		0-9	1-6											
AW0407	1	8-0													
AW0408	2	5-1				0-7 1/8	4-0 5/8	4-1 1/8							
AW0609	1	8-0													
AW0610	4	2-3 1/2				0-11	3-10 7/8	4-0					0-4 7/8	4-1 7/8	4-2 1/8
AW0411	7		0-7	2-0	2-0										

DIMENSION VARIATION TABLE

MARK	NO. EA. LEN.	DIMENSION	FROM FT.-IN.	TO FT.-IN.	VARY BY FT.-IN.	DIMENSION	FROM FT.-IN.	TO FT.-IN.	VARY BY FT.-IN.

BENDING DIAGRAM

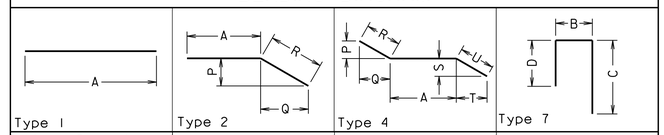

NOTES:

Dimensions in Bending Diagram are out-to-out of bars.

Weights in schedule are based on density of 490 lb/ft^3.

COMMONWEALTH OF VIRGINIA
JEREMY SCHLUSSEL
Lic. No. 033974
PROFESSIONAL ENGINEER

Jeremy Schlussel
2022.07.08 19:00:16 -04'00'

WHITMAN REQUARDT & ASSOCIATES
RICHMOND, VA
STRUCTURAL ENGINEER

© 2022. Commonwealth of Virginia

No.	Description	Date
	Revisions	

COMMONWEALTH OF VIRGINIA
DEPARTMENT OF TRANSPORTATION

STRUCTURE AND BRIDGE DIVISION

REINFORCING STEEL SCHEDULE
ABUTMENT A

Designed: AC	Date	Plan No.	Sheet No.
Drawn: MWL	July 2022	257-38A	99 of 125
Checked: WRA			

257-38A_099.dgn

STATE	FEDERAL AID		STATE		SHEET NO.
	ROUTE	PROJECT	ROUTE	PROJECT	
VA.	—		95	0095-076-299, B688	100

REINFORCING STEEL SCHEDULE

MARK	NO.	BAR SIZE	PIN DIA. FT.-IN.	LENGTH FT.-IN.	WEIGHT (LBS.)	LOCATION
				ABUTMENT B		
				Footing - Black Reinforcing Steel		
AF0401	8	04	1-3	7-0 3/8	38	Footing
AF0602	18	06		1-9	47	Footing
AF0603	25	06		4-6	169	Footing
AF0604	17	06		8-1	206	Footing
AF0405	26	04		2-9	48	Footing
AF0506	17	05	0-3 3/4	4-6 7/8	81	Footing
			TOTAL WEIGHT IN PRECEDING GROUP OF BARS		589	
				Neat - CRR Reinforcing Steel Class 1		
AH0401	1	04		9-2	6	Seat/Backwall
AH0402	13	04		11-0	96	Seat/Backwall
AH0603	14	06		40-0	841	Backwall
AN0501	2	05	0-3 3/4	7-6 5/8	16	Seat
AP0401	14	04	0-3	5-0 3/4	47	Seat
AP0602	8	06		2-6	30	Seat
AS0601	4	06		9-2	55	Seat
AV0401	17	04	0-3	4-8 3/4	54	Seat
AV0402	1	04	0-3	5-9 3/4	4	Seat
AV0403	9	04		6-3	38	Backwall
AV0404	1	04		6-2	4	Backwall
AV0505	17	05	0-3 3/4	7-8 1/4	136	Backwall
AV0506	3	05	0-3 3/4	7-7 1/4	24	Backwall
AW0401	12	04	0-2	2-2	17	Wingwall
AW0402	6	04	0-2	2-8	11	Wingwall
AW0403	3	04		8-0	16	Wingwall
AW0404	3	04	0-3	9-0 7/8	18	Wingwall
AW0605	3	06		8-0	36	Wingwall
AW0606	3	06	0-4 1/2	10-5 1/2	47	Wingwall
AW0407	3	04	0-3	11-10 3/8	24	Wingwall
AW0408	7	04	0-3	12-6	58	Wingwall
AW0409	6	04	0-3	6-0	24	Wingwall
AW0410	6	04		10-5 1/2	42	Wingwall
AW0411	4	04	0-3	13-0 1/2	35	Wingwall
			TOTAL WEIGHT IN PRECEDING GROUP OF BARS		1679	

DIMENSION TABLE

MARK	TYPE	A FT.-IN.	B FT.-IN.	C FT.-IN.	D FT.-IN.	E P FT.-IN.	F Q FT.-IN.	G R FT.-IN.	H FT.-IN.	I S FT.-IN.	J T FT.-IN.	K U FT.-IN.	L FT.-IN.	V FT.-IN.	N FT.-IN.
AF0401	45	3-2	3-2	1-4											
AF0602	1	1-9													
AF0603	1	4-6													
AF0604	1	8-1													
AF0405	1	2-9													
AF0506	24	4-0							0-5						
AH0401	1	9-2													
AH0402	1	11-0													
AH0603	1	40-0													
AN0501	22	2-6			2-6	3-1	0-1 1/2	3-1							
AP0401	30		3-1	1-7					0-4 1/2						
AP0602	1	2-6													
AS0601	1	9-2													
AV0401	30		3-1	1-3					0-4 1/2						
AV0402	30		3-1	2-4					0-4 1/2						
AV0403	1	6-3													
AV0404	1	6-2													
AV0505	30		1-0	6-3					0-5						
AV0506	30		1-0	6-2					0-5						
AW0401	6		0-9	1-6											
AW0402	6		1-3	1-6											
AW0403	1	8-0													
AW0404	2	4-11 3/4				0-7 1/8	4-0 5/8	4-1 1/8							
AW0605	1	8-0													
AW0606	4	2-3 1/2				0-11	3-10 7/8	4-0		0-4 7/8	4-1 7/8	4-2 1/8			
AW0407	22	5-3			5-3	1-9 1/2	0-1	1-9 1/2							
AW0408	69	5-3	2-6	2-8	1-9 1/2	0-8 1/2									
AW0409	7		1-8 1/2	2-3	2-3										
AW0410	1	10-5 1/2													
AW0411	7		1-9 1/2	10-5 1/2	1-0										

DIMENSION VARIATION TABLE

MARK	NO. EA. LEN.	DIMENSION	FROM FT.-IN.	TO FT.-IN.	VARY BY FT.-IN.	DIMENSION	FROM FT.-IN.	TO FT.-IN.	VARY BY FT.-IN.

BENDING DIAGRAM

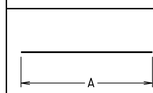

Type 1

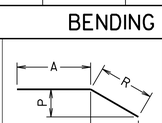

Type 2

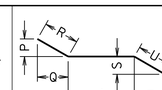

Type 4

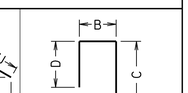

Type 7

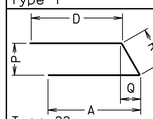

Type 22

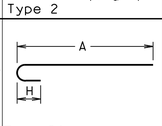

Type 24

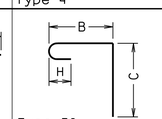

Type 30

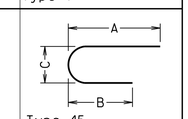

Type 45

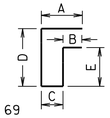

Type 69

257-38A_100.dgn

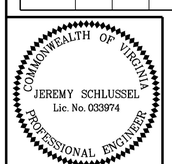

Jeremy Schlussel
2022.07.08 19:04:11 -04'00'

WHITMAN REQUARDT & ASSOCIATES
RICHMOND, VA
STRUCTURAL ENGINEER

NOTES:

Dimensions in Bending Diagram are out-to-out of bars.

Weights in schedule are based on density of 490 lb/ft.^{3}

© 2022, Commonwealth of Virginia

No.	Description	Date
	Revisions	

COMMONWEALTH OF VIRGINIA
DEPARTMENT OF TRANSPORTATION

STRUCTURE AND BRIDGE DIVISION

REINFORCING STEEL SCHEDULE
ABUTMENT B

Designed: AC	Date	Plan No.	Sheet No.
Drawn: MWL	July 2022	257-38A	100 of 125
Checked: WRA			

STATE	FEDERAL AID		STATE		SHEET NO.
	ROUTE	PROJECT	ROUTE	PROJECT	
VA.	—		95	0095-076-299, B688	101

REINFORCING STEEL SCHEDULE

MARK	NO.	BAR SIZE	PIN DIA. FT.-IN.	LENGTH FT.-IN. FT.-IN.	WEIGHT (LBS.)	LOCATION
				PIER 1		
				Footing - Black Reinforcing Steel		
PF0801	20	08	0-6	10-9	574	Footing
PF0802	20	08	0-6	10-4	552	Footing
PF0603	24	06		8-6	306	Footing
			TOTAL WEIGHT IN PRECEDING GROUP OF BARS		1432	
				Footing - CRR, Class I		
PF0804	24	08	0-6	9-3 1/2	595	Footing / Column
			TOTAL WEIGHT IN PRECEDING GROUP OF BARS		595	
				Neat - CRR, Class I		
PC0801	6	08	0-6	12-2 1/2	196	Cap
PC0802	2	08	0-6	11-6 3/4	62	Cap
PC0803	6	08	0-6	11-8 1/2	188	Cap
PC0804	2	08	0-6	11-0 3/4	59	Cap
PC0505	12	05		9-3	116	Cap
PC0506	4	05		6-6 TO 8-9	32	Cap
PC0607	2	06	0-4 1/2	9-6 7/8	29	Cap
PC0608	6	06	0-4 1/2	10-5 3/8	94	Cap
PC0509	8	05	0-2 1/2	11-6 3/4 TO 12-4 3/4	100	Cap Stirrup
PC0510	32	05	0-2 1/2	12-7 TO 14-0 3/4	445	Cap Stirrup
PC0511	10	05	0-2 1/2	14-0 3/4	147	Cap Stirrup
PC0512	4	05	0-2 1/2	10-10 3/4	45	Cap Stirrup
PN0501	14	05	0-2 1/2	7-11 3/4	117	Cap Ends
PP0501	18	05	0-2 1/2	7-11 7/8	150	Beam Seat
PP0502	2	05	0-2 1/2	7-8	16	Beam Seat
PP0503	2	05		3-8	8	Beam Seat
PP0504	4	05		3-10 1/2	16	Beam Seat
PS0401	17	04	0-2	11-7 7/8	132	Column Stirrup
PV0801	24	08		20-7 1/2	1322	Column Vertical
			TOTAL WEIGHT IN PRECEDING GROUP OF BARS		3274	
				Neat - CRR, Class I @ Beam Seat Modifications		
PP0505	40	05	0-2 1/2	3-1	129	Beam Seat Modification
PP0506	40	05	0-2 1/2	4-4 3/4	183	Beam Seat Modification
PP0507	80	05	0-2 1/2	4-6 3/4	380	Beam Seat Modification
PP0508	5	05	0-2 1/2	13-2 3/4	69	Beam Seat Modification
			TOTAL WEIGHT IN PRECEDING GROUP OF BARS		761	

DIMENSION TABLE

MARK	TYPE	A FT.-IN.	B FT.-IN.	C FT.-IN.	D FT.-IN.	E P FT.-IN.	F Q FT.-IN.	G R FT.-IN.	H FT.-IN.	I S FT.-IN.	J T FT.-IN.	K U FT.-IN.	L FT.-IN.	V FT.-IN.	N FT.-IN.
PF0801	7		8-6	1-4	1-4										
PF0802	25	8-6							0-8						
PF0603	1	8-6													
PF0804	6		1-4	8-2											
PC0801	7		9-11 1/2	1-4	1-4										
PC0802	7		9-3 3/4	1-4	1-4										
PC0803	7		9-5 1/2	1-4	1-4										
PC0804	7		8-9 3/4	1-4	1-4										
PC0505	1	9-3													
PC0506	1	VARY													
PC0607	3	3-10 1/4				1-2	2-7 1/2	2-10 1/2		1-2	2-7 1/2	2-10 1/2			
PC0608	3	3-10 1/4				1-4	3-0 3/8	3-3 3/4		1-4	3-0 3/8	3-3 3/4			
PC0509	51		2-2	VARY					0-5 5/8						
PC0510	51		2-2	VARY					0-5 5/8						
PC0511	51		2-2	4-8					0-5 5/8						
PC0512	51		1-11	3-4					0-5 5/8						
PN0501	20	2-4			2-2 7/8	0-5 1/8	0-5	0-7 1/8							
PP0501	7		1-4	3-5 1/4	3-5 1/4										
PP0502	7		1-0 1/8	3-5 1/4	3-5 1/4										
PP0503	1	3-8													
PP0504	1	3-10 1/2													
PS0401	51		2-10	2-10					0-4 1/2						
PV0801	1	20-7 1/2													
PP0505	30		1-2 1/8	1-6					0-5						
PP0506	6		3-0	1-6											
PP0507	6		3-0	1-8											
PP0508	51		3-1	3-4					0-5 5/8						

DIMENSION VARIATION TABLE

MARK	NO. EA. LEN.	DIMEN-SION	FROM FT.-IN.	TO FT.-IN.	VARY BY FT.-IN.	DIMEN-SION	FROM FT.-IN.	TO FT.-IN.	VARY BY FT.-IN.
PC0506	2	A	6-6	8-9	2-3				
PC0509	4	C	3-5	3-10	0-5				
PC0510	4	C	3-11 1/8	4-8	0-1 1/4				

BENDING DIAGRAM

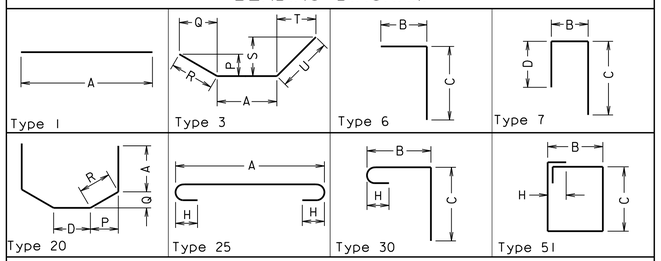

NOTES:

Dimensions in Bending Diagram are out-to-out of bars.

Weights in schedule are based on density of 490 lb/ft.^{3}

JEREMY SCHLUSSEL
Lic. No. 033974
COMMONWEALTH OF VIRGINIA
PROFESSIONAL ENGINEER

Jeremy Schlussel
2022.07.08 19:04:34 -04'00'

WHITMAN REQUARDT & ASSOCIATES
RICHMOND, VA
STRUCTURAL ENGINEER

No.	Description	Date
	Revisions	

© 2022, Commonwealth of Virginia

COMMONWEALTH OF VIRGINIA
DEPARTMENT OF TRANSPORTATION

STRUCTURE AND BRIDGE DIVISION

REINFORCING STEEL SCHEDULE
PIER 1

Designed: AC	Date	Plan No.	Sheet No.
Drawn: MWL	July 2022	257-38A	101 of 125
Checked: WRA			

257-38A_101.dgn

STATE	FEDERAL AID		STATE		SHEET NO.
	ROUTE	PROJECT	ROUTE	PROJECT	
VA.	—		95	0095-076-299, B688	101a

REINFORCING STEEL SCHEDULE

MARK	NO.	BAR SIZE	PIN DIA. FT.-IN.	LENGTH FT.-IN.	WEIGHT (LBS.)	LOCATION
				PIER 2		
				Footing - Black Reinforcing Steel		
PF0805	20	08	0-6	13-9	734	Footing
PF0806	20	08	0-6	11-4	605	Footing
PF0607	12	06		9-6	171	Footing
PF0608	12	06		11-6	207	Footing
			TOTAL WEIGHT IN PRECEDING GROUP OF BARS		1717	
				Footing - CRR, Class I		
PF0804	24	08	0-6	9-3 1/2	595	Footing / Column
			TOTAL WEIGHT IN PRECEDING GROUP OF BARS		595	
				Neat - CRR, Class I		
PC0801	6	08	0-6	12-2 1/2	196	Cap
PC0802	2	08	0-6	11-6 3/4	62	Cap
PC0803	6	08	0-6	11-8 1/2	188	Cap
PC0804	2	08	0-6	11-0 3/4	59	Cap
PC0505	12	05		9-3	116	Cap
PC0506	4	05		6-9 TO 8-10 1/2	33	Cap
PC0607	2	06	0-4 1/2	9-6 7/8	29	Cap
PC0608	6	06	0-4 1/2	10-5 3/8	94	Cap
PC0509	8	05	0-2 1/2	11-6 3/4 TO 12-4 3/4	100	Cap Stirrup
PC0510	32	05	0-2 1/2	12-7 TO 14-0 3/4	445	Cap Stirrup
PC0511	10	05	0-2 1/2	14-0 3/4	147	Cap Stirrup
PC0512	4	05	0-2 1/2	10-10 3/4	45	Cap Stirrup
PN0501	14	05	0-2 1/2	7-11 3/4	117	Cap Ends
PS0401	17	04	0-2	11-7 7/8	132	Column Stirrup
PV0802	24	08		20-9	1330	Column Vertical
			TOTAL WEIGHT IN PRECEDING GROUP OF BARS		3093	
				Neat - CRR, Class I @ Beam Seat Modifications		
PP0512	100	05	0-2 1/2	4-0 3/4	423	Beam Seat Modification
PP0513	90	05	0-2 1/2	4-3 3/4	404	Beam Seat Modification
PP0514	5	05	0-2 1/2	15-2 3/4	79	Beam Seat Modification
			TOTAL WEIGHT IN PRECEDING GROUP OF BARS		906	

DIMENSION TABLE

MARK	TYPE	A FT.-IN.	B FT.-IN.	C FT.-IN.	D FT.-IN.	E P FT.-IN.	F Q FT.-IN.	G R FT.-IN.	H FT.-IN.	I S FT.-IN.	J T FT.-IN.	K U FT.-IN.	L FT.-IN.	V FT.-IN.	N FT.-IN.
PF0805	7		11-6	1-4	1-4										
PF0806	25	9-6							0-8						
PF0607	1	9-6													
PF0608	1	11-6													
PF0804	6		1-4	8-2											
PC0801	7		9-11 1/2	1-4	1-4										
PC0802	7		9-3 3/4	1-4	1-4										
PC0803	7		9-5 1/2	1-4	1-4										
PC0804	7		8-9 3/4	1-4	1-4										
PC0505	1	9-3													
PC0506	1	VARY													
PC0607	3	3-10 1/4				1-2	2-7 1/2	2-10 1/2		1-2	2-7 1/2	2-10 1/2			
PC0608	3	3-10 1/4				1-4	3-0 3/8	3-3 3/4		1-4	3-0 3/8	3-3 3/4			
PC0509	51		2-2	VARY					0-5 5/8						
PC0510	51		2-2	VARY					0-5 5/8						
PC0511	51		2-2	4-8					0-5 5/8						
PC0512	51		1-11	3-4					0-5 5/8						
PN0501	20	2-4			2-2 7/8	0-5 1/8	0-5	0-7 1/8							
PS0401	51		2-10	2-10					0-4 1/2						
PV0802	1	20-9													
PP0512	6		3-0	1-2											
PP0513	6		3-3	1-2											
PP0514	51		4-1	3-4					0-5 5/8						

DIMENSION VARIATION TABLE

MARK	NO. EA. LEN.	DIMEN-SION	FROM FT.-IN.	TO FT.-IN.	VARY BY FT.-IN.	DIMEN-SION	FROM FT.-IN.	TO FT.-IN.	VARY BY FT.-IN.
PC0506	2	A	6-9	8-10 1/2	2-1 1/2				
PC0509	4	C	3-5	3-10	0-5				
PC0510	4	C	3-11 1/8	4-8	0-1 1/4				

BENDING DIAGRAM

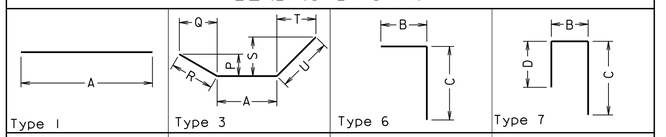

NOTES:

Dimensions in Bending Diagram are out-to-out of bars.

Weights in schedule are based on density of 490 lb/ft.^{3}

JEREMY SCHLUSSEL
Lic. No. 033974
COMMONWEALTH OF VIRGINIA
PROFESSIONAL ENGINEER

Jeremy Schlussel
2022.07.08 19:03:25 -04'00'

WHITMAN REQUARDT & ASSOCIATES
RICHMOND, VA
STRUCTURAL ENGINEER

No.	Description	Date
	Revisions	

© 2022, Commonwealth of Virginia

COMMONWEALTH OF VIRGINIA
DEPARTMENT OF TRANSPORTATION

STRUCTURE AND BRIDGE DIVISION

REINFORCING STEEL SCHEDULE
PIER 2

Designed: AC	Date	Plan No.	Sheet No.
Drawn: MWL	July 2022	257-38A	101a of 125
Checked: WRA			

257-38A_101a.dgn

STATE	FEDERAL AID		STATE		SHEET NO.
	ROUTE	PROJECT	ROUTE	PROJECT	
VA.	—		95	0095-076-299, B688	102

REINFORCING STEEL SCHEDULE

MARK	NO.	BAR SIZE	PIN DIA. FT.-IN.	LENGTH FT.-IN.	WEIGHT (LBS.)	LOCATION
				PIER 3		
				Footing - Black Reinforcing Steel		
PF0801	20	08	0-6	10-9	574	Footing
PF0802	20	08	0-6	10-4	552	Footing
PF0603	24	06		8-6	306	Footing
			TOTAL WEIGHT IN PRECEDING GROUP OF BARS		1432	
				Footing - CRR, Class I		
PF0804	24	08	0-6	9-3 1/2	595	Footing
			TOTAL WEIGHT IN PRECEDING GROUP OF BARS		595	
				Neat - CRR, Class I		
PC0801	6	08	0-6	12-2 1/2	196	Cap
PC0802	2	08	0-6	11-6 3/4	62	Cap
PC0803	6	08	0-6	11-8 1/2	188	Cap
PC0804	2	08	0-6	11-0 3/4	59	Cap
PC0505	12	05		9-3	116	Cap
PC0506	4	05		6-6 TO 8-9	32	Cap
PC0607	2	06	0-4 1/2	9-6 7/8	29	Cap
PC0608	6	06	0-4 1/2	10-5 3/8	94	Cap
PC0509	8	05	0-2 1/2	11-6 3/4 TO 12-4 3/4	100	Cap Stirrup
PC0510	32	05	0-2 1/2	12-7 TO 14-0 3/4	445	Cap Stirrup
PC0511	10	05	0-2 1/2	14-0 3/4	147	Cap Stirrup
PC0512	4	05	0-2 1/2	10-10 3/4	45	Cap Stirrup
PN0501	14	05	0-2 1/2	7-11 3/4	117	Cap Ends
PP0501	18	05	0-2 1/2	7-11 7/8	150	Beam Seat
PP0502	2	05	0-2 1/2	7-8	16	Beam Seat
PP0503	2	05		3-8	8	Beam Seat
PP0504	6	05		3-10 1/2	24	Beam Seat
PS0401	17	04	0-2	11-7 7/8	132	Column Stirrup
PV0803	24	08		21-1	1351	Column Vertical
			TOTAL WEIGHT IN PRECEDING GROUP OF BARS		3311	
				Neat - CRR, Class I @ Beam Seat Modifications		
PP0505	16	05	0-2 1/2	3-8 1/8	61	Beam Seat Modification
PP0506	16	05	0-2 1/2	4-4 3/4	73	Beam Seat Modification
PP0507	32	05	0-2 1/2	4-6 3/4	152	Beam Seat Modification
PP0508	2	05	0-2 1/2	13-2 3/4	28	Beam Seat Modification
PP0509	24	05	0-2 1/2	3-0 1/4	76	Beam Seat Modification
PP0510	24	05	0-2 1/2	2-11 1/4	73	Beam Seat Modification
PP0511	12	05		3-0	38	Beam Seat Modification
			TOTAL WEIGHT IN PRECEDING GROUP OF BARS		501	

DIMENSION TABLE

MARK	TYPE	A FT.-IN.	B FT.-IN.	C FT.-IN.	D FT.-IN.	E P FT.-IN.	F Q FT.-IN.	G R FT.-IN.	H FT.-IN.	I S FT.-IN.	J T FT.-IN.	K U FT.-IN.	L FT.-IN.	V FT.-IN.	N FT.-IN.
PF0801	7		8-6	1-4	1-4										
PF0802	25	8-6							0-8						
PF0603	1	8-6													
PF0804	6		1-4	8-2											
PC0801	7		9-11 1/2	1-4	1-4										
PC0802	7		9-3 3/4	1-4	1-4										
PC0803	7		9-5 1/2	1-4	1-4										
PC0804	7		8-9 3/4	1-4	1-4										
PC0505	1	9-3													
PC0506	1	VARY													
PC0607	3	3-10 1/4				1-2	2-7 1/2	2-10 1/2		1-2	2-7 1/2	2-10 1/2			
PC0608	3	3-10 1/4				1-4	3-0 3/8	3-3 3/4		1-4	3-0 3/8	3-3 3/4			
PC0509	51		2-2	VARY					0-5 5/8						
PC0510	51		2-2	VARY					0-5 5/8						
PC0511	51		2-2	4-8					0-5 5/8						
PC0512	51		1-11	3-4					0-5 5/8						
PN0501	20	2-4			2-2 7/8	0-5 1/8	0-5	0-7 1/8							
PP0501	7		1-4	3-5 1/4	3-5 1/4										
PP0502	7		1-0 1/8	3-5 1/4	3-5 1/4										
PP0503	1	3-8													
PP0504	1	3-10 1/2													
PS0401	51		2-10	2-10					0-4 1/2						
PV0803	1	21-1													
PP0505	30		1-9 1/4	1-6					0-5						
PP0506	6		3-0	1-6											
PP0507	6		3-0	1-8											
PP0508	51		3-1	3-4					0-5 5/8						
PP0509	6		2-7 1/2	0-6											
PP0510	6		1-5 1/2	1-7											
PP0511	1	3-0													

DIMENSION VARIATION TABLE

MARK	NO. EA. LEN.	DIMEN-SION	FROM FT.-IN.	TO FT.-IN.	VARY BY FT.-IN.	DIMEN-SION	FROM FT.-IN.	TO FT.-IN.	VARY BY FT.-IN.
PC0506	2	A	6-6	8-9	2-3				
PC0509	4	C	3-5	3-10	0-5				
PC0510	4	C	3-11 1/8	4-8	0-1 1/4				

BENDING DIAGRAM

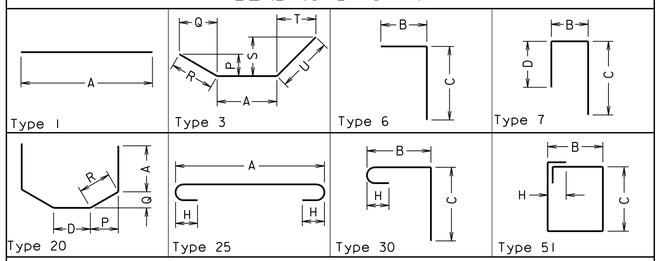

NOTES:

Dimensions in Bending Diagram are out-to-out of bars.

Weights in schedule are based on density of 490 lb/ft.^{3}

JEREMY SCHLUSSEL
Lic. No. 033974
COMMONWEALTH OF VIRGINIA
PROFESSIONAL ENGINEER

Jeremy Schlussel
2022.07.08 19:03:44 -04'00'

WHITMAN REQUARDT & ASSOCIATES
RICHMOND, VA
STRUCTURAL ENGINEER

No.	Description	Date
	Revisions	

© 2022, Commonwealth of Virginia

COMMONWEALTH OF VIRGINIA
DEPARTMENT OF TRANSPORTATION

STRUCTURE AND BRIDGE DIVISION

REINFORCING STEEL SCHEDULE
PIER 3

Designed: AC	Date	Plan No.	Sheet No.
Drawn: MWL	July 2022	257-38A	102 of 125
Checked: WRA			

257-38A_102.dgn

STATE	FEDERAL AID		STATE		SHEET NO.
	ROUTE	PROJECT	ROUTE	PROJECT	
VA.	—		95	0095-076-299, B688	103

REINFORCING STEEL SCHEDULE

MARK	NO.	BAR SIZE	PIN DIA. FT.-IN.	LENGTH FT.-IN.	WEIGHT (LBS.)	LOCATION
				Abutment C		
				Footing - Black Reinforcing Steel		
AF0401	14	04	1-3	8-8 3/8	81	Footing
AF0602	91	06		6-6	888	Footing
AF0603	25	06		36-10	1382	Footing
AF0604	22	06		6-6	215	Footing
AF0605	30	06		11-0	495	Footing
AF0606	8	06		14-3	171	Footing
AF0607	32	06	0-4 1/2	7-2 1/4	345	Footing
AF0608	8	06		6-9	81	Footing
AF0509	38	05		3-6	139	Footing
AF0510	75	05	0-3 3/4	4-9 7/8	377	Footing
AF0511	22	05		5-4	122	Footing
AF0612	40	06	0-4 1/2	5-2 1/4	311	Footing
AF0513	4	05	0-3 3/4	4-5 7/8	19	Footing
AF0514	6	05		3-6	22	Footing
			TOTAL WEIGHT IN PRECEDING GROUP OF BARS		4648	
				Neat - Black Reinforcing Steel		
AH0501	6	05		36-10 1/2	231	Stem
AH0602	4	06		10-0	60	Stem
AH0603	4	06		9-0	54	Stem
AH0604	4	06		9-4	56	Stem
AH0605	4	06		8-2	49	Stem
AH0606	4	06		9-0	54	Stem
AH0507	4	05		36-10 1/2	154	Backwall
AH0508	6	05		36-10 1/2	231	Backwall
AV0501	38	05	0-3 3/4	6-2 3/4	247	Stem
AV0502	38	05	0-3 3/4	10-8 3/8	424	Stem/Backwall
AV0503	75	05	0-3 3/4	4-11 3/4	390	Backwall
AV0504	4	05		3-3	14	Wingwall
AW0501	4	05		2-3	9	Wingwall
AW0502	2	05		5-9	12	Wingwall
AW0503	3	05		12-11	40	Wingwall
AW0504	4	05		11-0	46	Wingwall
AW0505	3	05		9-0	28	Wingwall
AW0606	5	06		12-11	97	Wingwall
AW0607	7	06		11-0	116	Wingwall
AW0608	3	06		9-0	41	Wingwall
AW0509	3	05		13-2	41	Wingwall
AW0510	4	05		11-2	47	Wingwall
AW0511	3	05		9-1 1/2	29	Wingwall
AW0612	5	06		13-2	99	Wingwall
AW0613	7	06		11-2	117	Wingwall
AW0614	3	06		9-1 1/2	41	Wingwall
AW0515	12	05	0-3 3/4	6-6 1/2	82	Wingwall
AW0516	19	05	0-3 3/4	6-1 1/2	121	Wingwall
AW0517	7	05	0-3 3/4	7-9 7/8	57	Wingwall
AW0518	12	05	0-3 3/4	6-6 3/8	82	Wingwall
AW0519	19	05	0-3 3/4	6-1 3/8	121	Wingwall
AW0520	7	05	0-3 3/4	7-7 1/8	55	Wingwall
AW0521	11	05		6-6	75	Wingwall
AW0622	20	06		6-6	195	Wingwall
AW0523	11	05		6-6	75	Wingwall
AW0624	20	06		6-6	195	Wingwall
AP0401	36	04	0-3	4-10 1/4	117	Seat
AP0602	24	06		2-8	96	Seat
			TOTAL WEIGHT IN PRECEDING GROUP OF BARS		3998	
				Moment Slab on RW-3		
				Corrosion Resistant Reinforcing, Class II		
FL0401	3	04		19-0	38	Longitudinal
FL0402	2	04		2-8 1/4	4	Longitudinal
FL0403	2	04		7-6 7/8	10	Longitudinal
FL0404	2	04		13-5 1/2	18	Longitudinal
FL0405	16	04		18-10 7/8 TO 19-1 3/4	203	Longitudinal
FL0406	48	04		22-7	724	Longitudinal
FL0407	16	04		22-5 1/2	240	Longitudinal
FT0601	220	06	0-4 1/2	6-7 7/8	2198	Transverse
FT0602	220	06	0-4 1/2	6-10 1/8	2260	Transverse
FT0603	47	06	0-4 1/2	6-7 7/8 TO 9-10 1/2	583	Transverse
FT0604	47	06	0-4 1/2	6-9 3/8 TO 10-0	592	Transverse
			TOTAL WEIGHT IN PRECEDING GROUP OF BARS		6870	

DIMENSION TABLE

MARK	TYPE	A FT.-IN.	B FT.-IN.	C FT.-IN.	D FT.-IN.	E P FT.-IN.	F Q FT.-IN.	G R FT.-IN.	H FT.-IN.	I S FT.-IN.	J T FT.-IN.	K U FT.-IN.	L FT.-IN.	V FT.-IN.	N FT.-IN.
AF0401	45	4-0	4-0	1-4											
AF0602	1	6-6													
AF0603	1	36-10													
AF0604	1	6-6													
AF0605	1	11-0													
AF0606	1	14-3													
AF0607	24	6-6							0-6						
AF0608	1	6-9													
AF0509	1	3-6													
AF0510	24	4-3							0-5						
AF0511	1	5-4													
AF0612	24	4-6							0-6						
AF0513	24	3-11							0-5						
AF0514	1	3-6													
AH0501	1	36-10 1/2													
AH0602	1	10-0													
AH0603	1	9-0													
AH0604	1	9-4													
AH0605	1	8-2													
AH0606	1	9-0													
AH0507	1	36-10 1/2													
AH0508	1	36-10 1/2													
AV0501	30		3-5 1/2	2-4					0-5						
AV0502	7		0-10 1/2	5-4	4-9										
AV0503	30		1-5 1/2	3-1					0-5						
AV0504	1	3-3													
AW0501	1	2-3													
AW0502	1	5-9													
AW0503	1	12-11													
AW0504	1	11-0													
AW0505	1	9-0													
AW0606	1	12-11													
AW0607	1	11-0													
AW0608	1	9-0													
AW0509	1	13-2													
AW0510	1	11-2													
AW0511	1	9-1 1/2													
AW0612	1	13-2													
AW0613	1	11-2													
AW0614	1	9-1 1/2													
AW0515	2	3-4				3-4	0-1 1/2	3-4							
AW0516	2	4-3				2-0	0-1	2-0							
AW0517	3	5-10 1/2				0-8 1/4	0-8 3/4	1-0		0-8 1/4	0-8 3/4	1-0			
AW0518	33	3-4				3-4	0-1 1/2	3-4							
AW0519	33	4-3				2-0	0-1	2-0							
AW0520	3	5-7 3/4				0-8 1/4	0-8 1/2	1-0		0-8 1/4	0-8 1/2	1-0			
AW0521	1	6-6													
AW0622	1	6-6													
AW0523	1	6-6													
AW0624	1	6-6													
AP0401	30		3-5 1/2	1-0					0-4 1/2						
AP0602	1	2-8													
FL0401	1	19-0													
FL0402	1	2-8 1/4													
FL0403	1	7-6 7/8													
FL0404	1	13-5 1/2													
FL0405	1	VARY													
FL0406	1	22-7													
FL0407	1	22-5 1/2													
FT0601	37	1-7 7/8			3-7 5/8	0-9 5/8	0-3 1/2	0-10 1/8	0-6						
FT0602	6		1-5	5-7											
FT0603	37	VARY			3-7 5/8	0-9 5/8	0-3 1/2	0-10 1/8	0-6						
FT0604	6		1-4 1/4	VARY											

DIMENSION VARIATION TABLE

MARK	NO. EA. LEN.	DIMENSION	FROM FT.-IN.	TO FT.-IN.	VARY BY FT.-IN.	DIMENSION	FROM FT.-IN.	TO FT.-IN.	VARY BY FT.-IN.
FT0603	1	A	1-7 7/8	4-10 1/2	0-0 7/8				
FT0604	1	C	5-7	8-9 5/8	0-0 7/8				
FL0405	1	A	18-10 7/8	19-1 3/4	0-0 1/4				

BENDING DIAGRAM

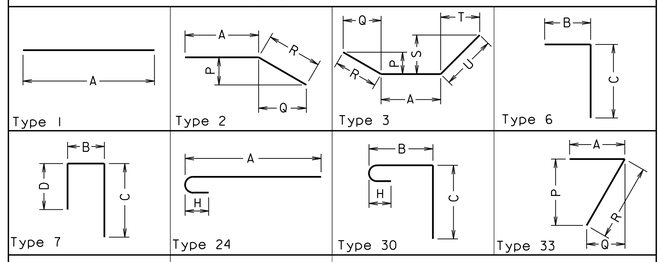

NOTES:

Dimensions in Bending Diagram are out-to-out of bars.

Weights in schedule are based on density of 490 lb/ft.^{3}

JEREMY SCHLUSSEL
Lic. No. 033974
COMMONWEALTH OF VIRGINIA
PROFESSIONAL ENGINEER

Jeremy Schlussel
2022.07.08 19:03:00 -04'00'

WHITMAN REQUARDT & ASSOCIATES
RICHMOND, VA
STRUCTURAL ENGINEER

© 2022. Commonwealth of Virginia

No.	Description	Date
	Revisions	

COMMONWEALTH OF VIRGINIA
DEPARTMENT OF TRANSPORTATION

STRUCTURE AND BRIDGE DIVISION

REINFORCING STEEL SCHEDULE ABUTMENT C AND MOMENT SLAB

Designed: RS	Date	Plan No.	Sheet No.
Drawn: MWL	July 2022	257-38A	103 of 125
Checked: SLH			

257-38A_103.dgn

STATE	FEDERAL AID		STATE		SHEET NO.
	ROUTE	PROJECT	ROUTE	PROJECT	
VA.	—		2000	0095-076-299, B688	104

VDOT Virginia Department of Transportation

PROJECT #: 45893-001
LOCATION: I-95 Express way/Opitz Blvd.
STRUCTURE: BRIDGE

B-A1-6
PAGE 1 OF 3

STATION: 70+30 OFFSET: 46 RT
NORTHING: 355252.1568 ft Easting: 3626874.5973 ft
SURFACE ELEVATION: 211.6 ft COORD. DATUM: VA South

FIELD DATA

Date(s) Drilled: 11/8/2021 – 11/8/2021
Drilling Method(s): HSA
SPT Method: Automatic Hammer
Other Test(s):
Driller: SaLUT, Inc.
Logger: J. Yadeta

GROUND WATER
▼ FIRST ENCOUNTERED AT 58.5 ft DEPTH

LAB DATA

DEPTH (ft)	ELEVATION (ft)	STANDARD PENETRATION TEST HAMMER BLOWS	SOIL RECOVERY (%)	SAMPLE LEGEND	SAMPLE INTERVAL	CORE RECOVERY (%)	ROCK QUALITY DESIGNATION	DIP ° STRATA	DIP ° JOINTS	STRATA LEGEND	FIELD DESCRIPTION OF STRATA	LIQUID LIMIT LL	PLASTICITY INDEX PI	MOISTURE CONTENT (%)	FINES CONTENT -#200 (%)
											0.0 / 211.6 5" Asphlat ASPH				
											0.42 / 211.18 12" Subbase material, Light gray, medium to coarse, SAND AND GRAVEL, trace Silt, dry CCA				
											1.42 / 210.18 Fill, Light brown, fine to medium SILTY SAND FILL, trace elastic fine, loose, moist Layer of 6" thick, mottled, tan-gray, FAT CLAY binder exists from 6'-6.5' SM			6.6	
2	210	6 7 5	33		0.5 2									19.3	
4		2 3 2	67		3.5 5									18.9	
6	205	WOH/4" 2/8" 17	100		6 7.5									13.3	
8		2 3 4	80		8.5 10						7.5 / 204.1 Fill, Light gray, light brown, fine to medium, CLAYEY SAND, loose, moist SC			18.7	
10	200	2 3 4	100		11 12.5									15.6	23.0
12		3 3 3	100		13.5 15							35	11	15.8	
14	195	3 4 4	100		16 17.5									15.6	
16		3 6 4	100		18.5 20						20.0 / 191.6 Fill, Tan, light brown, fine to coarse, SAND WITH GRAVEL, trace Clay, loose, damp SP/GP			16.1	
18	190														
20															
22															
24		3 4 3	100		23.5 25						25.0 / 186.6 Fill, Tan, gray, fine to medium, SILTY, CLAYEY SAND, trace root, medium dense, moist SC-SM				
26	185														
28		3 6 9	67		28.5 30									26.6	
30	180										30.0 / 181.6 Fill, Light brown, fine to coarse, SILTY SAND WITH GRAVEL, medium dense, moist SM/GM				
32		5 9 8	47		33.5 35									16.5	
34															
36															

REMARKS: Rig Type: Acker XLS.
Boring was offset 20' towards east due to undergroun utility. As drilled boring elevatoin is the same as the original location.
Bulk sample collected from 0' – 8'. Hole backfilled with soil cutting and patched with cold asphalt at the surface.

PAGE 1 OF 3
B-A1-6

Copyright 2022, Commonwealth of Virginia

VDOT Virginia Department of Transportation

PROJECT #: 45893-001
LOCATION: I-95 Express way/Opitz Blvd.
STRUCTURE: BRIDGE

B-A1-6
PAGE 2 OF 3

STATION: 70+30 OFFSET: 46 RT
NORTHING: 355252.1568 ft Easting: 3626874.5973 ft
SURFACE ELEVATION: 211.6 ft COORD. DATUM: VA South

FIELD DATA

Date(s) Drilled: 11/8/2021 – 11/8/2021
Drilling Method(s): HSA
SPT Method: Automatic Hammer
Other Test(s):
Driller: SaLUT, Inc.
Logger: J. Yadeta

GROUND WATER
▼ FIRST ENCOUNTERED AT 58.5 ft DEPTH

LAB DATA

DEPTH (ft)	ELEVATION (ft)	STANDARD PENETRATION TEST HAMMER BLOWS	SOIL RECOVERY (%)	SAMPLE LEGEND	SAMPLE INTERVAL	CORE RECOVERY (%)	ROCK QUALITY DESIGNATION	DIP ° STRATA	DIP ° JOINTS	STRATA LEGEND	FIELD DESCRIPTION OF STRATA	LIQUID LIMIT LL	PLASTICITY INDEX PI	MOISTURE CONTENT (%)	FINES CONTENT -#200 (%)
38	175														
40		3 3 4	87		38.5 40						38.0 / 173.6 Residual, Gray, fine to medium, SILTY SAND, loose, moist SM			18.3	
42	170														
44		2 4 8	20		43.5 45						43.5 / 168.1 Gray, LEAN CLAY, stiff, damp CL	35	11	19.2	98.0
46	165														
48		8 20 19	80		48.5 50						48.5 / 163.1 Black, SILT, highly weathered, DECOMPOSED GRAPHITIC SCHIST, lithified, some rock fragments, very stiff to hard, dry to wet below 58.5' Hard augering below 68.5' MST			17.2	
50		50/4"	20		53.5 55									12.1	
52	160														
54		26 20 50	100		58.5 60									11.9	
56	155														
58															
60		15 50/1"	40		63.5 65									14.9	
62	150														
64															
66	145														
68		50/2"	13		68.5 70									19.7	
70															
72	140														

Estimated pile tip elevation 151.00 - Abutment B

REMARKS: Rig Type: Acker XLS.
Boring was offset 20' towards east due to undergroun utility. As drilled boring elevatoin is the same as the original location.
Bulk sample collected from 0' – 8'. Hole backfilled with soil cutting and patched with cold asphalt at the surface.

PAGE 2 OF 3
B-A1-6

Copyright 2022, Commonwealth of Virginia

VDOT Virginia Department of Transportation

PROJECT #: 45893-001
LOCATION: I-95 Express way/Opitz Blvd.
STRUCTURE: BRIDGE

B-A1-6
PAGE 3 OF 3

STATION: 70+30 OFFSET: 46 RT
NORTHING: 355252.1568 ft Easting: 3626874.5973 ft
SURFACE ELEVATION: 211.6 ft COORD. DATUM: VA South

FIELD DATA

Date(s) Drilled: 11/8/2021 – 11/8/2021
Drilling Method(s): HSA
SPT Method: Automatic Hammer
Other Test(s):
Driller: SaLUT, Inc.
Logger: J. Yadeta

GROUND WATER
▼ FIRST ENCOUNTERED AT 58.5 ft DEPTH

LAB DATA

DEPTH (ft)	ELEVATION (ft)	STANDARD PENETRATION TEST HAMMER BLOWS	SOIL RECOVERY (%)	SAMPLE LEGEND	SAMPLE INTERVAL	CORE RECOVERY (%)	ROCK QUALITY DESIGNATION	DIP ° STRATA	DIP ° JOINTS	STRATA LEGEND	FIELD DESCRIPTION OF STRATA	LIQUID LIMIT LL	PLASTICITY INDEX PI	MOISTURE CONTENT (%)	FINES CONTENT -#200 (%)
74		15 50/2"	40		73.5 75						75.0 / 136.6 Boring terminated at 75ft			16.2	

REMARKS: Rig Type: Acker XLS.
Boring was offset 20' towards east due to undergroun utility. As drilled boring elevatoin is the same as the original location.
Bulk sample collected from 0' – 8'. Hole backfilled with soil cutting and patched with cold asphalt at the surface.

PAGE 3 OF 3
B-A1-6

Copyright 2022, Commonwealth of Virginia

SPT_LOGS\I-95_EXPRESS_LANE-_OPITZ_BLVD_BORINGS.GPJ\SPT7.GDT\gINT_version 8.30.0041/6/22\Whitman, Requardt and Associates

257-38A_104.dgn

A copy of the original signed geotechnical submittal is on file in the District Office.

The subsurface information shown on the boring logs in these plans was obtained with reasonable care and recorded in good faith solely for use by the Department in establishing design controls for the project. The Department has no reason to suspect that such information is not reasonably accurate as an approximate indication of the subsurface conditions at the sites where the borings were taken. The Department does not in any way warrant or guarantee that such data can be projected as indicative of conditions beyond the limits of the borings shown; and any such projections by bidders are purely interpretive and altogether speculative. Further, the Department does not in any way guarantee, either expressly or by implication, the sufficiency of the information for bid purposes.

The boring logs are made available to bidders in order that they may have access to subsurface data identical to that which is possessed by the Department, and are not intended as a substitute for personal investigation, interpretation and judgment by the bidders.

No.	Description	Date

Revisions

© 2022, Commonwealth of Virginia

COMMONWEALTH OF VIRGINIA
DEPARTMENT OF TRANSPORTATION

STRUCTURE AND BRIDGE DIVISION

ENGINEERING GEOLOGY
I OF 5

Designed: JBH	Date	Plan No.	Sheet No.
Drawn: JBH	July 2022	257-38A	104 of 125
Checked: GTS			

STATE	FEDERAL AID		STATE		SHEET NO.
	ROUTE	PROJECT	ROUTE	PROJECT	
VA.	—		2000	0095-076-299, B688	105

VDOT Virginia Department of Transportation

PROJECT #: 45893-001
LOCATION: I-95 Express way/Opitz Blvd.
STRUCTURE: MSE WALL

B-A2-1
PAGE 1 OF 2

STATION: 27+10 OFFSET: 20 RT
NORTHING: 355278.6864 ft Easting: 3626597.1158 ft
SURFACE ELEVATION: 188.0 ft COORD. DATUM: VA South

Date(s) Drilled: 11/22/2021 – 11/23/2021
Drilling Method(s): HSA
SPT Method: Automatic Hammer
Other Test(s):
Driller: SaLUT, Inc.
Logger: J. Yadeta

GROUND WATER
▼ FIRST ENCOUNTERED AT 23.5 ft DEPTH

FIELD DESCRIPTION OF STRATA

0.0 / 188.0
7" Asphalt ASPH

0.6 / 187.4
6" Concrete CONC

1.1 / 186.9
17" Subbase material, Gray, medium to coarse, SAND AND GRAVEL, trace Silt, very dense, dry CRA

2.5 / 185.5
Fill, Black, brown shadding, fine to medium, SILTY SAND, some elastic fine, loose, moist SM

6.5 / 181.5
Possible fill, Tan, black spotting at 13.5'-15', fine to medium, POORLY GRADED SAND WITH SILT, trace Gravel, loose to medium dense, moist SP-SM

23.5 / 164.5
Residual, Gray, black, lithified, SILT derived from decomposition of parent rock, trace rock fragments, hard, moist ML

REMARKS: Rig Type: Acker XLS.
Boring was offset 35' towards east, drilled on western shoulder of I-95 express lane. Cave-in at 55.3'. Hole backfilled with soil cutting and patched with cold asphalt at the surface.

PAGE 1 OF 2
B-A2-1

Copyright 2022, Commonwealth of Virginia

Estimated pile tip elevation 141.00 - Abutment C

VDOT Virginia Department of Transportation

PROJECT #: 45893-001
LOCATION: I-95 Express way/Opitz Blvd.
STRUCTURE: MSE WALL

B-A2-1
PAGE 2 OF 2

STATION: 27+10 OFFSET: 20 RT
NORTHING: 355278.6864 ft Easting: 3626597.1158 ft
SURFACE ELEVATION: 188.0 ft COORD. DATUM: VA South

Date(s) Drilled: 11/22/2021 – 11/23/2021
Drilling Method(s): HSA
SPT Method: Automatic Hammer
Other Test(s):
Driller: SaLUT, Inc.
Logger: J. Yadeta

GROUND WATER
▼ FIRST ENCOUNTERED AT 23.5 ft DEPTH

FIELD DESCRIPTION OF STRATA

59.0 / 129.0
Boring terminated at 59ft

REMARKS: Rig Type: Acker XLS.
Boring was offset 35' towards east, drilled on western shoulder of I-95 express lane. Cave-in at 55.3'. Hole backfilled with soil cutting and patched with cold asphalt at the surface.

PAGE 2 OF 2
B-A2-1

Copyright 2022, Commonwealth of Virginia

VDOT Virginia Department of Transportation

PROJECT #: 45893-001
LOCATION: I-95 Express way/Opitz Blvd.
STRUCTURE: MSE WALL

B-A3-1
PAGE 1 OF 2

STATION: 26+00 OFFSET: 20 RT
NORTHING: 355172.3987 ft Easting: 3626568.6573 ft
SURFACE ELEVATION: 187.0 ft COORD. DATUM: VA South

Date(s) Drilled: 11/22/2021 – 11/22/2021
Drilling Method(s): HSA
SPT Method: Automatic Hammer
Other Test(s):
Driller: SaLUT, Inc.
Logger: J. Yadeta

GROUND WATER
▼ FIRST ENCOUNTERED AT 20.0 ft DEPTH

FIELD DESCRIPTION OF STRATA

0.0 / 187.0
15" Asphalt ASPH

1.25 / 185.75
9" Subbase material, Gray, medium to coarse, SAND AND GRAVEL, trace Silt, very dense, dry CRA

2.0 / 185.0
Possible fill, Tan, fine to medium, POORLY GRADED SAND WITH SILT, medium dense, moist SP-SM

18.5 / 168.5
Tan-brown, fine to coarse, SILTY SAND AND GRAVEL, layer of purple Silt from 23.5' to 24.2', medium dense to dense, moist to wet below 20ft. SM/GM

28.5 / 158.5
Residual, Gray, black, lithified, SILT derived from decomposition of parent rock, trace rock fragments, hard, moist ML

REMARKS: Rig Type: Acker XLS.
Cave-in at 16.7'. Bulk sample collected from 2' – 8'. Hole backfilled with soil cutting and patched with cold asphalt at the surface.

PAGE 1 OF 2
B-A3-1

Copyright 2022, Commonwealth of Virginia

257-38A_105.dgn

A copy of the original signed geotechnical submittal is on file in the District Office.

The subsurface information shown on the boring logs in these plans was obtained with reasonable care and recorded in good faith solely for use by the Department in establishing design controls for the project. The Department has no reason to suspect that such information is not reasonably accurate as an approximate indication of the subsurface conditions at the sites where the borings were taken. The Department does not in any way warrant or guarantee that such data can be projected as indicative of conditions beyond the limits of the borings shown; and any such projections by bidders are purely interpretive and altogether speculative. Further, the Department does not in any way guarantee, either expressly or by implication, the sufficiency of the information for bid purposes.

The boring logs are made available to bidders in order that they may have access to subsurface data identical to that which is possessed by the Department, and are not intended as a substitute for personal investigation, interpretation and judgment by the bidders.

© 2022, Commonwealth of Virginia

No.	Description	Date
	Revisions	

COMMONWEALTH OF VIRGINIA
DEPARTMENT OF TRANSPORTATION
STRUCTURE AND BRIDGE DIVISION

ENGINEERING GEOLOGY
2 OF 5

Designed: JBH	Date	Plan No.	Sheet No.
Drawn: JBH	July 2022	257-38A	105 of 125
Checked: GTS			

STATE	FEDERAL AID		STATE		SHEET NO.
	ROUTE	PROJECT	ROUTE	PROJECT	
VA.	—		2000	0095-076-299, B688	106

VDOT Virginia Department of Transportation

PROJECT #: 45893-001
LOCATION: I-95 Express way/Opitz Blvd.
STRUCTURE: MSE WALL

B-A3-1
PAGE 2 OF 2

STATION: 26+00 OFFSET: 20 RT
NORTHING: 355172.3987 ft Easting: 3626568.6573 ft
SURFACE ELEVATION: 187.0 ft COORD. DATUM: VA South

FIELD DATA

Date(s) Drilled: 11/22/2021 – 11/22/2021
Drilling Method(s): HSA
SPT Method: Automatic Hammer
Other Test(s):
Driller: SaLUT, Inc.
Logger: J. Yadeta

GROUND WATER
▼ FIRST ENCOUNTERED AT 20.0 ft DEPTH

LAB DATA

DEPTH (ft)	ELEVATION (ft)	STANDARD PENETRATION TEST HAMMER BLOWS	SOIL RECOVERY (%)	SAMPLE LEGEND	SAMPLE INTERVAL	CORE RECOVERY (%)	ROCK QUALITY DESIGNATION	DIP ° STRATA	DIP ° JOINTS	STRATA LEGEND	FIELD DESCRIPTION OF STRATA	LIQUID LIMIT LL	PLASTICITY INDEX PI	MOISTURE CONTENT (%)
38	150	31 50/5"	47		38.5									18.1
40					40						40.0 / 147.0 Boring terminated at 40ft			

REMARKS: Rig Type: Acker XLS.
Cave-in at 16.7'. Bulk sample collected from 2' – 8'. Hole backfilled with soil cutting and patched with cold asphalt at the surface.

PAGE 2 OF 2
B-A3-1

Copyright 2022, Commonwealth of Virginia

VDOT Virginia Department of Transportation

PROJECT #: 45893-001
LOCATION: I-95 Express way/Opitz Blvd.
STRUCTURE: MSE WALL

B-A3-2
PAGE 1 OF 2

STATION: 25+00 OFFSET: 12 LT
NORTHING: 355083.9063 ft Easting: 3626512.2718 ft
SURFACE ELEVATION: 189.2 ft COORD. DATUM: VA South

FIELD DATA

Date(s) Drilled: 11/17/2021 – 11/18/2021
Drilling Method(s): HSA
SPT Method: Automatic Hammer
Other Test(s):
Driller: SaLUT, Inc.
Logger: J. Yadeta

GROUND WATER
▼ FIRST ENCOUNTERED AT 20.7 ft DEPTH

LAB DATA

DEPTH (ft)	ELEVATION (ft)	STANDARD PENETRATION TEST HAMMER BLOWS	SOIL RECOVERY (%)	SAMPLE LEGEND	SAMPLE INTERVAL	CORE RECOVERY (%)	ROCK QUALITY DESIGNATION	DIP ° STRATA	DIP ° JOINTS	STRATA LEGEND	FIELD DESCRIPTION OF STRATA	LIQUID LIMIT LL	PLASTICITY INDEX PI	MOISTURE CONTENT (%)	FINES CONTENT -#200 (%)
											0.0 / 189.2 18" Asphalt ASPH				
											1.5 / 187.7 18" Subbase material, Gray, medium to coarse, SAND AND GRAVEL, trace Silt, very dense, dry CRA			4.3	
2		25 34	100		1.5										
					3						3.0 / 186.2 Gray-brown mix, ELASTIC SILT, medium stiff to stiff, moist ML			40.8	
4	185	2 3	100		3.5										
					5									42.4	
6		2 5	100		6										
8		5 8	100		7.5										
	180				8.5						8.5 / 180.7 Brown, tan, fine to medium, POORLY GRADED SAND WITH SILT, medium dense, moist SP-SM			14.3	
10		5 7	60		10										
		8			11										
12		4 5	87		12.5									14.5	21.0
		6			13.5										
14	175	6 7	80		15									13.9	
		10			16										
16		5 8	100		17.5									15.3	
		10			18.5										
18		6 12	87		20									14.7	
20 ▼	170	25									18.5 / 170.7 Gray, black, fine to coarse, POORLY GRADE SAND, trace Silt, dense, moist to wet below 20.5ft SP				
22															
24	165	24 50/2"	40		23.5									20.4	
					25						23.5 / 165.7 Residual, Gray, SILT DRIVED FROM DECOMPOSITION OF BED ROCK, hard, dry ML				
26															
28					28.5										
	160	60/3"	20		30						28.5 / 160.7 Gray, fine to coarse, SILTY AND GRAVEL SIZE DECOMPOSED ROCK FRAGMENTS, little elastic fine, exteremely dense to dense to extremely dense, dry to moist SM			15.6	
30															
32															
34	155	4 13 20	40		33.5									15.2	
36					35										

REMARKS: Rig Type: Acker XLS.
Cave-in at 34.5'. Boring was offset 5' towards south due to undergroun utility. As drilled boring elevatoin is the same as the original location. Bulk sample collected from 1.5' – 8'. Hole backfilled with soil cutting and patched with cold asphalt at the surface.

PAGE 1 OF 2
B-A3-2

Copyright 2022, Commonwealth of Virginia

VDOT Virginia Department of Transportation

PROJECT #: 45893-001
LOCATION: I-95 Express way/Opitz Blvd.
STRUCTURE: MSE WALL

B-A3-2
PAGE 2 OF 2

STATION: 25+00 OFFSET: 12 LT
NORTHING: 355083.9063 ft Easting: 3626512.2718 ft
SURFACE ELEVATION: 189.2 ft COORD. DATUM: VA South

FIELD DATA

Date(s) Drilled: 11/17/2021 – 11/18/2021
Drilling Method(s): HSA
SPT Method: Automatic Hammer
Other Test(s):
Driller: SaLUT, Inc.
Logger: J. Yadeta

GROUND WATER
▼ FIRST ENCOUNTERED AT 20.7 ft DEPTH

LAB DATA

DEPTH (ft)	ELEVATION (ft)	STANDARD PENETRATION TEST HAMMER BLOWS	SOIL RECOVERY (%)	SAMPLE LEGEND	SAMPLE INTERVAL	CORE RECOVERY (%)	ROCK QUALITY DESIGNATION	DIP ° STRATA	DIP ° JOINTS	STRATA LEGEND	FIELD DESCRIPTION OF STRATA	LIQUID LIMIT LL	PLASTICITY INDEX PI	MOISTURE CONTENT (%)	FINES CONTENT -#200 (%)
38	150	53/2"	13		38.5						Gray, fine to coarse, SILTY AND GRAVEL SIZE DECOMPOSED ROCK FRAGMENTS, little elastic fine, exteremely dense to dense to extremely dense, dry to moist			8.6	
40					40						40.0 / 149.2 Boring terminated at 40ft				

REMARKS: Rig Type: Acker XLS.
Cave-in at 34.5'. Boring was offset 5' towards south due to undergroun utility. As drilled boring elevatoin is the same as the original location. Bulk sample collected from 1.5' – 8'. Hole backfilled with soil cutting and patched with cold asphalt at the surface.

PAGE 2 OF 2
B-A3-2

Copyright 2022, Commonwealth of Virginia

257-38A_106.dgn

SPT_LOGBI-95 EXPRESS LANE- OPITZ BLVD BORINGS.GPJ:SPT7.GDT:gINT_version 8.30.0041/6/22:Whitman, Requardt and Associates

A copy of the original signed geotechnical submittal is on file in the District Office.

The subsurface information shown on the boring logs in these plans was obtained with reasonable care and recorded in good faith solely for use by the Department in establishing design controls for the project. The Department has no reason to suspect that such information is not reasonably accurate as an approximate indication of the subsurface conditions at the sites where the borings were taken. The Department does not in any way warrant or guarantee that such data can be projected as indicative of conditions beyond the limits of the borings shown; and any such projections by bidders are purely interpretive and altogether speculative. Further, the Department does not in any way guarantee, either expressly or by implication, the sufficiency of the information for bid purposes.

The boring logs are made available to bidders in order that they may have access to subsurface data identical to that which is possessed by the Department, and are not intended as a substitute for personal investigation, interpretation and judgment by the bidders.

© 2022, Commonwealth of Virginia

No.	Description	Date
	Revisions	

COMMONWEALTH OF VIRGINIA
DEPARTMENT OF TRANSPORTATION
STRUCTURE AND BRIDGE DIVISION

ENGINEERING GEOLOGY
3 OF 5

Designed: JBH	Date	Plan No.	Sheet No.
Drawn: JBH	July 2022	257-38A	106 of 125
Checked: GTS			

STATE	FEDERAL AID		STATE		SHEET NO.
	ROUTE	PROJECT	ROUTE	PROJECT	
VA.	—		2000	0095-076-299, B688	107

B-A3-3

PROJECT #: 45893-001
LOCATION: I-95 Express way/Opitz Blvd.
STRUCTURE: MSE WALL

PAGE 1 OF 1

STATION: 24+00 OFFSET: 23 RT
NORTHING: 354978.3553 ft Easting: 3626520.1235 ft
SURFACE ELEVATION: 185.4 ft COORD. DATUM: VA South

FIELD DATA

Date(s) Drilled: 11/29/2021 – 11/29/2021
Drilling Method(s): HSA
SPT Method: Automatic Hammer
Other Test(s):
Driller: SaLUT, Inc.
Logger: J. Yadeta

GROUND WATER
▽ FIRST ENCOUNTERED AT 19.5 ft DEPTH

LAB DATA

DEPTH (ft)	ELEVATION (ft)	STANDARD PENETRATION TEST HAMMER BLOWS	SOIL RECOVERY (%)	SAMPLE LEGEND	SAMPLE INTERVAL	CORE RECOVERY (%)	ROCK QUALITY DESIGNATION	DIP ° STRATA	DIP ° JOINTS	STRATA LEGEND	LIQUID LIMIT LL	PLASTICITY INDEX PI	MOISTURE CONTENT (%)	FINES CONTENT -#200 (%)
0	185													
		3 6 8	67		2 – 3.5								16.1	
2		2 6 6	80		3.5 – 5								18.0	
4	180	2 4 6	100		5 – 7.5								13.5	
6		3 3 7	100		7.5 – 8.5						41	16	22.4	89.0
8		4 6 8	100		8.5 – 10								12.7	
10	175	4 6 6	67		10 – 11								16.8	
12		4 8 9	100		11 – 12.5								17.6	
14	170	5 8 16	100		12.5 – 13.5								24.8	
16		6 10 18	80		13.5 – 15								19.1	
18	165	14 34 41	87		15 – 16								15.4	
20					16 – 17.5									
22	160				17.5 – 18.5									
24					18.5 – 20									
26	155				20 – 23.5									
28					23.5 – 25									
30					25 – 28.5									
					28.5 – 30									

FIELD DESCRIPTION OF STRATA

0.0 / 185.4
15" Asphalt ASPH

1.25 / 184.15
5" Subbase material over 4" concrete, Gray, medium to coarse, SAND AND GRAVEL, dry CRA

2.0 / 183.4
Fill, Tan-gray, fine to medium, POORLY GRADED SAND WITH SILT, medium dense, moist SP-SM

6.5 / 178.9
Fill, Gray, fine to medium, CLAYEY, SILTY SAND, some woods, loose, moist SC-SM

8.5 / 176.9
Fill, Brown, LEAN CLAY, stiff, moist CL

11.0 / 174.4
Fill, Brown, fine to medium, POORLY GRADED, SAND WITH SILT, medium dense, moist SP-SM

13.0 / 172.4
Residual, Brown-light brown, fine to medium, POORLY GRADED SAND WITH SILT, medium dense, moist to wet below 19ft. SP-SM

23.5 / 161.9
Residual, Gray, black, lithified, SILT derived from decomposition of parent rock, trace rock fragments, very stiff to hard, moist ML

30.0 / 155.4
Boring terminated at 30ft.

REMARKS: Rig Type: Acker XLS.
Boring was offset 6' towards north due to underground utility. Cave-in at 25.2'. Hole backfilled with soil cutting and patched with cold asphalt at the surface. Shelby tube sample was taken from an offset boring from 14' – 16'

PAGE 1 OF 1
B-A3-3

Copyright 2022, Commonwealth of Virginia

B-A3-4

PROJECT #: 45893-001
LOCATION: I-95 Express way/Opitz Blvd.
STRUCTURE: MSE WALL

PAGE 1 OF 1

STATION: 23+50 OFFSET: 6 LT
NORTHING: 354937.3133 ft Easting: 3626479.5403 ft
SURFACE ELEVATION: 187.2 ft COORD. DATUM: VA South

FIELD DATA

Date(s) Drilled: 11/16/2021 – 11/16/2021
Drilling Method(s): HSA
SPT Method: Automatic Hammer
Other Test(s): Shelby Tube Sample
Driller: SaLUT, Inc.
Logger: J. Yadeta

GROUND WATER
▽ FIRST ENCOUNTERED AT 22.0 ft DEPTH

LAB DATA

DEPTH (ft)	ELEVATION (ft)	STANDARD PENETRATION TEST HAMMER BLOWS	SOIL RECOVERY (%)	SAMPLE LEGEND	SAMPLE INTERVAL	CORE RECOVERY (%)	ROCK QUALITY DESIGNATION	DIP ° STRATA	DIP ° JOINTS	STRATA LEGEND	LIQUID LIMIT LL	PLASTICITY INDEX PI	MOISTURE CONTENT (%)	FINES CONTENT -#200 (%)
0	185													
		25 40 30	73		1.5 – 3								4.2	
2		7 6 6	60		3.5 – 5								14.8	
4		3 5 6	87		5 – 6								19.4	
6	180	2 4 4	93		7.5 – 8.5								20.8	
8		4 2 3	87		8.5 – 10						55	27	19.7	45.0
10	175	WOH WOH 1	53		10 – 11								20.9	
12		WOH 1 1	75		11 – 12.5						30	9	19.9	46.0
14		WOH 2 3	100		12.5 – 13.5								21.0	
16	170	7 37 50/4"	100		13.5 – 15								22.5	
18					15 – 16									
20	165				16 – 17.5									
22					17.5 – 18.5									
24	160	52/6"	87		18.5 – 20								14.9	
26					20 – 23.5									
28	155				23.5 – 25									
30			33		25 – 28.5								19.4	
					28.5 – 30									

FIELD DESCRIPTION OF STRATA

0.0 / 187.2
18" Asphalt ASPH

1.5 / 185.7
18" Subbase material, Light gray, medium to coarse, SAND AND GRAVEL, trace Silt, very dense, dry CRA

3.0 / 184.2
Gray, fine to coarse, SILTY SAND AND GRAVEL, medium dense, moist SM

5.0 / 182.2
Light brown, fine to medium, SILTY SAND, some Gravel, medium dense, moist SM

8.5 / 178.7
Gray, fine to medium, CLAYEY SAND, trace Gravel, trace root, loose to very loose, moist SC

Shelby tube sample was taken from an offset boring from 14' – 16'

18.5 / 168.7
Dark gray, FAT CLAY, medium stiff, damp to wet below 23.5FT CH

24.0 / 163.2
Residual, Light brown-gray, SILT DRIVED FROM DECOMPOSITION OF BED ROCK, hard, dry. HARD AUGERING BELOW 27.5FT ML

30.0 / 157.2
Boring terminated at 30ft

REMARKS: Rig Type: Acker XLS.
Cave-in at 23.8'. Hole backfilled with soil cutting and patched with cold asphalt at the surface.

PAGE 1 OF 1
B-A3-4

Copyright 2022, Commonwealth of Virginia

B-A3-5

PROJECT #: 45893-001
LOCATION: I-95 Express way/Opitz Blvd.
STRUCTURE: MSE WALL

PAGE 1 OF 1

STATION: 22+00 OFFSET: 35 RT
NORTHING: 354785.0818 ft Easting: 3626468.6903 ft
SURFACE ELEVATION: 183.5 ft COORD. DATUM: VA South

FIELD DATA

Date(s) Drilled: 11/29/2021 – 11/29/2021
Drilling Method(s): HSA
SPT Method: Automatic Hammer
Other Test(s):
Driller: SaLUT, Inc.
Logger: J. Yadeta

GROUND WATER
NOT ENCOUNTERED DURING DRILLING

LAB DATA

DEPTH (ft)	ELEVATION (ft)	STANDARD PENETRATION TEST HAMMER BLOWS	SOIL RECOVERY (%)	SAMPLE LEGEND	SAMPLE INTERVAL	CORE RECOVERY (%)	ROCK QUALITY DESIGNATION	DIP ° STRATA	DIP ° JOINTS	STRATA LEGEND	LIQUID LIMIT LL	PLASTICITY INDEX PI	MOISTURE CONTENT (%)	FINES CONTENT -#200 (%)
0	185													
		4 7 5	67		2 – 3.5								17.4	
2	180	4 7 6	73		3.5 – 5								15.4	27.0
4		3 3 3	87		5 – 6								22.2	
6	175	4 3 4	80		7.5 – 8.5						46	21	16.6	35.0
8		2 4 4	87		8.5 – 10								14.5	
10	170	3 2 3	33		10 – 11								16.9	
12		2 2 2	100		11 – 12.5								17.8	
14	165	3 3 4	67		12.5 – 13.5								25.9	
16					13.5 – 15									
18	160				15 – 16									
20					16 – 17.5									
22	155				17.5 – 18.5									
24					18.5 – 20									
26	150				20 – 23.5									
28					23.5 – 25									
30					25 – 28.5									
					28.5 – 30									

FIELD DESCRIPTION OF STRATA

0.0 / 183.5
15" Asphalt ASPH

1.3 / 182.2
9" Subbase material, Gray, medium to coarse, SAND AND GRAVEL, dry CRA

2.0 / 181.5
Fill, Tan-light brown, fine to medium, POORLY GRADED SAND WITH SILT, trace Gravel, medium dense, moist SP-SM

7.0 / 176.5
Fill, Gray, fine to medium, CLAYEY, SILTY SAND, seam of clay at 7ft to 7.3ft, trace Gravel, trace to some woods, loose, moist SC

16.0 / 167.5
Residual, Brown-light gray, fine to medium, POORLY GRADED SAND WITH SILT, clay seam, very loose, moist SP-SM

19.0 / 164.5
Residual, Gray, black, lithified, SILT derived from decomposition of parent rock, trace rock fragments, medium stiff, moist ML

20.0 / 163.5
Boring terminated at 20ft.

REMARKS: Rig Type: Acker XLS.
Cave-in at 15.7'. Hole backfilled with soil cutting and patched with cold asphalt at the surface.

PAGE 1 OF 1
B-A3-5

Copyright 2022, Commonwealth of Virginia

257-38A_107.dgn

SPT_LOGBI-95 EXPRESS LANE- OPITZ BLVD BORINGS.GPJ;SPT7.GDT;gINT_version 8.30.0041/6/22;Whitman, Requardt and Associates

A copy of the original signed geotechnical submittal is on file in the District Office.

The subsurface information shown on the boring logs in these plans was obtained with reasonable care and recorded in good faith solely for use by the Department in establishing design controls for the project. The Department has no reason to suspect that such information is not reasonably accurate as an approximate indication of the subsurface conditions at the sites where the borings were taken. The Department does not in any way warrant or guarantee that such data can be projected as indicative of conditions beyond the limits of the borings shown; and any such projections by bidders are purely interpretive and altogether speculative. Further, the Department does not in any way guarantee, either expressly or by implication, the sufficiency of the information for bid purposes.

The boring logs are made available to bidders in order that they may have access to subsurface data identical to that which is possessed by the Department, and are not intended as a substitute for personal investigation, interpretation and judgment by the bidders.

© 2022, Commonwealth of Virginia

No.	Description	Date
	Revisions	

COMMONWEALTH OF VIRGINIA
DEPARTMENT OF TRANSPORTATION

STRUCTURE AND BRIDGE DIVISION

ENGINEERING GEOLOGY
4 OF 5

Designed: JBH
Drawn: JBH
Checked: R.T.S.

Date	Plan No.	Sheet No.
July 2022	257-38A	107 of 125

STATE	FEDERAL AID		STATE		SHEET NO.
	ROUTE	PROJECT	ROUTE	PROJECT	
VA.	—		2000	0095-076-299, B688	108

VDOT Virginia Department of Transportation

PROJECT #: 45893-001
LOCATION: I-95 Express way/Opitz Blvd.
STRUCTURE: MSE WALL

B-A3-6
PAGE 1 OF 1

STATION: 21+00 OFFSET: 2 LT
NORTHING: 354697.7435 ft Easting: 3626407.9003 ft
SURFACE ELEVATION: 184.9 ft COORD. DATUM: VA South

FIELD DATA

Date(s) Drilled: 11/15/2021 – 11/15/2021
Drilling Method(s): HSA
SPT Method: Automatic Hammer
Other Test(s):
Driller: SaLUT, Inc.
Logger: J. Yadeta

GROUND WATER
NOT ENCOUNTERED DURING DRILLING

LAB DATA

DEPTH (ft)	ELEVATION (ft)	SOIL: STANDARD PENETRATION TEST HAMMER BLOWS	SOIL: SOIL RECOVERY (%)	SOIL: SAMPLE LEGEND	SOIL: SAMPLE INTERVAL	ROCK: CORE RECOVERY (%)	ROCK: ROCK QUALITY DESIGNATION	ROCK: DIP ° STRATA	ROCK: DIP ° JOINTS	STRATA LEGEND	FIELD DESCRIPTION OF STRATA	LIQUID LIMIT LL	PLASTICITY INDEX PI	MOISTURE CONTENT (%)
											0.0 / 184.9 19" Asphalt ASPH			
											1.58 / 183.32 17" Subbase material, Light gray, medium to coarse, SILTY SAND AND GRAVEL, medium dense, moist CRA			4.1
											3.0 / 181.9 Possible fill, Light brown, medium to coarse, SILTY SAND WITH SOME FINE GRAVEL, layer of elastic SILT binder from 6' to 6.5', medium dense, moist SM			22.4
											7.0 / 177.9 Residual, Light brown, light gray, medium to coarse, POORLY GRADED SAND WITH SILT, trace Gravel, medium dense, moist SP			31.6
														16.0
														15.1
														17.1
														14.8
														17.2
											20.0 / 164.9 Boring terminated at 20ft			

REMARKS: Rig Type: Acker XLS.
Cave-in at 13.9'. Hole backfilled with soil cutting and patched with cold asphalt at the surface.

PAGE 1 OF 1
B-A3-6

Copyright 2022, Commonwealth of Virginia

VDOT Virginia Department of Transportation

PROJECT #: 45893-001
LOCATION: I-95 Express way/Opitz Blvd.
STRUCTURE: MSE WALL

B-A3-7
PAGE 1 OF 1

STATION: 19+99 OFFSET: 33 RT
NORTHING: 354591.7507 ft Easting: 3626417.4743 ft
SURFACE ELEVATION: 181.6 ft COORD. DATUM: VA South

FIELD DATA

Date(s) Drilled: 11/30/2021 – 11/30/2021
Drilling Method(s): HSA
SPT Method: Automatic Hammer
Other Test(s):
Driller: SaLUT, Inc.
Logger: J. Yadeta

GROUND WATER
NOT ENCOUNTERED DURING DRILLING

LAB DATA

DEPTH (ft)	ELEVATION (ft)	SOIL: STANDARD PENETRATION TEST HAMMER BLOWS	SOIL: SOIL RECOVERY (%)	SOIL: SAMPLE LEGEND	SOIL: SAMPLE INTERVAL	ROCK: CORE RECOVERY (%)	ROCK: ROCK QUALITY DESIGNATION	ROCK: DIP ° STRATA	ROCK: DIP ° JOINTS	STRATA LEGEND	FIELD DESCRIPTION OF STRATA	LIQUID LIMIT LL	PLASTICITY INDEX PI	MOISTURE CONTENT (%)	FINES CONTENT -#200 (%)
											0.0 / 181.6 15" Asphalt ASPH				
											1.25 / 180.35 9" Subbase material, Gray, medium to coarse, SAND AND GRAVEL, dry CRA			7.8	
											2.0 / 179.6 Fill, Tan-light gray, fine to medium, POORLY GRADED SAND WITH SILT, trace elastic fine, medium dense to loose, moist SP-SM			29.0	
											6.0 / 175.6 Fill, Tan, black spotting, fine to medium, POORLY GRADED SAND, trace Silt, loose to medium dense, moist SP			14.8	20.0
														20.0	
											11.0 / 170.6 Possible fill, Brown, fine to medium, CLAYEY, SILTY SAND, trace Gravel, loose, moist SC-SM			35.3	
											13.5 / 168.1 Light gray, fine to medium, POORLY GRADED SAND WITH SILT, medium dense, moist SP-SM			15.5	
											15.0 / 166.6 Boring terminated at 15ft.				

REMARKS: Rig Type: Acker XLS.
Cave-in at 11.8'. Hole backfilled with soil cutting and patched with cold asphalt at the surface.

PAGE 1 OF 1
B-A3-7

Copyright 2022, Commonwealth of Virginia

SPT_LOG1-95 EXPRESS LANE- OPITZ BLVD BORINGS.GPJ SPT7.GDT dgINT_version 8.30.0041 6/22/Whitman, Requardt and Associates

SPT_LOG8-I-95 EXPRESS LANE- OPITZ BLVD BORINGS.GPJ SPT7.GDT dgINT_version 8.30.0041 6/22/Whitman, Requardt and Associates

257-38A_108.dgn

A copy of the original signed geotechnical submittal is on file in the District Office.

The subsurface information shown on the boring logs in these plans was obtained with reasonable care and recorded in good faith solely for use by the Department in establishing design controls for the project. The Department has no reason to suspect that such information is not reasonably accurate as an approximate indication of the subsurface conditions at the sites where the borings were taken. The Department does not in any way warrant or guarantee that such data can be projected as indicative of conditions beyond the limits of the borings shown; and any such projections by bidders are purely interpretive and altogether speculative. Further, the Department does not in any way guarantee, either expressly or by implication, the sufficiency of the information for bid purposes.

The boring logs are made available to bidders in order that they may have access to subsurface data identical to that which is possessed by the Department, and are not intended as a substitute for personal investigation, interpretation and judgment by the bidders.

© 2022, Commonwealth of Virginia

No.	Description	Date
	Revisions	

COMMONWEALTH OF VIRGINIA
DEPARTMENT OF TRANSPORTATION

STRUCTURE AND BRIDGE DIVISION

ENGINEERING GEOLOGY
5 OF 5

Designed: JBH	Date	Plan No.	Sheet No.
Drawn: JBH	July 2022	257-38A	108 of 125
Checked: RTS			

STATE	FEDERAL AID		STATE		SHEET NO.
	ROUTE	PROJECT	ROUTE	PROJECT	
VA.	—		95	0095-076-299, B688	109

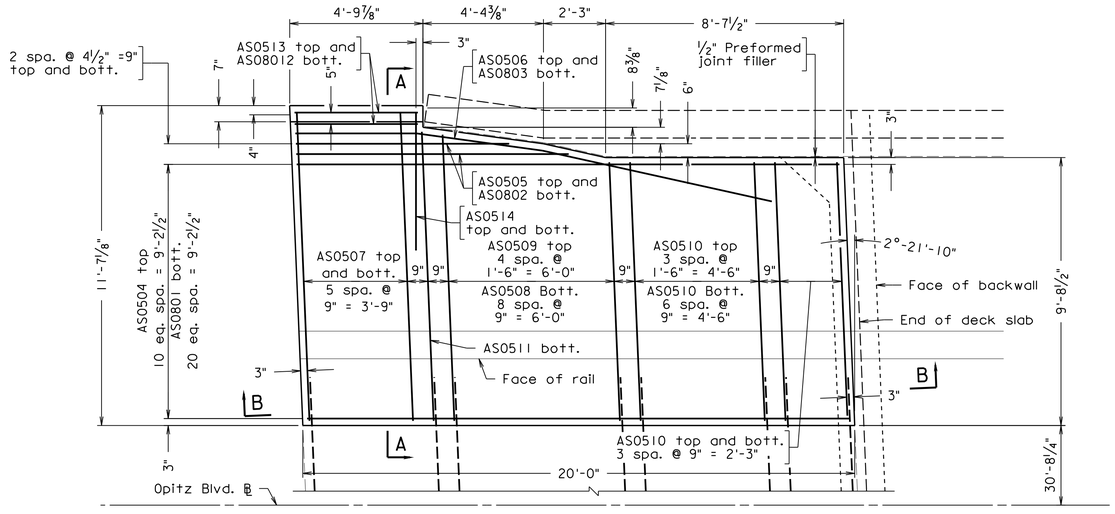

PLAN

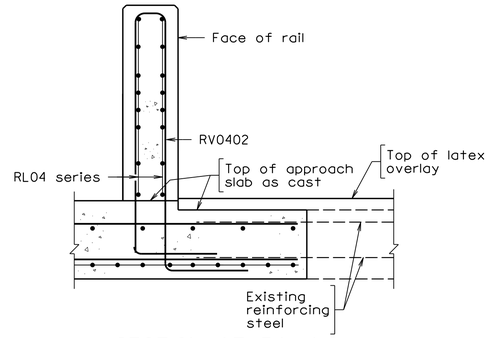

SECTION AT RAILING

See Railing Details sheet 79.

Scale: ¾" = 1'-0"

SECTION A-A

Scale: ¾" = 1'-0"

SECTION B-B

Scale: ¾" = 1'-0"

Notes:

If material under approach slab will be exposed for more than two weeks, prime the material with 0.35 gal per sq. yd. liquid asphalt material type RC-70, RC-250 or MC-250. Cost included in select backfill (see sheet 8).

Approach slab shall be grooved in accordance with Section 404.07(f) of the Specifications. Payment for grooving is included in bridge deck grooving quantities.

REINFORCING STEEL SCHEDULE

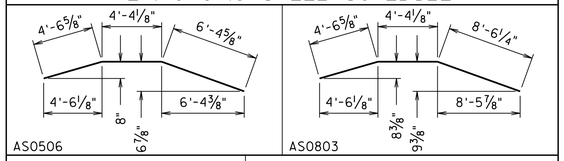

AS0802 - from 7'-8" to 9'-10" by 2'-2"
AS0505 - from 7'-8" to 9'-10" by 2'-2"
AS0508 - from 9'-2" to 10'-2" by 1½"
AS0509 - from 9'-2" to 10'-2" by 3"

AS0802
AS0505
AS0508
AS0509

varies

Mark	No.	Size	Pin ø	Length	Location
AS0801	21	#8	——	19'-6"	Bottom longitudinal
AS0802	2	#8	——	VARIES	Bottom longitudinal
AS0803	1	#8	6"	17'-4⅞"	Bottom longitudinal
AS0504	11	#5	——	19'-6"	Top longitudinal
AS0505	2	#5	——	VARIES	Top longitudinal
AS0506	1	#5	3¾"	15'-3¼"	Top longitudinal
AS0507	12	#5	——	11'-1"	Top and bottom transverse
AS0508	9	#5	——	VARIES	Bottom transverse
AS0509	5	#5	——	VARIES	Top transverse
AS0510	19	#5	——	9'-2"	Top and bottom transverse
AS0511	1	#5	——	10'-4"	Bottom transverse
AS0812	2	#8	——	4'-3"	Bottom longitudinal
AS0513	2	#5	——	4'-3"	Top longitudinal
AS0514	2	#5	——	5'-0"	Top and bottom transverse

Dimensions in bending diagram are out-to-out of bars.
Number of bars shown is for one approach slab.

ESTIMATED QUANTITIES

	Concrete Class A4 Bridge Appr. Slab ⊗ CY	Corrosion Resistant Reinforcing Steel Class II , Grade 60 min. ⊗ LB
Abutment A	13.2	1,959

⊗ Denotes items to be paid for on basis of plan quantities in accordance with Road and Bridge Specifications.

JEREMY SCHLUSSEL
Lic. No. 033974
COMMONWEALTH OF VIRGINIA
PROFESSIONAL ENGINEER

Jeremy Schlussel
2022.07.08 19:02:35 -04'00'

WHITMAN REQUARDT & ASSOCIATES
RICHMOND, VA
STRUCTURAL ENGINEER

No.	Description	Date
Revisions		

COMMONWEALTH OF VIRGINIA
DEPARTMENT OF TRANSPORTATION
STRUCTURE AND BRIDGE DIVISION

APPROACH SLAB A

Designed: CRR	Date	Plan No.	Sheet No.
Drawn: CRR	July 2022	257-38A	109 of 125
Checked: MRD			

Scale: ⅜" = 1'-0" unless otherwise noted.

© 2022, Commonwealth of Virginia

BAS-AG-ILMOD04-30-2021

257-38A_109.dgn

STATE	FEDERAL AID		STATE		SHEET NO.
	ROUTE	PROJECT	ROUTE	PROJECT	
VA.	—		95	0095-076-299, B688	110

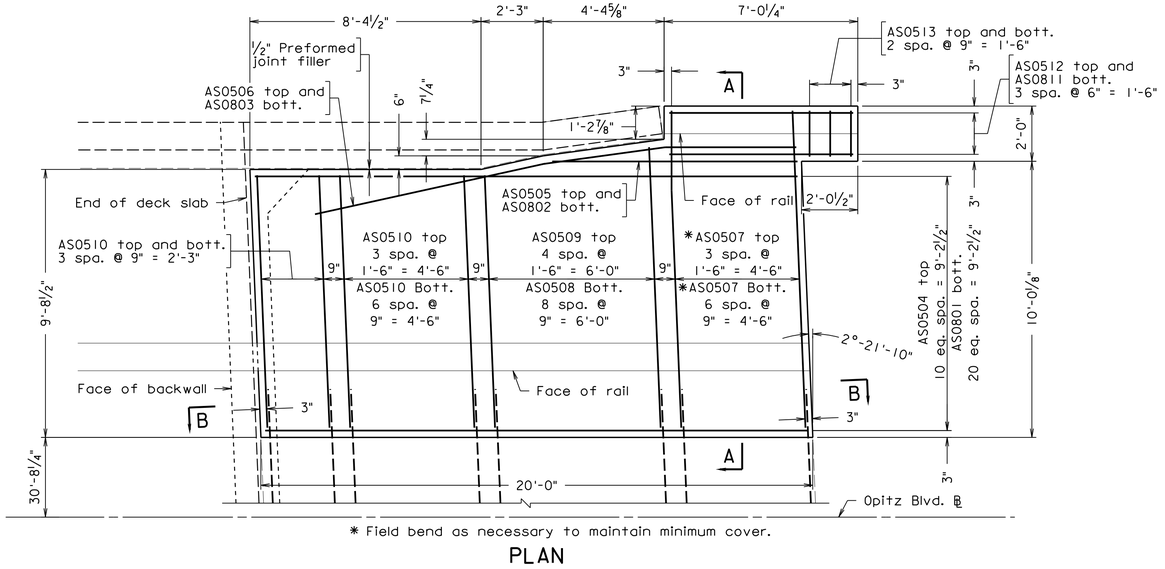

* Field bend as necessary to maintain minimum cover.

PLAN

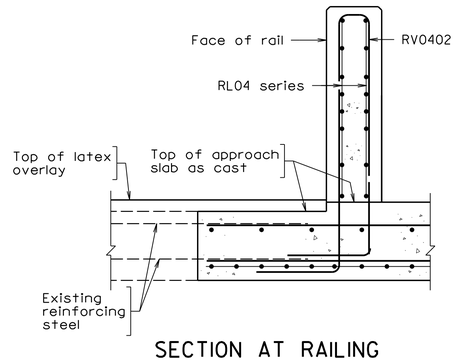

SECTION AT RAILING

See Railing Details sheet 79.

Scale: ¾" = 1'-0"

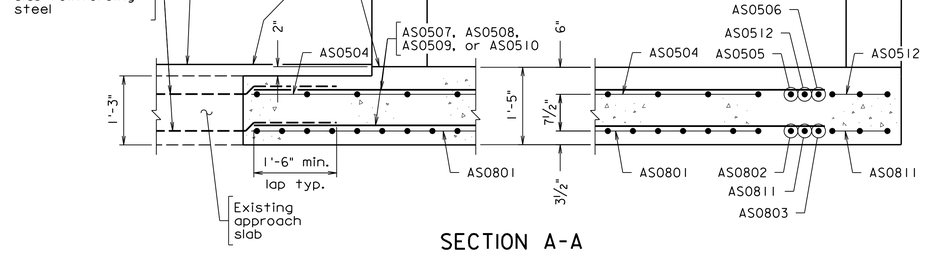

SECTION A-A

Scale: ¾" = 1'-0"

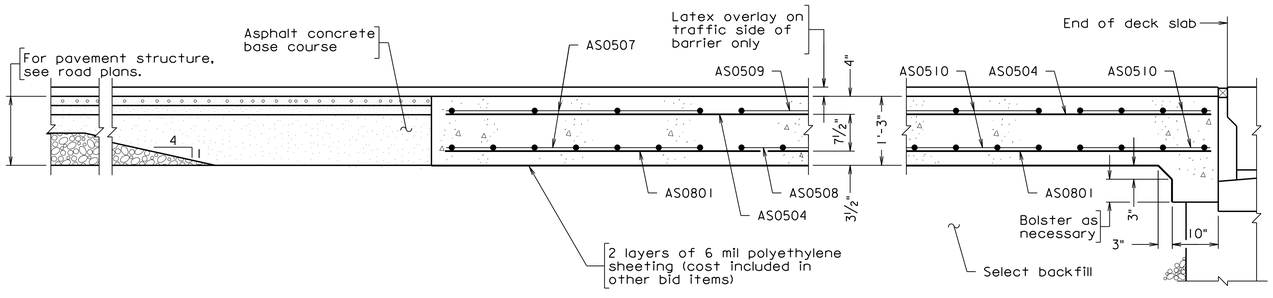

SECTION B-B

Scale: ¾" = 1'-0"

Notes:

If material under approach slab will be exposed for more than two weeks, prime the material with 0.35 gal per sq. yd. liquid asphalt material type RC-70, RC-250 or MC-250. Cost included in select backfill (see sheet 8).

Approach slab shall be grooved in accordance with Section 404.07(f) of the Specifications. Payment for grooving is included in bridge deck grooving quantities.

REINFORCING STEEL SCHEDULE

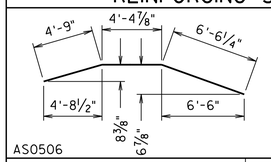

AS0508
from 9'-2" to 10'-2" by 1½"

AS0509
from 9'-2" to 10'-2" by 3"

varies

AS0508
AS0509

Mark	No.	Size	Pin ø	Length	Location
AS0801	21	#8	——	19'-6"	Bottom longitudinal
AS0802	1	#8	——	8'-3"	Bottom longitudinal
AS0803	1	#8	6"	17'-8⅛"	Bottom longitudinal
AS0504	11	#5	——	19'-6"	Top longitudinal
AS0505	1	#5	——	8'-3"	Top longitudinal
AS0506	1	#5	3¾"	15'-8"	Top longitudinal
AS0507	11	#5	——	10'-2¼"	Top and bottom transverse
AS0508	9	#5	——	VARIES	Bottom transverse
AS0509	5	#5	——	VARIES	Top transverse
AS0510	19	#5	——	9'-2"	Top and bottom transverse
AS0811	4	#8	——	6'-6"	Bottom longitudinal
AS0512	4	#5	——	6'-6"	Top longitudinal
AS0513	6	#5	——	1'-6"	Top and bottom transverse

Dimensions in bending diagram are out-to-out of bars.
Number of bars shown is for one approach slab.

ESTIMATED QUANTITIES

	Concrete Class A4 Bridge Appr. Slab ⊗ CY	Corrosion Resistant Reinforcing Steel Class II , Grade 60 min. ⊗ LB
Abutment B	11.0	1,956

⊗ Denotes items to be paid for on basis of plan quantities in accordance with Road and Bridge Specifications.

COMMONWEALTH OF VIRGINIA
JEREMY SCHLUSSEL
Lic. No. 033974
PROFESSIONAL ENGINEER
Jeremy Schlussel
2022.07.08 19:02:16 -04'00'
WHITMAN REQUARDT & ASSOCIATES
RICHMOND, VA
STRUCTURAL ENGINEER

No.	Description	Date
	Revisions	

COMMONWEALTH OF VIRGINIA
DEPARTMENT OF TRANSPORTATION

STRUCTURE AND BRIDGE DIVISION

APPROACH SLAB B

Designed: CRR
Drawn: CRR
Checked: MRD

Date	Plan No.	Sheet No.
July 2022	257-38A	110 of 125

Scale: ⅜" = 1'-0" unless otherwise noted.

© 2022, Commonwealth of Virginia

257-38A_110.dgn

BAS-AG-1LM0004-30-2021

STATE	FEDERAL AID		STATE		SHEET NO.
	ROUTE	PROJECT	ROUTE	PROJECT	
VA.	—		95	0095-076-299, B688	111

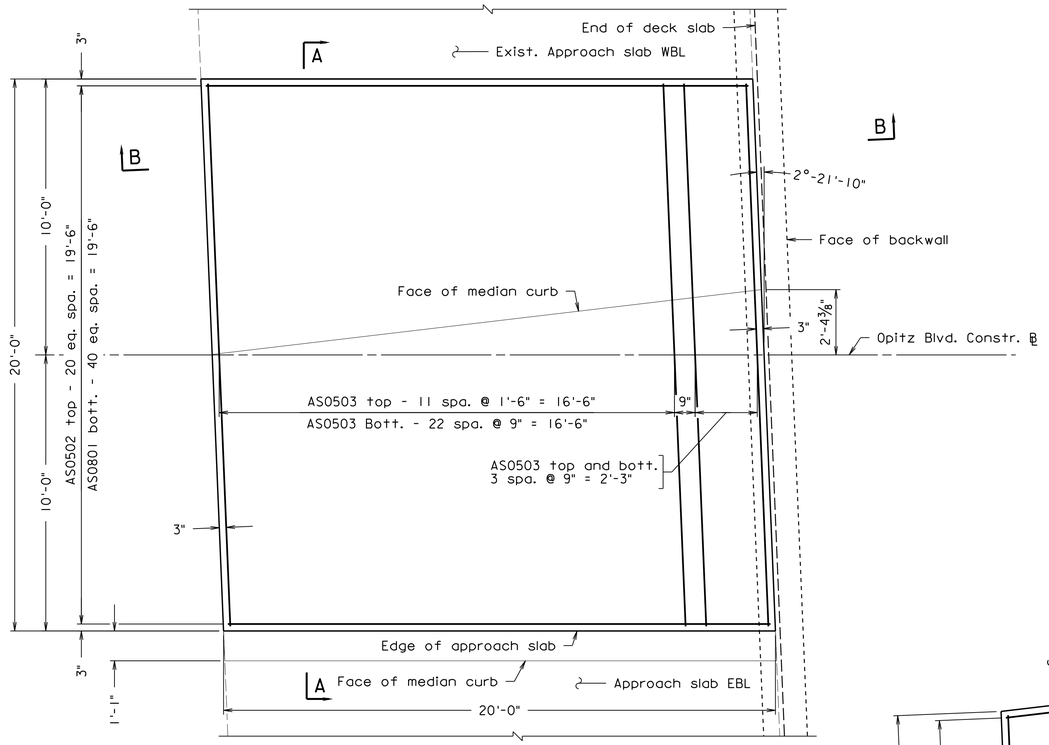

PLAN

Median reinforcing steel not shown for clarity.

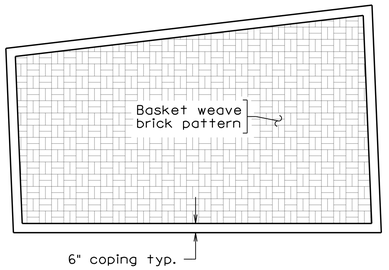

MEDIAN ON APPROACH SLAB BRICK PATTERN PLAN

Scale: ¼" = 1'-0"

Notes:

If material under approach slab will be exposed for more than two weeks, prime the material with 0.35 gal per sq. yd. liquid asphalt material type RC-70, RC-250 or MC-250. Cost included in select backfill (see sheet 8).

Approach slab shall be grooved in accordance with Section 404.07(f) of the Specifications. Payment for grooving is included in bridge deck grooving quantities.

Maximum relief for architectural treatment on median curb shall be ¼".

REINFORCING STEEL SCHEDULE

from 10'-7" to 13'-0" by 1½"" varies

MA0402

Mark	No.	Size	Pin ø	Length	Location
AS0801	41	#8	—	19'-6"	Bottom longitudinal
AS0502	21	#5	—	19'-6"	Top longitudinal
AS0503	43	#5	—	19'-6"	Top and bottom transverse
MA0401	14	#4	—	19'-6"	Median longitudinal
MA0402	21	#4	—	VARIES	Median transverse

Dimensions in bending diagram are out-to-out of bars.
Number of bars shown is for one approach slab.

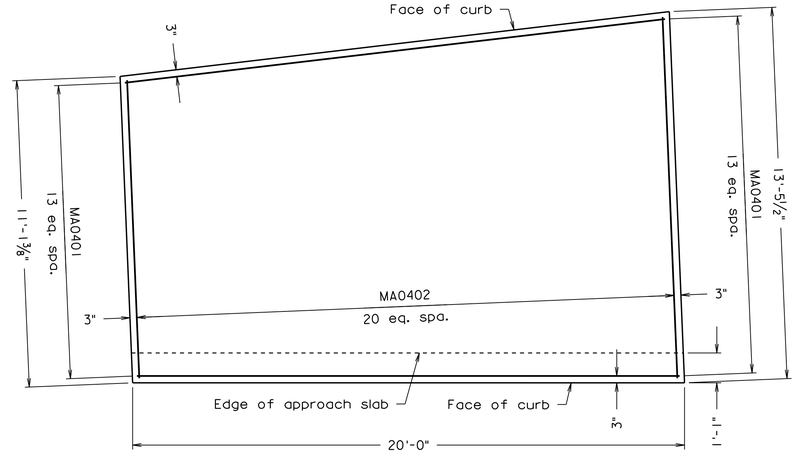

MEDIAN PLAN

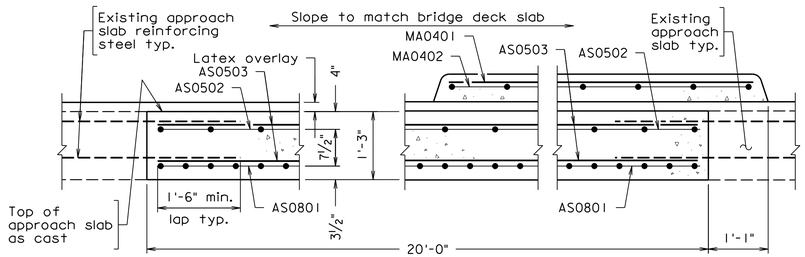

SECTION A-A @ ABUTMENT A

Scale: ¾" = 1'-0"

ESTIMATED QUANTITIES

		Concrete Class A4 Bridge Appr. Slab ⊗ CY	Corrosion Resistant Reinforcing Steel, Class II, Grade 60 min. ⊗ LB
Abutment A	Approach slab	18.7	3,437
	Median	4.5	347
Totals		23.2	3,784

⊗ Denotes items to be paid for on basis of plan quantities in accordance with Road and Bridge Specifications.

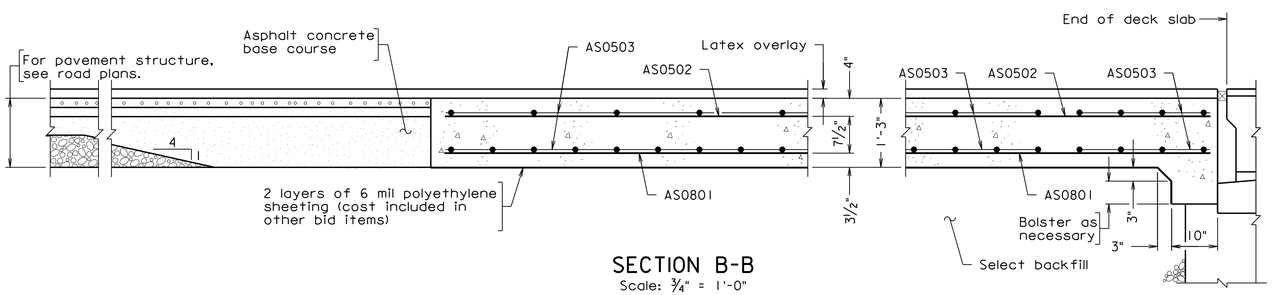

SECTION B-B

Scale: ¾" = 1'-0"

Scale: ⅜" = 1'-0" unless otherwise noted

© 2022, Commonwealth of Virginia

BAS-SW-IL MOD. 04-30-2021

257-38A_111.dgn

COMMONWEALTH OF VIRGINIA
JEREMY SCHLUSSEL
Lic. No. 033974
PROFESSIONAL ENGINEER

Jeremy Schlussel
2022.07.08 19:01:23 -04'00'

WHITMAN REQUARDT & ASSOCIATES
RICHMOND, VA
STRUCTURAL ENGINEER

No.	Description	Date
Revisions		

COMMONWEALTH OF VIRGINIA
DEPARTMENT OF TRANSPORTATION

STRUCTURE AND BRIDGE DIVISION

APPROACH SLAB C AT ABUTMENT A

Designed: CRR
Drawn: CRR
Checked: MRD

Date	Plan No.	Sheet No.
July 2022	257-38A	111 of 125

STATE	FEDERAL AID		STATE		SHEET NO.
	ROUTE	PROJECT	ROUTE	PROJECT	
VA.	—		95	0095-076-299, B688	111

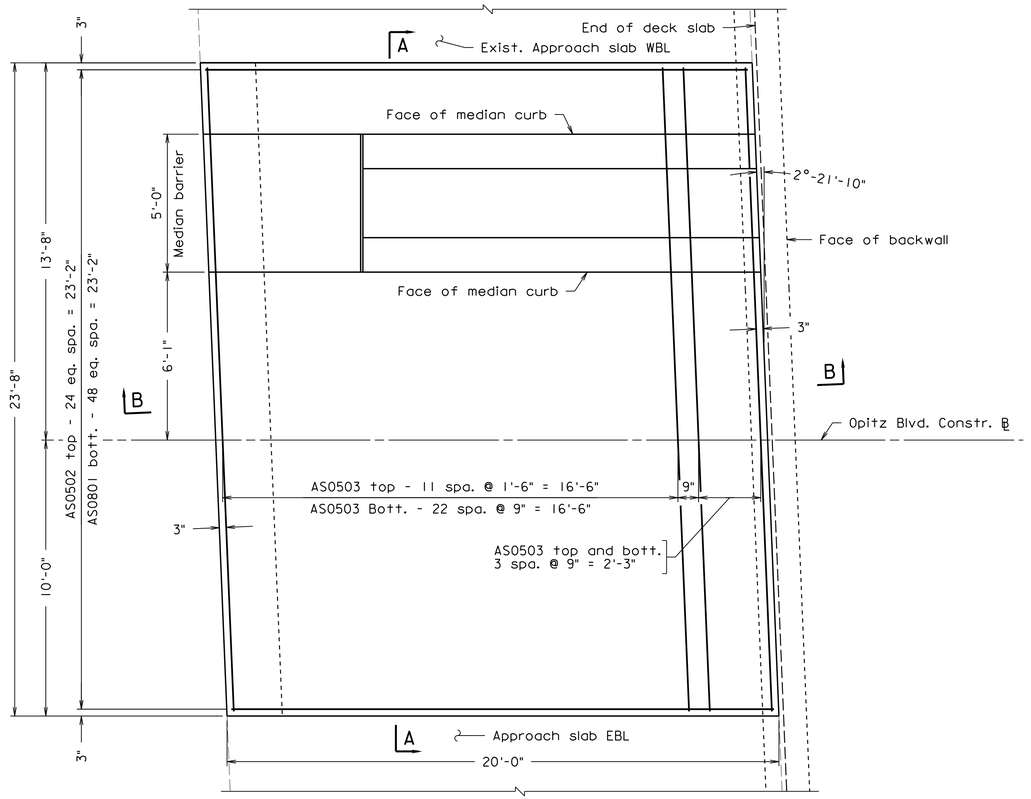

PLAN

Median barrier reinforcing steel not shown for clarity.

Notes:

If material under approach slab will be exposed for more than two weeks, prime the material with 0.35 gal per sq. yd. liquid asphalt material type RC-70, RC-250 or MC-250. Cost included in select backfill (see sheet 8).

Approach slab shall be grooved in accordance with Section 404.07(f) of the Specifications. Payment for grooving is included in bridge deck grooving quantities.

REINFORCING STEEL SCHEDULE

Mark	No.	Size	Pin ø	Length	Location
AS0801	49	#8	——	19'-6"	Bottom longitudinal
AS0502	25	#5	——	19'-6"	Top longitudinal
AS0503	43	#5	——	23'-2"	Top and bottom transverse

Dimensions in bending diagram are out-to-out of bars.
Number of bars shown is for one approach slab.

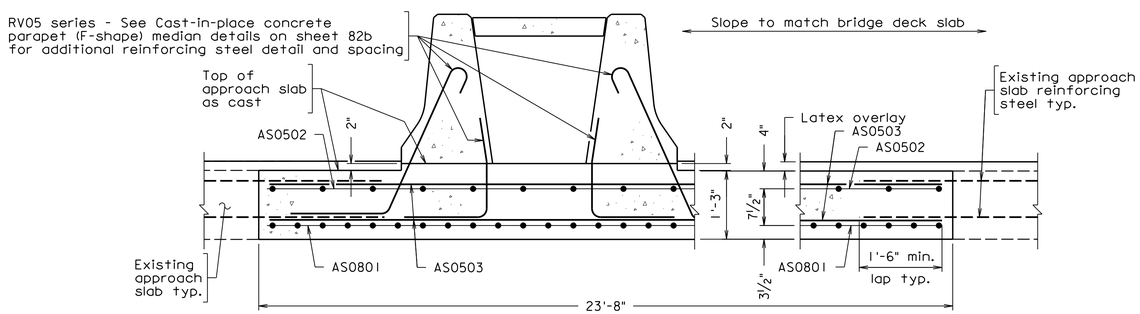

SECTION A-A

Scale: ¾" = 1'-0"

ESTIMATED QUANTITIES

		Concrete Class A4 Bridge Appr. Slab ⊗ CY	Corrosion Resistant Reinforcing Steel, Class II, Grade 60 min. ⊗ LB
Abutment B	Approach slab	22.7	4,098

⊗ Denotes items to be paid for on basis of plan quantities in accordance with Road and Bridge Specifications.

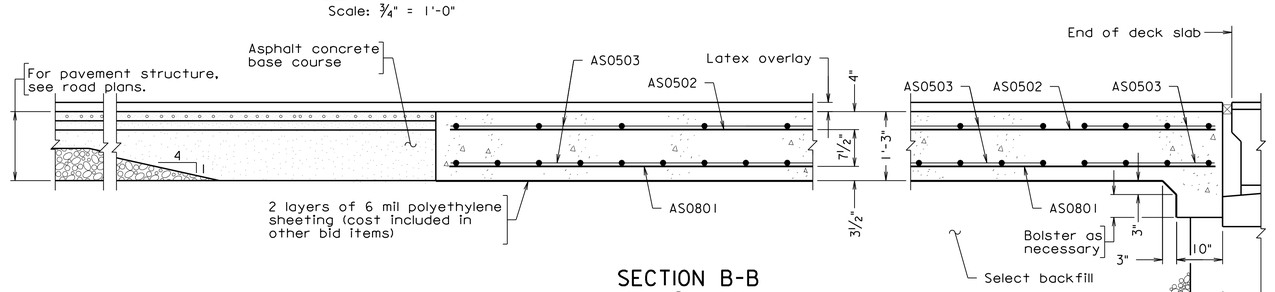

SECTION B-B

Scale: ¾" = 1'-0"

Scale: ⅜" = 1'-0" unless otherwise noted

© 2022, Commonwealth of Virginia

BAS-SW-IL MOD. 04-30-2021

257-38A_111a.dgn

COMMONWEALTH OF VIRGINIA
JEREMY SCHLUSSEL
Lic. No. 033974
PROFESSIONAL ENGINEER

Jeremy Schlussel
2022.07.08 19:01:50 -04'00'

WHITMAN REQUARDT & ASSOCIATES
RICHMOND, VA
STRUCTURAL ENGINEER

No.	Description	Date
	Revisions	

COMMONWEALTH OF VIRGINIA
DEPARTMENT OF TRANSPORTATION

STRUCTURE AND BRIDGE DIVISION

APPROACH SLAB C AT ABUTMENT B

Designed: CRR	Date	Plan No.	Sheet No.
Drawn: CRR	July 2022	257-38A	111a of 125
Checked: MAD			

STATE	FEDERAL AID		STATE		SHEET NO.
	ROUTE	PROJECT	ROUTE	PROJECT	
VA.	—		95	0095-076-299, B688	112

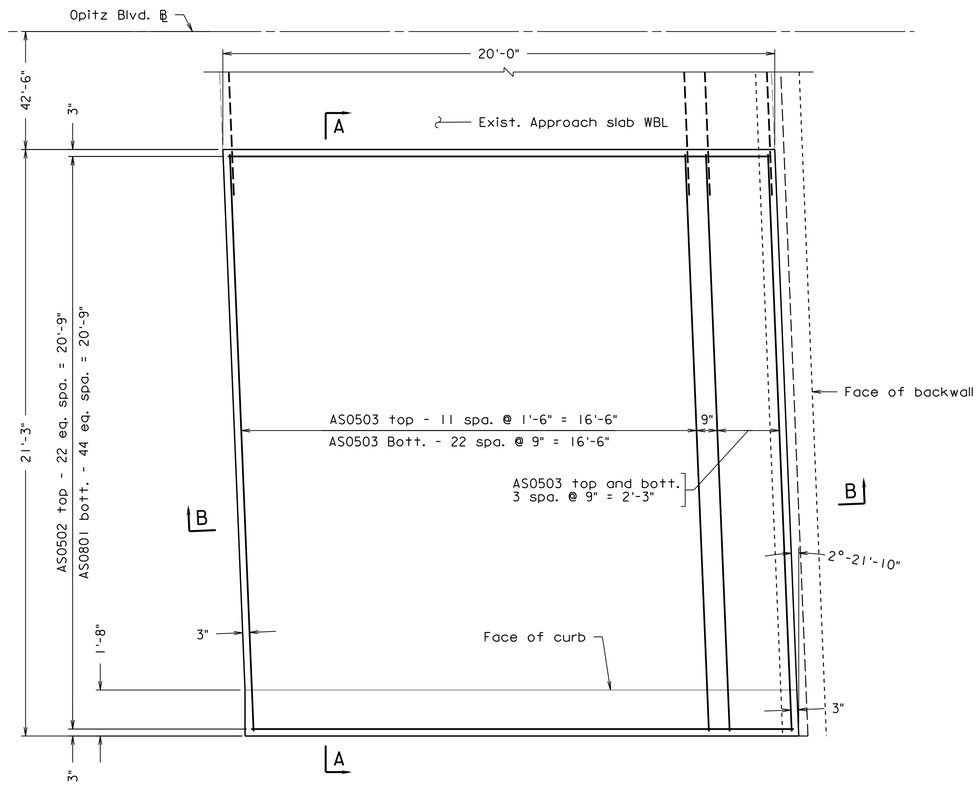

PLAN

Approach slab at Abutment A shown, Abutment B similar.
Parapet reinforcing steel not shown for clarity.

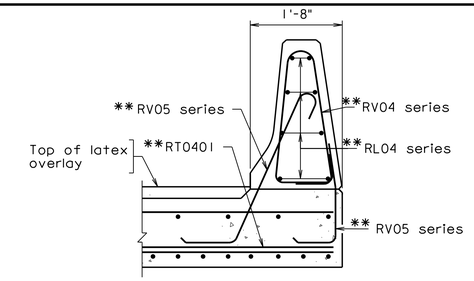

SECTION AT ABUTMENT B PARAPET

**See Cast-In-Place Concrete Parapet Details sheet 82.
Scale: 3/4" = 1'-0"

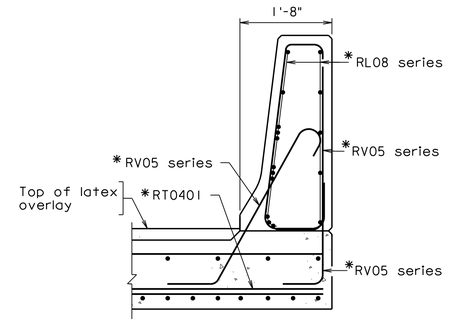

SECTION AT ABUTMENT A PARAPET

*See 42" BPB-4A Details sheet 83.
Scale: 3/4" = 1'-0"

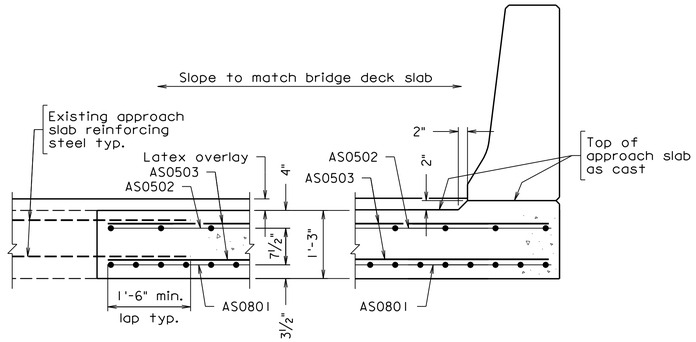

SECTION A-A

Scale: 3/4" = 1'-0"
Section shown for abutment A approach slab, Abutment B similar.

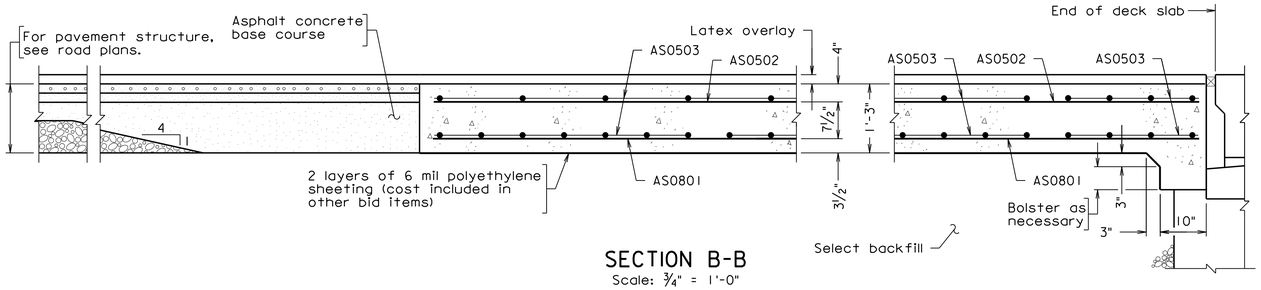

SECTION B-B

Scale: 3/4" = 1'-0"

Notes:

If material under approach slab will be exposed for more than two weeks, prime the material with 0.35 gal per sq. yd. liquid asphalt material type RC-70, RC-250 or MC-250. Cost included in select backfill (see sheet 8).

Approach slab shall be grooved in accordance with Section 404.07(f) of the Specifications. Payment for grooving is included in bridge deck grooving quantities.

REINFORCING STEEL SCHEDULE

Mark	No.	Size	Pin ø	Length	Location
AS0801	45	#8	——	19'-6"	Bottom longitudinal
AS0502	23	#5	——	19'-6"	Top longitudinal
AS0503	43	#5	——	20'-9"	Top and bottom transverse

Dimensions in bending diagram are out-to-out of bars.
Number of bars shown is for one approach slab.

ESTIMATED QUANTITIES

	Concrete Class A4 Bridge Appr. Slab ⊗ CY	Corrosion Resistant Reinforcing Steel Class II , Grade 60 min. ⊗ LB
Abutment A	20.1	3,742
Abutment B	20.1	3,742
Total	40.2	7,484

⊗ Denotes items to be paid for on basis of plan quantities in accordance with Road and Bridge Specifications.

Scale: 3/8" = 1'-0" unless otherwise noted

© 2022. Commonwealth of Virginia

COMMONWEALTH OF VIRGINIA
JEREMY SCHLUSSEL
Lic. No. 033974
PROFESSIONAL ENGINEER

Jeremy Schlussel
2022.07.08 19:04:56 -04'00'

WHITMAN REQUARDT & ASSOCIATES
RICHMOND, VA
STRUCTURAL ENGINEER

BAS-SW-1L MOD. 04-30-2021

257-38A_112.dgn

No.	Description	Date
Revisions		

COMMONWEALTH OF VIRGINIA
DEPARTMENT OF TRANSPORTATION
STRUCTURE AND BRIDGE DIVISION

APPROACH SLAB D

Designed: CRR	Date	Plan No.	Sheet No.
Drawn: CRR	July 2022	257-38A	112 of 125
Checked: MRD			

STATE	FEDERAL AID		STATE		SHEET NO.
	ROUTE	PROJECT	ROUTE	PROJECT	
VA.	—		95	0095-076-299, B688	113

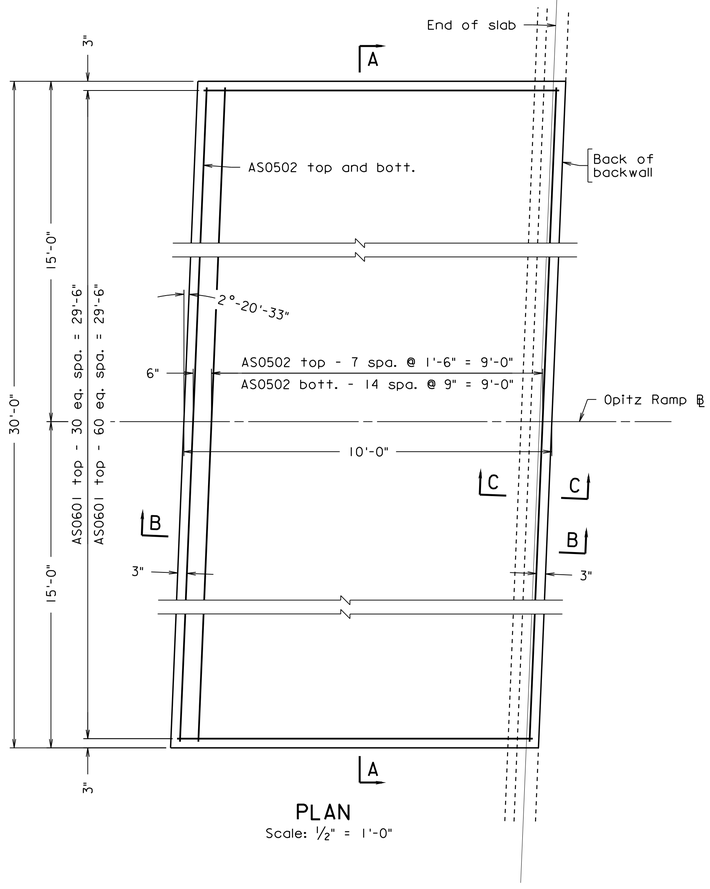

PLAN
Scale: ½" = 1'-0"

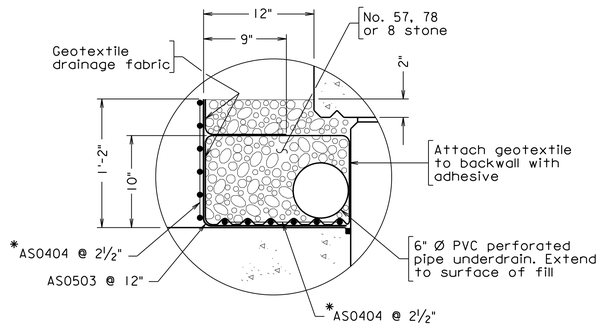

DETAIL A
Scale: 1½" = 1'-0"

* Welded wire 2 x 2 x W10 X W10 may be substituted for for AS0404 bars

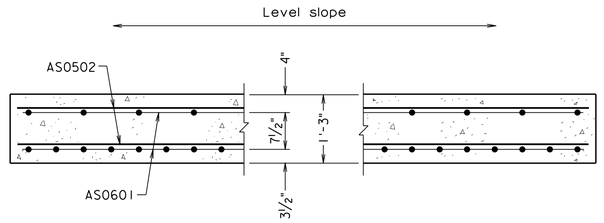

SECTION A-A
Scale: ¾" = 1'-0"

REINFORCING STEEL SCHEDULE

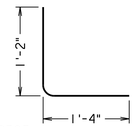

AS0503

Mark	No.	Size	Pin ø	Length	Location
AS0601	92	#6	——	9'-5"	Longitudinal
AS0502	23	#5	——	29'-6"	Transverse
AS0503	31	#5	2½"	2'-5"	Underdrain cage
AS0404	12	#4	——	29'-6"	Underdrain cage

Number of bars shown is for one approach slab.

Dimensions in bending diagram are out-to-out of bars.

ESTIMATED QUANTITIES

	Concrete Class A4 Bridge Approach Slab ⊗ CY	Corrosion Resistant Reinforcing Steel, Class I, Grade 60 min. ⊗ LB
Abutment C	14.3	2,394

⊗ Denotes items to be paid for on basis of plan quantities in accordance with the Road and Bridge Specifications.

Notes:

If material under approach slab will be exposed for more than two weeks, prime the material with 0.35 gal per sq. yd. liquid asphalt material type RC-70, RC-250 or MC-250. Cost included in select backfill (see sheet 8).

The cost of the pipe underdrain, the stone surrounding it, and the geotextile drainage fabric shall be included in the bid price for approach slab concrete.

After screeding, the top surface shall receive a Class I finish in accordance with Section 404.07(a) of the Specifications.

Weld AS0404 or welded wire to AS0503 to form a steel cage. The steel cage shall be secured with dowels in the approach slab. Cost of dowels shall be included in other bid items.

Payment for asphalt is included in the road plans.

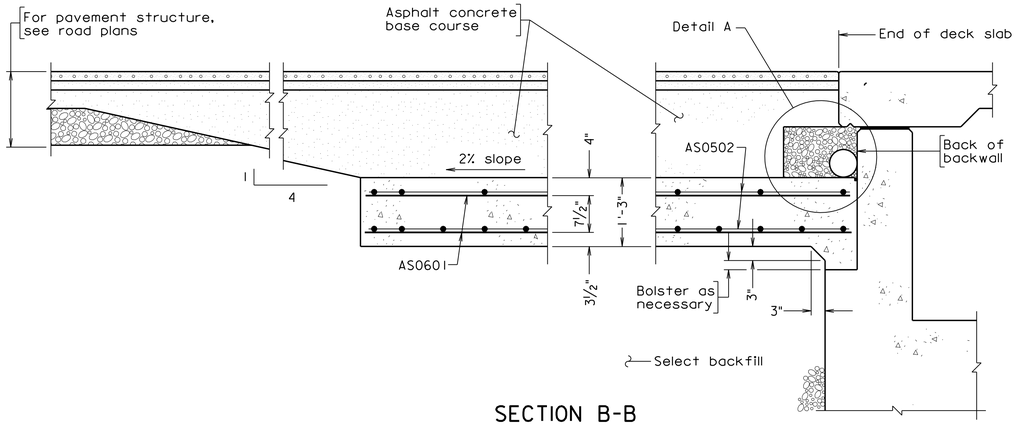

SECTION B-B
Scale: ¾" = 1'-0"

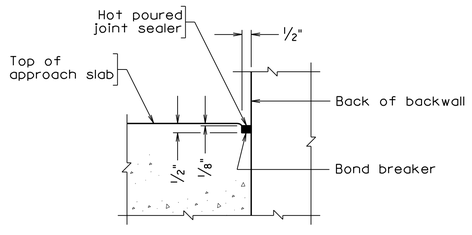

SECTION C-C
Scale: 3" = 1'-0"
Material above approach slab omitted for clarity

JEREMY SCHLUSSEL
Lic. No. 033974
COMMONWEALTH OF VIRGINIA
PROFESSIONAL ENGINEER

Jeremy Schlussel
2022.07.08 19:09:09 -04'00'

WHITMAN REQUARDT & ASSOCIATES
RICHMOND, VA
STRUCTURAL ENGINEER

Sealed and Signed by:
Junyi Meng
Lic. No. 033572
On the date of
April 30, 2021

A copy of the original sealed and signed standard drawing is on file in the Central Office.

VDOT S&B DIVISION
RICHMOND, VA
STRUCTURAL ENGINEER

No.	Description	Date
	Revisions	

COMMONWEALTH OF VIRGINIA
DEPARTMENT OF TRANSPORTATION

STRUCTURE AND BRIDGE DIVISION

BURIED APPROACH SLAB E

Designed: CRR	Date	Plan No.	Sheet No.
Drawn: CRR	July 2022	257-38A	113 of 125
Checked: MRD			

BAS-BD-1R 04-30-2021

257-38A_113.dgn

Scale as noted

© 2022, Commonwealth of Virginia

STATE	FEDERAL AID		STATE		SHEET NO.
	ROUTE	PROJECT	ROUTE	PROJECT	
VA.	—		95	0095-076-299, B688	114

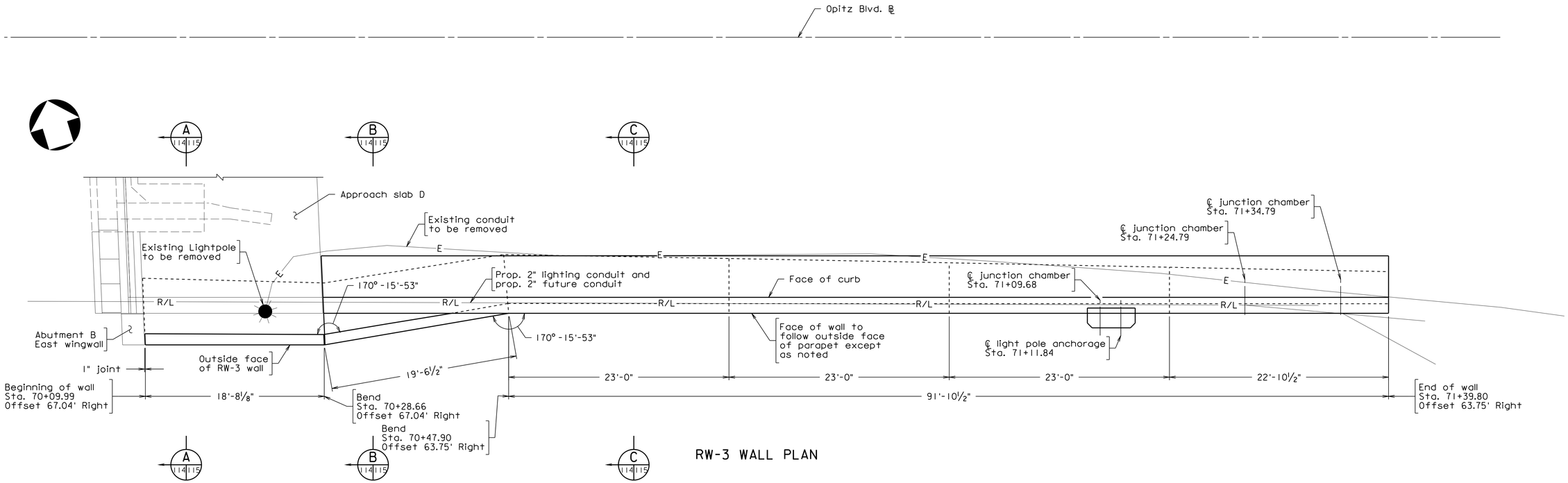

RW-3 WALL PLAN

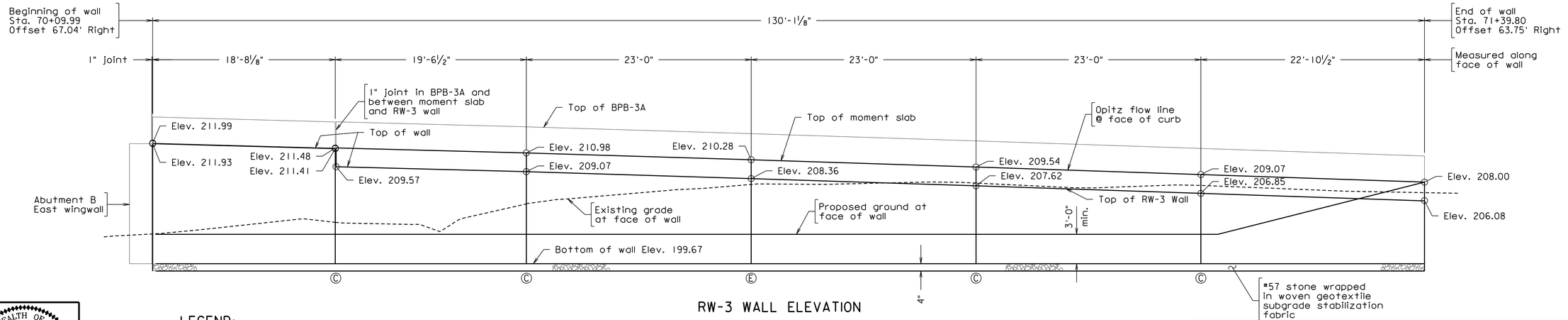

RW-3 WALL ELEVATION

257-38A_114.dgn

LEGEND:

Ⓔ = Expansion joint
Ⓒ = Contraction joint

COMMONWEALTH OF VIRGINIA
JEREMY SCHLUSSEL
Lic. No. 033974
PROFESSIONAL ENGINEER

Jeremy Schlussel
2022.07.08 19:09:28 -04'00'

WHITMAN REQUARDT & ASSOCIATES
RICHMOND, VA
STRUCTURAL ENGINEER

Scale: ⅜" = 1'-0" unless otherwise noted.

© 2022. Commonwealth of Virginia

No.	Description	Date
	Revisions	

COMMONWEALTH OF VIRGINIA
DEPARTMENT OF TRANSPORTATION

STRUCTURE AND BRIDGE DIVISION

RW WALL PLAN AND ELEVATION

Designed: JMC	Date	Plan No.	Sheet No.
Drawn: JMC	July 2022	257-38A	114 of 125
Checked: AC			

STATE	FEDERAL AID		STATE		SHEET NO.
	ROUTE	PROJECT	ROUTE	PROJECT	
VA.	—		95	0095-076-299, B688	115

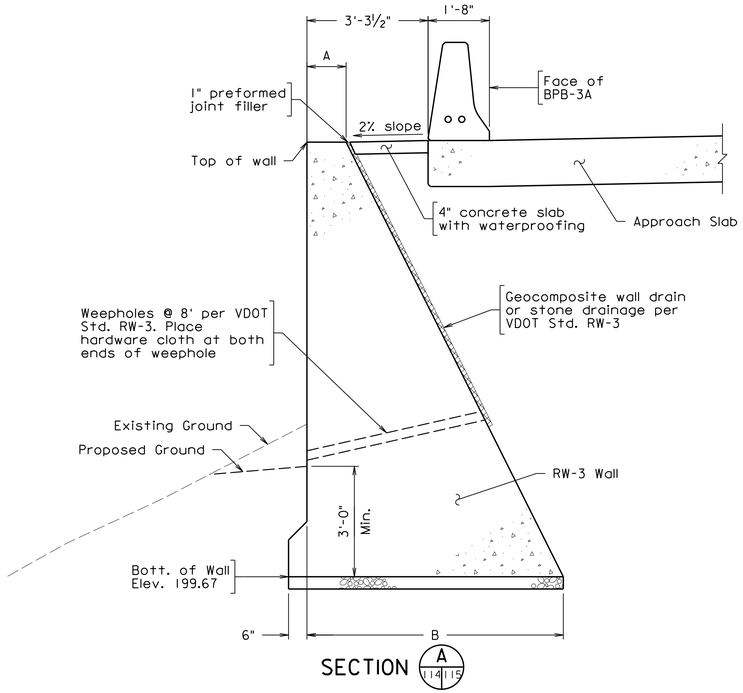

SECTION A (114|115)

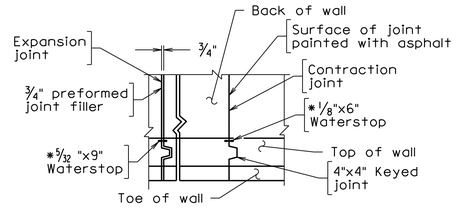

Ⓒ Contraction joints at intervals not exceeding 30'.

Ⓔ Expansion joint at intervals not exceeding 90'.

* Water stops to be elastomeric or other approved material. Dimensions shown are absolute minimum.

CONTRACTION AND EXPANSION JOINT DETAILS

Not to scale

Notes:

Geocomposite wall drain shall conform to Section 245.03(f) of the Specifications.

Geocomposite wall drain, waterproofing, #57 stone, geotextile fabric, and 3" Dia. perforated PVC drain pipe shall be incidental to RW-3 Retaining Wall.

See VDOT Standard RW-3 for the waterproofing detail, weepholes, contraction joint, dimensions A and B, and other details not shown.

Concrete in Modified RW-3 Wall shall be Class C1.

Waterproofing membrane shall be installed on fill side of joint at Abutment B wingwall and expansion joint in accordance with Section 502 of the Specifications.

Wall height "H" defined as difference between top of wall and bottom of wall elevations as shown. Use "H" in VDOT Standard RW-3 to determine dimension "B". Use "B" in VDOT Standard RW-3 to determine dimension "A".

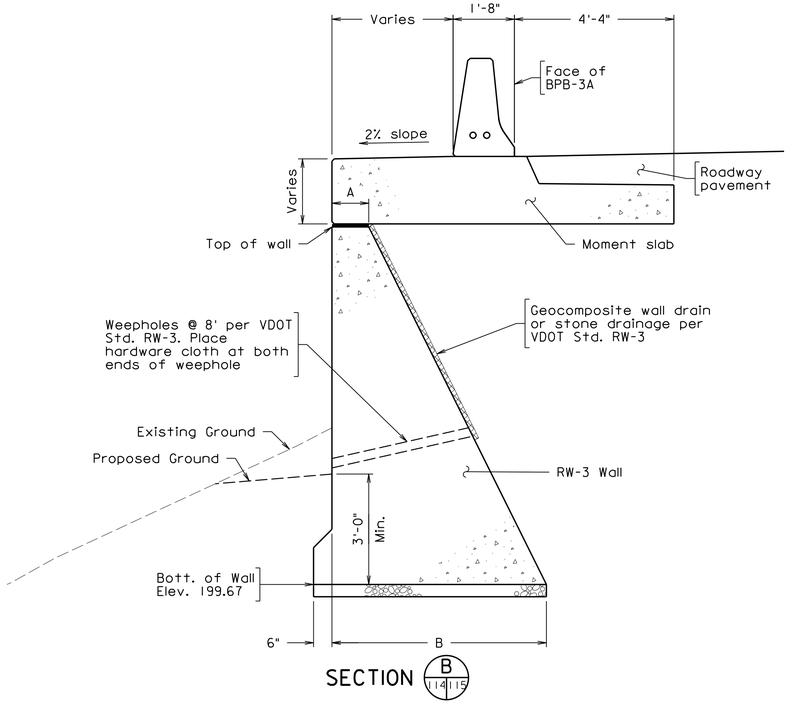

SECTION B (114|115)

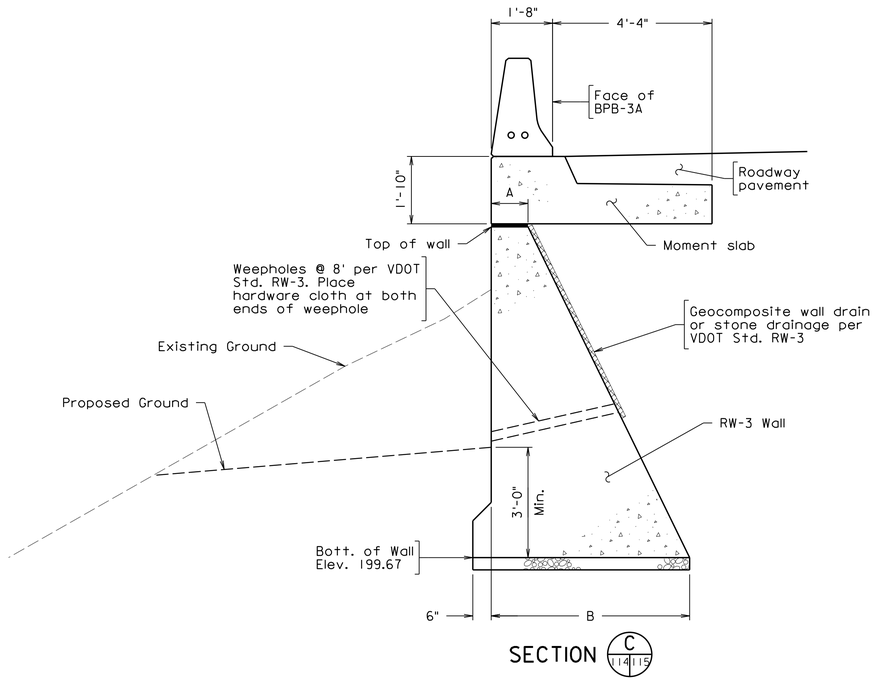

SECTION C (114|115)

257-38A_115.dgn

COMMONWEALTH OF VIRGINIA
JEREMY SCHLUSSEL
Lic. No. 033974
PROFESSIONAL ENGINEER

Jeremy Schlussel
2022.07.08 19:08:26 -04'00'

WHITMAN REQUARDT & ASSOCIATES
RICHMOND, VA
STRUCTURAL ENGINEER

Scale: ½ " = 1'-0" unless otherwise noted.

© 2022, Commonwealth of Virginia

No.	Description	Date
	Revisions	

COMMONWEALTH OF VIRGINIA
DEPARTMENT OF TRANSPORTATION

STRUCTURE AND BRIDGE DIVISION

RW WALL SECTIONS AND NOTES

Designed: JMC	Date	Plan No.	Sheet No.
Drawn: JMC	July 2022	257-38A	115 of 125
Checked: AS			

STATE	FEDERAL AID		STATE		SHEET NO.
	ROUTE	PROJECT	ROUTE	PROJECT	
VA.	—		95	0095-076-299, B688	116

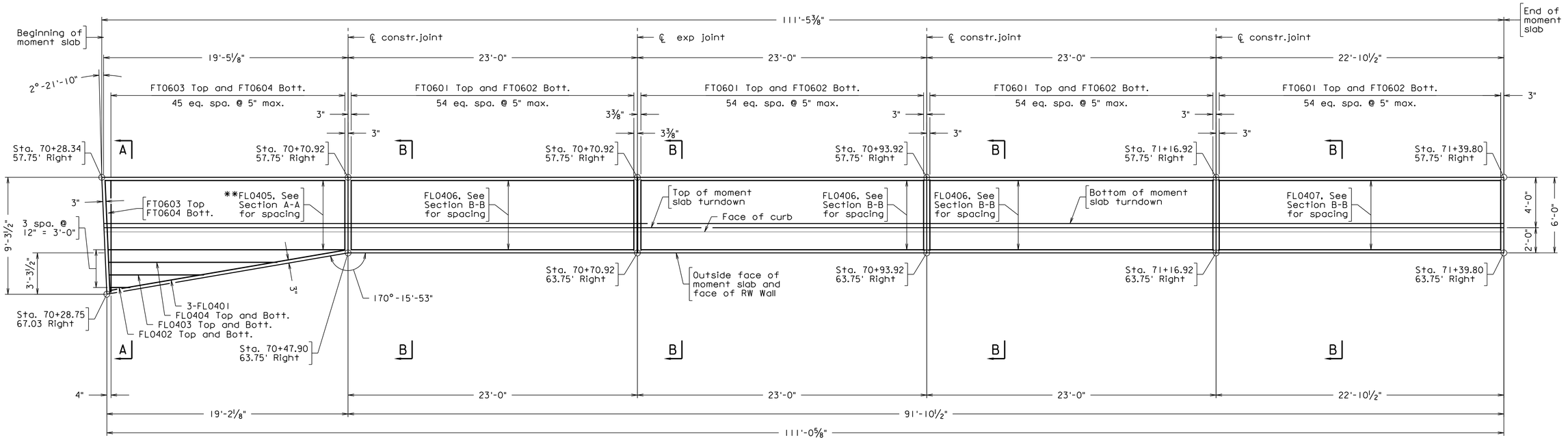

MOMENT SLAB PLAN

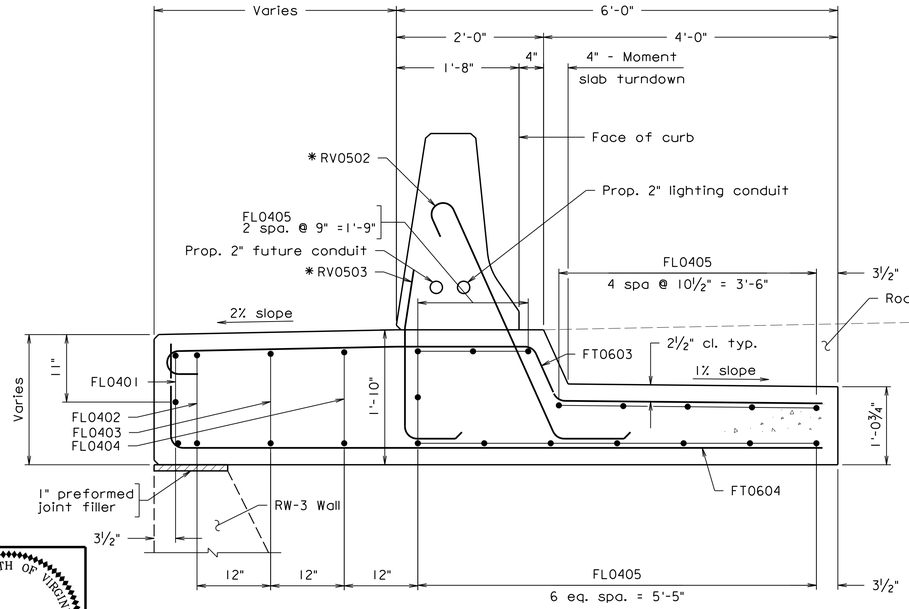

MOMENT SLAB SECTION A-A

Scale: 1" = 1'-0"

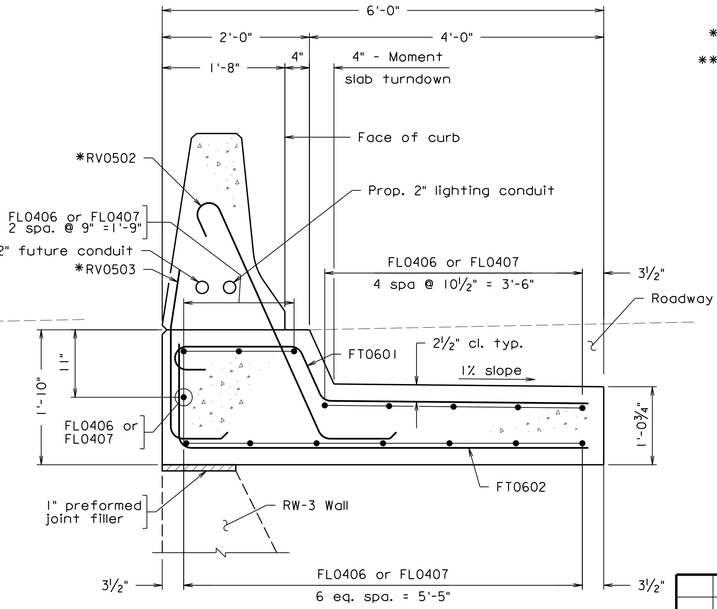

MOMENT SLAB SECTION B-B

Scale: 1" = 1'-0"

Notes:

*See Cast-in-place concrete parapet (BPB-3A) details on sheet 82.

**Field cut FL0405 bars as needed to fit length of slab

Concrete in moment slabs shall be Low Shrinkage Class A4 Modified.

Class II Corrosion Resistant Reinforcing (CRR) steel shall be used in moment slab.

Expansion joint shall be in accordance with Section 404 of the Specifications. Joint filler shall be preformed joint filler.

For additional notes, see sheet 114.

Scale: ¼ " = 1'-0" unless otherwise noted.

© 2022, Commonwealth of Virginia

COMMONWEALTH OF VIRGINIA
JEREMY SCHLUSSEL
Lic. No. 033974
PROFESSIONAL ENGINEER

Jeremy Schlussel
2022.07.08 19:08:50 -04'00'

WHITMAN REQUARDT & ASSOCIATES
RICHMOND, VA
STRUCTURAL ENGINEER

No.	Description	Date
	Revisions	

COMMONWEALTH OF VIRGINIA
DEPARTMENT OF TRANSPORTATION

STRUCTURE AND BRIDGE DIVISION

MOMENT SLAB PLAN AND TYPICAL SECTIONS

Designed: JMC	Date	Plan No.	Sheet No.
Drawn: JMC	July 2022	257-38A	116 of 125
Checked: AR			

257-38A_116.dgn

STATE	FEDERAL AID		STATE		SHEET NO.
	ROUTE	PROJECT	ROUTE	PROJECT	
VA.	—		95	0095-076-299, B688	117

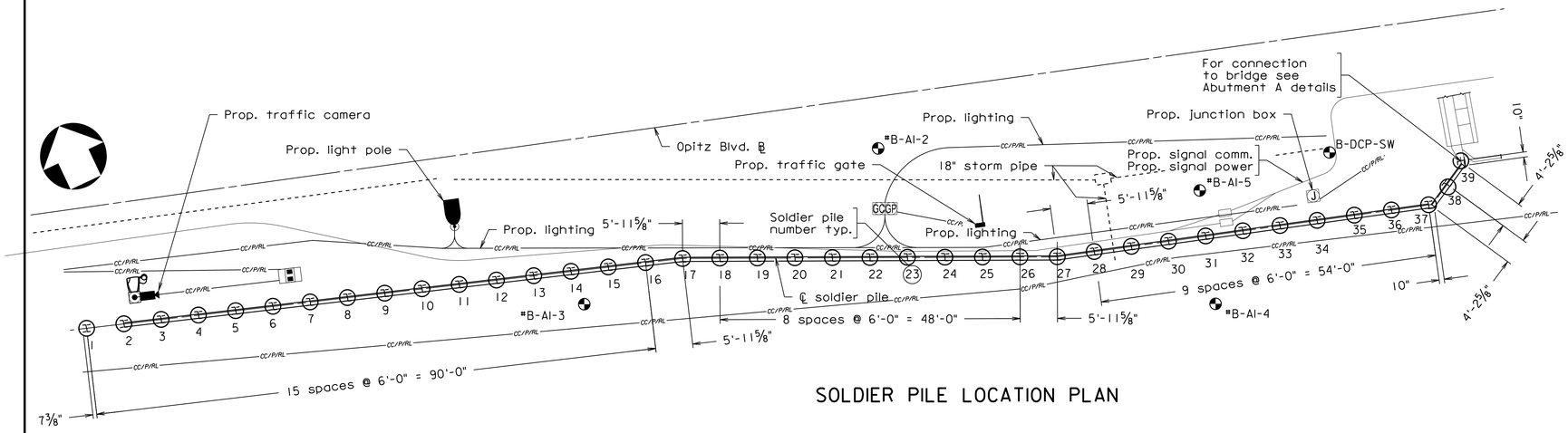

SOLDIER PILE LOCATION PLAN

SOLDIER PILE LOCATION DATA

Soldier pile no.	Opitz Blvd. ℄ Station	Offset	Min. tip elev.
1	63+16.80	62.38' Rt.	178
2	63+22.80	62.52' Rt.	178
3	63+28.80	62.65' Rt.	178
4	63+34.80	62.78' Rt.	178
5	63+40.80	62.92' Rt.	178
6	63+46.79	63.05' Rt.	178
7	63+52.79	63.18' Rt.	178
8	63+58.79	63.32' Rt.	178
9	63+64.79	63.45' Rt.	178
10	63+70.79	63.58' Rt.	178
11	63+76.79	63.72' Rt.	178
12	63+82.78	63.85' Rt.	178
13	63+88.78	63.98' Rt.	178
14	63+94.78	64.12' Rt.	178
15	64+00.78	64.25' Rt.	178
16	64+06.78	64.38' Rt.	178
17	64+12.74	64.52' Rt.	178
18	64+18.65	65.32' Rt.	178
19	64+24.59	66.13' Rt.	178
20	64+30.54	66.93' Rt.	178
21	64+36.48	67.74' Rt.	178
22	64+42.43	68.55' Rt.	178
23	64+48.37	69.36' Rt.	178
24	64+54.32	70.16' Rt.	178
25	64+60.26	70.97' Rt.	178
26	64+66.21	71.78' Rt.	178
27	64+72.12	72.58' Rt.	178
28	64+78.09	72.58' Rt.	178
29	64+84.09	72.58' Rt.	178
30	64+90.09	72.59' Rt.	178
31	64+96.09	72.59' Rt.	178
32	65+02.09	72.59' Rt.	178
33	65+08.09	72.59' Rt.	178
34	65+14.09	72.59' Rt.	178
35	65+20.09	72.59' Rt.	178
36	65+26.09	72.59' Rt.	178
37	65+32.09	72.59' Rt.	178
38	65+35.45	69.77' Rt.	178
39	65+38.17	66.31' Rt.	178

Minimum tip elevation shall include a minimum embedment of 24 feet with 10 feet into decomposed rock stratum.

Stations and offsets taken to center of pile.

257-38A_117.dgn

COMMONWEALTH OF VIRGINIA
JEFFREY S. BASFORD
Lic. No. 043143
PROFESSIONAL ENGINEER

Jeffrey S Basford
2022.07.08 18:08:42 -04'00'

WHITMAN REQUARDT & ASSOCIATES
RICHMOND, VA
GEOTECHNICAL ENGINEER

COMMONWEALTH OF VIRGINIA
JEREMY SCHLUSSEL
Lic. No. 033974
PROFESSIONAL ENGINEER

Jeremy Schlussel
2022.07.08 19:07:20 -04'00'

WHITMAN REQUARDT & ASSOCIATES
RICHMOND, VA
STRUCTURAL ENGINEER

SUGGESTED SEQUENCE OF CONSTRICTION AND GENERAL REQUIREMENTS:

1. Clear and grub the area for the wall construction.

2. Place all erosion and sediment perimeter controls in accordance with the approved erosion and sediment control plan. These controls shall remain inplace and be continuously maintained during all construction.

3. Grade a bench along the proposed wall alignment wide enough to accommodate the drilling equipment required to install the drilled shafts and soldier piles for the retaining wall.

4. Once the area has been prepared for the drilling of the drilled shafts the Contractor may proceed with the drilling operation.

5. The drilled shafts shall be drilled as indicated in the plans. The Contractor shall advance the drilled shafts into rock and shall have sufficient casing on hand to case the holes as necessary to facilitate the work. Casing shall be removed during the pouring operation.

6. Once the prebored hole is drilled, the Contractor shall place the pile inside the prebored hole and prepare the hole for pouring of the concrete. Particular attention must be given to the placement of the pile to insure that the alignment of the proposed wall is maintained.

7. The concrete shall be placed in one continuos operation in accordance with the plans and Specifications. Concrete shall be placed to the bottom of future concrete lagging panels and flowable backfill above that elevation.

8. Once the prebored hole and soldier pile is placed, the Contractor shall exercise extreme care so as not to damage the pile or prebored hole. Any damages shall be repaired to the satisfaction of the Engineer at the sole expense of the Contractor.

9. The flowable fill placed around piles shall be chipped out as needed to accommodate the lagging panels and wood lagging boards.

10. Once the permanent concrete lagging panels are in place the Contractor shall place the #68 stone backfill between the wood lagging and the permanent concrete lagging panels. This shall be done at the end of each working day. The stone backfill shall be protected at the surface by a geotextile fabric to prevent mud and silt from fouling the stone.

11. The top coping and pile encasement shall be placed once the lagging has been placed.

12. Once the permanent concrete lagging panels have been placed the Contractor may final grade the areas behind the top of the wall. Extreme care shall be taken so as not to damage the concrete wall construction.

Notes:

For additional requirements, refer to the Special Provision titled "Special Provision for Soldier Pile Retaining Walls dated December 20, 2018."

All structural steel shall be ASTM A709 Grade 50 and shall be galvanized in accordance with Section 233 of the Specifications.

All concrete shall be Class A4 except for concrete backfill around piles shall be Class A3.

All reinforcing steel in concrete coping shall be Corrosion Resistant Reinforcing Steel, Class I.

All reinforcing steel shall be deformed and shall conform to ASTM A615, Grade 60 except for steels noted as Corrosion Resistant Reinforcing (CRR) which shall conform to Section 223 of the Specifications. All reinforcing bar dimensions on the detailed drawings are to centers of bars except where otherwise noted and are subject to fabrication and construction tolerances.

CRR steels shall conform to one or more of the three Classes listed in Section 223 of the Specifications. The Class(es) of CRR steel(s) required on this project is/are noted on plan sheets and in the reinforcing steel schedule. CRR Steel, Class I may be substituted for Class II and/or Class III.

Chamfer exposed edges of concrete facing ¾" x ¾" unless otherwise noted.

For abutment details, including connection to wingwall see sheet 14.

Soldier piles shall be seated at or below the minimum tip elevation or shall be seated a minimum of ten feet into rock if rock is encountered prior to achieving the minimum tip elevation.

The backfill behind the wall shall consist of SM (USCS) or better, and compacted to VDOT standards.

Precast panels shall have temporary blocking until backfilled.

Legend:

Boring locations

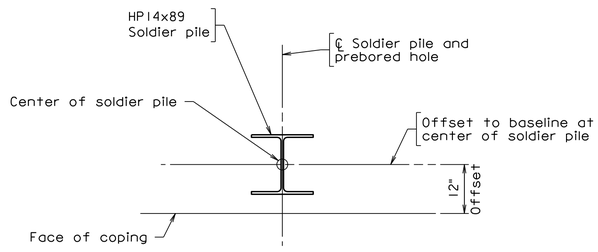

SOLDIER PILE SECTION

Scale: 1" = 1'-0"

Scale: 3/32" = 1'-0" unless otherwise noted.

© 2022, Commonwealth of Virginia

No.	Description	Date
	Revisions	

COMMONWEALTH OF VIRGINIA
DEPARTMENT OF TRANSPORTATION

STRUCTURE AND BRIDGE DIVISION

SOLDIER PILE WALL PLAN AND NOTES

Designed: MRD	Date	Plan No.	Sheet No.
Drawn: MRD	July 2022	257-38A	117 of 125
Checked: AR			

STATE	FEDERAL AID		STATE		SHEET NO.
	ROUTE	PROJECT	ROUTE	PROJECT	
VA.	—		95	0095-076-299, B688	118

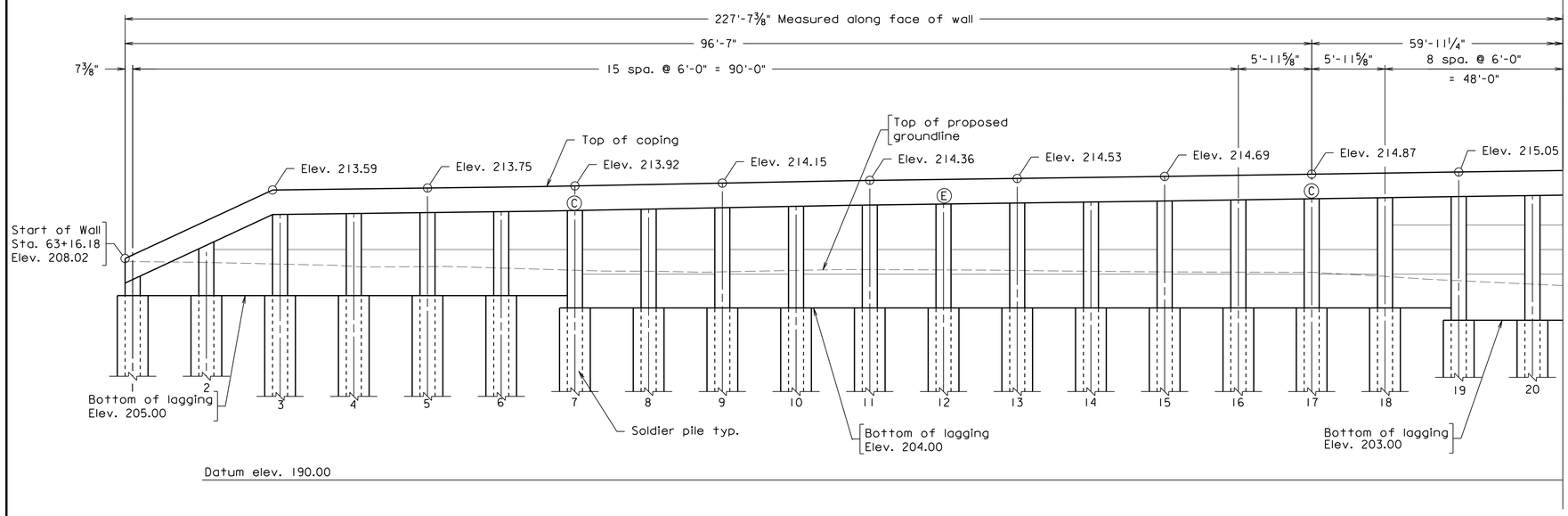

ELEVATION (FRONT FACE)

LEGEND:

Ⓔ = Expansion joint in coping
Ⓒ = Contraction joint in coping

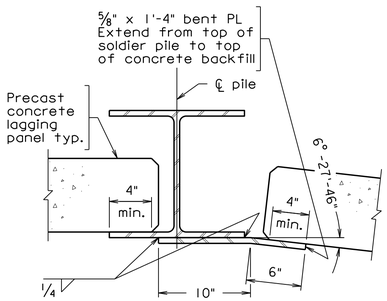

SECTION AT PILE 17
Not to scale

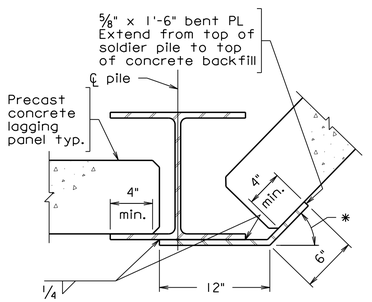

* 3°-51'-59" (Pile 27)
45°-48'-17" (Pile 37 and 39)

SECTION AT PILES 27, 37 AND 39
Pile 37 shown, Pile 17, 27 and 39 similar.
Not to scale

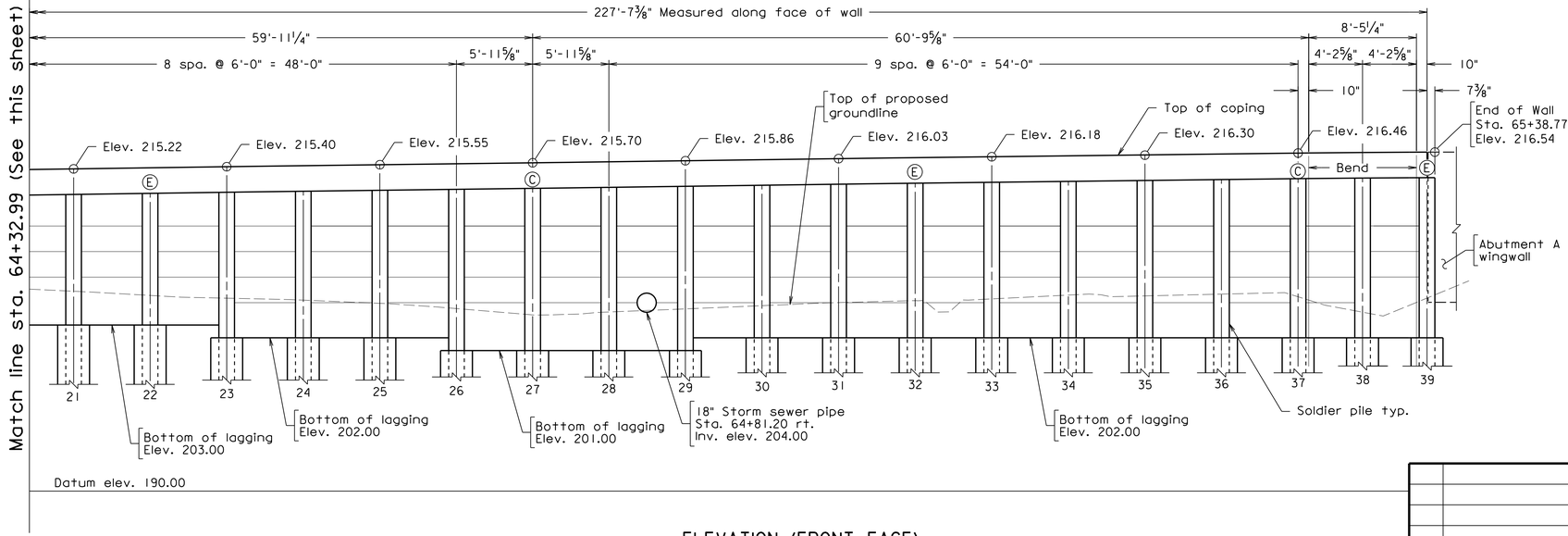

ELEVATION (FRONT FACE)

257-38A_118.dgn

COMMONWEALTH OF VIRGINIA
JEFFREY S. BASFORD
Lic. No. 043143
PROFESSIONAL ENGINEER

Jeffrey S Basford
2022.07.08 18:09:53 -04'00'

WHITMAN REQUARDT & ASSOCIATES
RICHMOND, VA
GEOTECHNICAL ENGINEER

COMMONWEALTH OF VIRGINIA
JEREMY SCHLUSSEL
Lic. No. 033974
PROFESSIONAL ENGINEER

Jeremy Schlussel
2022.07.08 19:08:00 -04'00'

WHITMAN REQUARDT & ASSOCIATES
RICHMOND, VA
STRUCTURAL ENGINEER

No.	Description	Date
	Revisions	

Scale: ⅜" = 1'-0" unless otherwise noted.

© 2022, Commonwealth of Virginia

COMMONWEALTH OF VIRGINIA
DEPARTMENT OF TRANSPORTATION

STRUCTURE AND BRIDGE DIVISION

SOLDIER PILE WALL ELEVATION

Designed: MRD	Date	Plan No.	Sheet No.
Drawn: MRD	July 2022	257-38A	118 of 125
Checked: AC			

STATE	FEDERAL AID		STATE		SHEET NO.
	ROUTE	PROJECT	ROUTE	PROJECT	
VA.	—		95	0095-076-299, B688	119

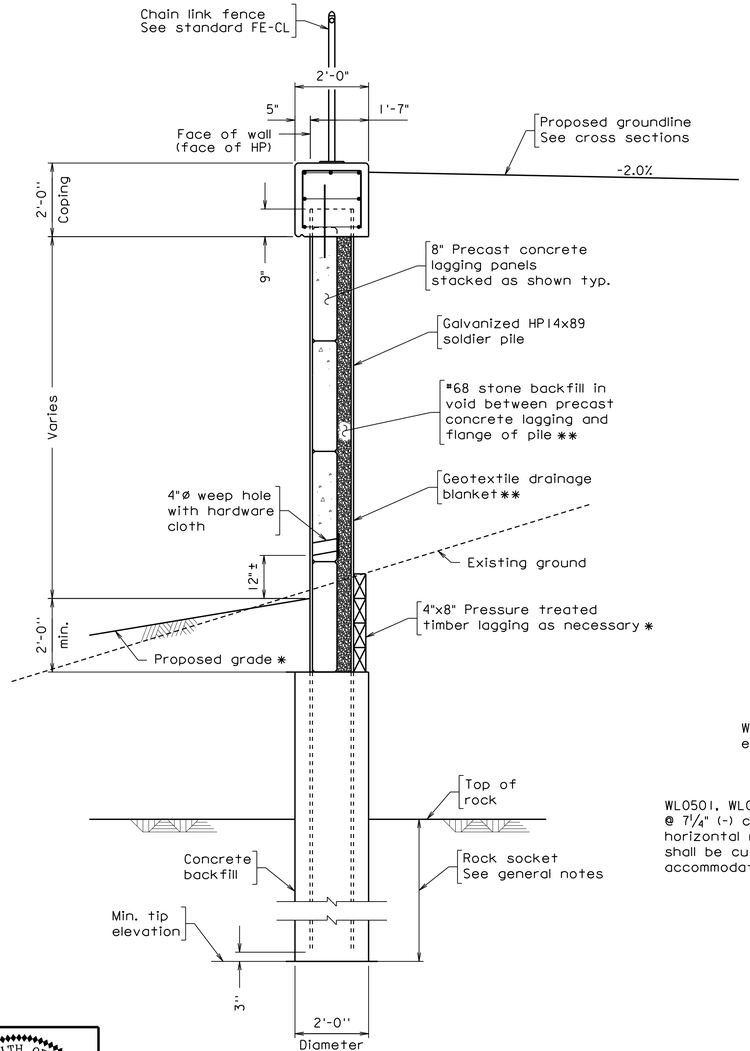

TYPICAL WALL SECTION

Scale: ½" = 1'-0"

* Timber lagging shall be used only as necessary.

** Geocomposite wall drain may be used in lieu of #68 stone backfill and geotextile drainage blanket. Geocomposite wall drain shall be in accordance with Section 245 of the Specifications.

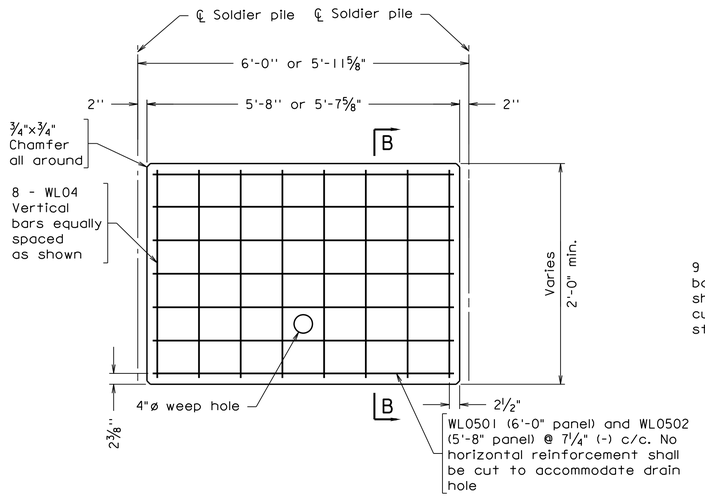

PRECAST CONCRETE LAGGING PANEL DETAILS BETWEEN PILES 1 THRU 37

Scale: ¾" = 1'-0"

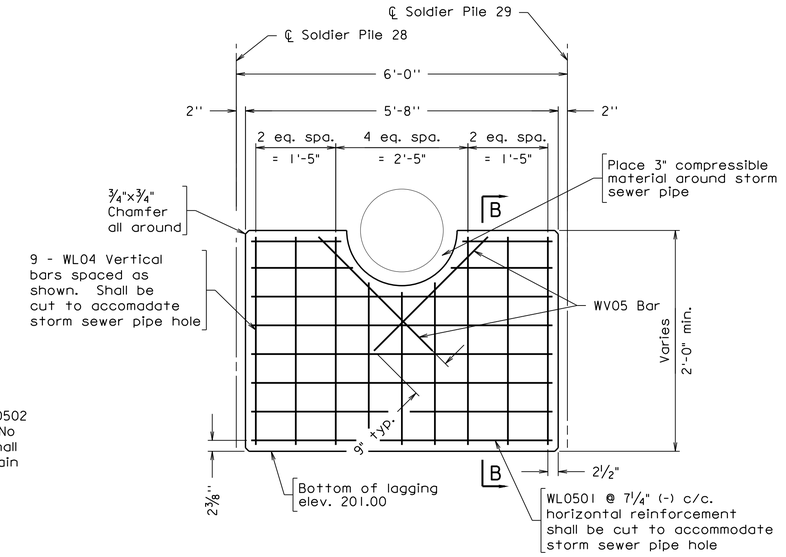

WALL PANEL AT STORM SEWER PIPE

Detail shown for bottom panel at storm sewer, top panel similar opposite hand.

Scale: ¾" = 1'-0"

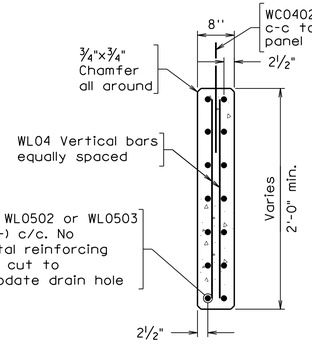

SECTION B-B

Scale: ¾" = 1'-0"

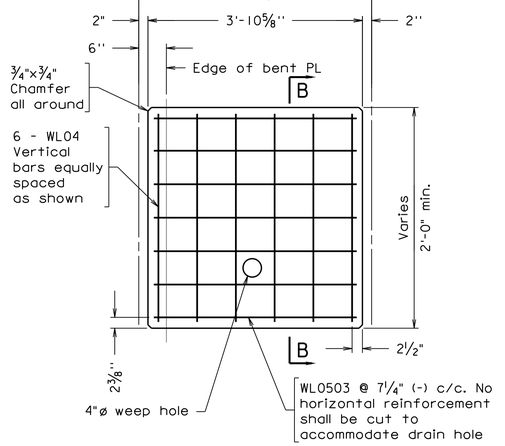

PRECAST CONCRETE LAGGING PANEL DETAILS BETWEEN PILES 37 THRU 39

Panel between Piles 37 and 38 shown. Panel between Piles 38 and 39 similar, oppostie hand.

Scale: ¾" = 1'-0"

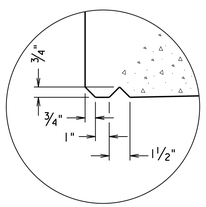

DRIP DETAIL

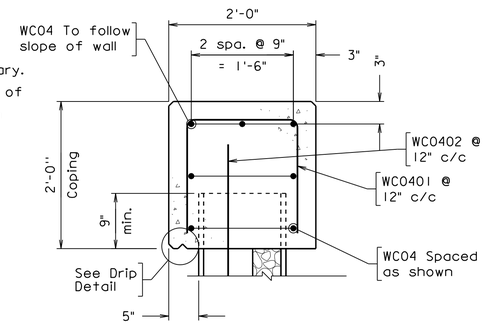

COPING REINFORCEMENT DETAIL

Scale: 1" = 1'-0"

REINFORCING STEEL SCHEDULE

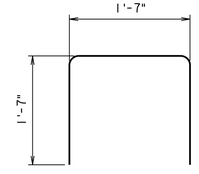

WC0401

Mark	No.	Size	Pin ø	Length	Location
WC0401		#4	2"	4'-6⅞"	Coping
WC0402		#4	—	2'-0"	Coping/lagging
WC04		#4	—		Coping
WL04		#4	—		Lagging
WL0501		#5	—	5'-3½"	Lagging
WL0502		#5	—	5'-3⅛"	Lagging
WL0503		#5	—	3'-6⅛"	Lagging
WV05		#5	—		Lagging

Contractor shall determine all reinforcing details necessary for installation.

COMMONWEALTH OF VIRGINIA
JEFFREY S. BASFORD
Lic. No. 043143
PROFESSIONAL ENGINEER

Jeffrey S Basford
2022.07.08 18:11:46 -04'00'

WHITMAN REQUARDT & ASSOCIATES
RICHMOND, VA
GEOTECHNICAL ENGINEER

COMMONWEALTH OF VIRGINIA
JEREMY SCHLUSSEL
Lic. No. 033974
PROFESSIONAL ENGINEER

Jeremy Schlussel
2022.07.08 19:07:40 -04'00'

WHITMAN REQUARDT & ASSOCIATES
RICHMOND, VA
STRUCTURAL ENGINEER

No.	Description	Date
	Revisions	

COMMONWEALTH OF VIRGINIA
DEPARTMENT OF TRANSPORTATION

STRUCTURE AND BRIDGE DIVISION

SOLDIER PILE WALL TYPICAL SECTION AND DETAILS

Designed: MRD	Date	Plan No.	Sheet No.
Drawn: MRD	July 2022	257-38A	119 of 125
Checked: AF			

© 2022, Commonwealth of Virginia

257-38A_119.dgn

STATE	FEDERAL AID		STATE		SHEET NO.
	ROUTE	PROJECT	ROUTE	PROJECT	
VA.	—		95	0095-076-299, B688	120

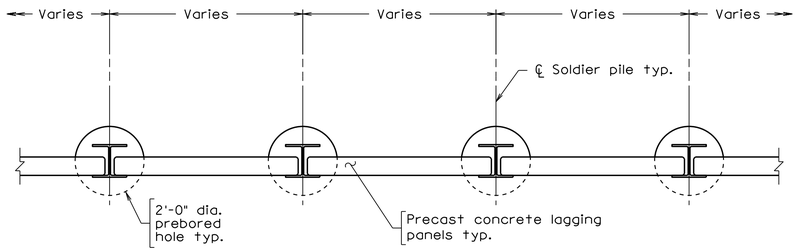

PART PLAN - LAGGING AND SOLDIER PILES

Scale: 3/8" = 1'-0"

Notes:

Bond breaker shall be an approved form - coating material that will prevent adherence of concrete. Material that will adhere to or discolor concrete shall not be used. Surfaces shall be treated with bond breaker immediately before concrete placement.

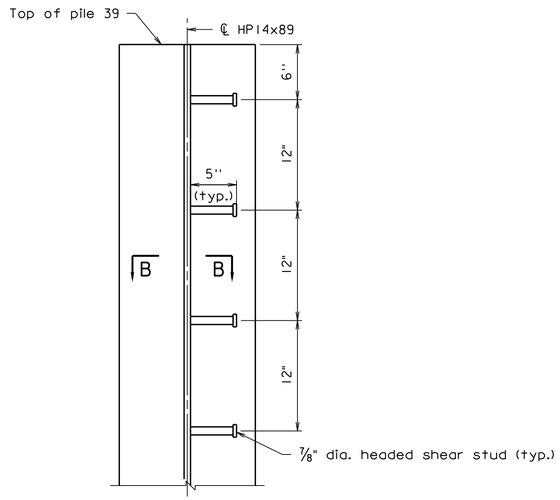

SHEAR STUD DETAILS - PILE 39

Scale: 1 1/2" = 1'-0"

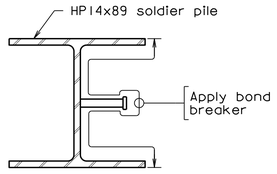

SECTION B-B

Scale: 1 1/2" = 1'-0"

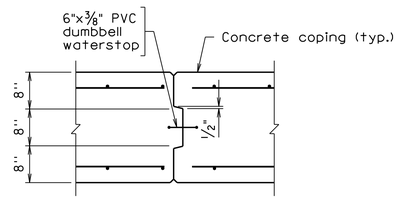

CONTRACTION

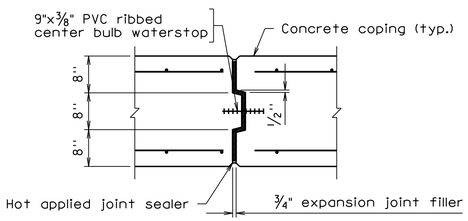

EXPANSION

COPING JOINT DETAILS

Scale: 3/4" = 1'-0"

257-38A_120.dgn

COMMONWEALTH OF VIRGINIA
JEREMY SCHLUSSEL
Lic. No. 033974
PROFESSIONAL ENGINEER

Jeremy Schlussel
2022.07.08 19:05:40 -04'00'

WHITMAN REQUARDT & ASSOCIATES
RICHMOND, VA
STRUCTURAL ENGINEER

© 2022, Commonwealth of Virginia

No.	Description	Date
	Revisions	

COMMONWEALTH OF VIRGINIA
DEPARTMENT OF TRANSPORTATION

STRUCTURE AND BRIDGE DIVISION

SOLDIER PILE WALL AND LAGGING DETAILS

Designed: MRD	Date	Plan No.	Sheet No.
Drawn: MRD	July 2022	257-38A	120 of 125
Checked: AF			

STATE	FEDERAL AID		STATE		SHEET NO.
	ROUTE	PROJECT	ROUTE	PROJECT	
VA.	—		95	0095-076-299, B688	120a

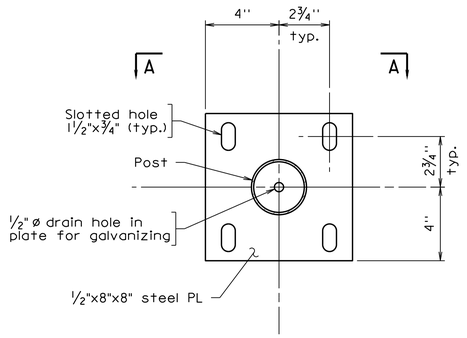

STEEL BASE PLATE DETAIL

Scale: 3" = 1'-0"

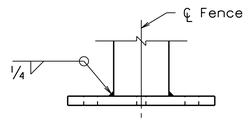

SECTION A-A

Scale: 3" = 1'-0"

Notes:

All structural steel shall be ASTM A709 Grade 50.

Posts shall be equally spaced, not to exceed 10'-0".

Details shown are designed for the use of Simpson Strong-Tie acrylic adhesive and A193 GR B7 Threaded Rod Anchors. The use of alternate products may be allowed provided they conform to VDOT approved materials list and are approved by the Engineer.

Contractor to size length of anchor rods to ensure minimum stick-through for nut installation, and adjustments for grade.

Contractor to avoid hitting coping rebar during anchor bolt installation.

Contractor may propose alternate attachment methods for the fence posts for review. Alternates shall be designed for appropriate loads and bear the seal of a professional engineer licensed in the Commonwealth of Virginia.

Chain link mesh to be placed on the inside face of fence posts.

Chain link mesh, plates, posts, rails and other associated hardware shall be black vinyl coated steel.

For details not shown herein, refer to VDOT standard FE-CL.

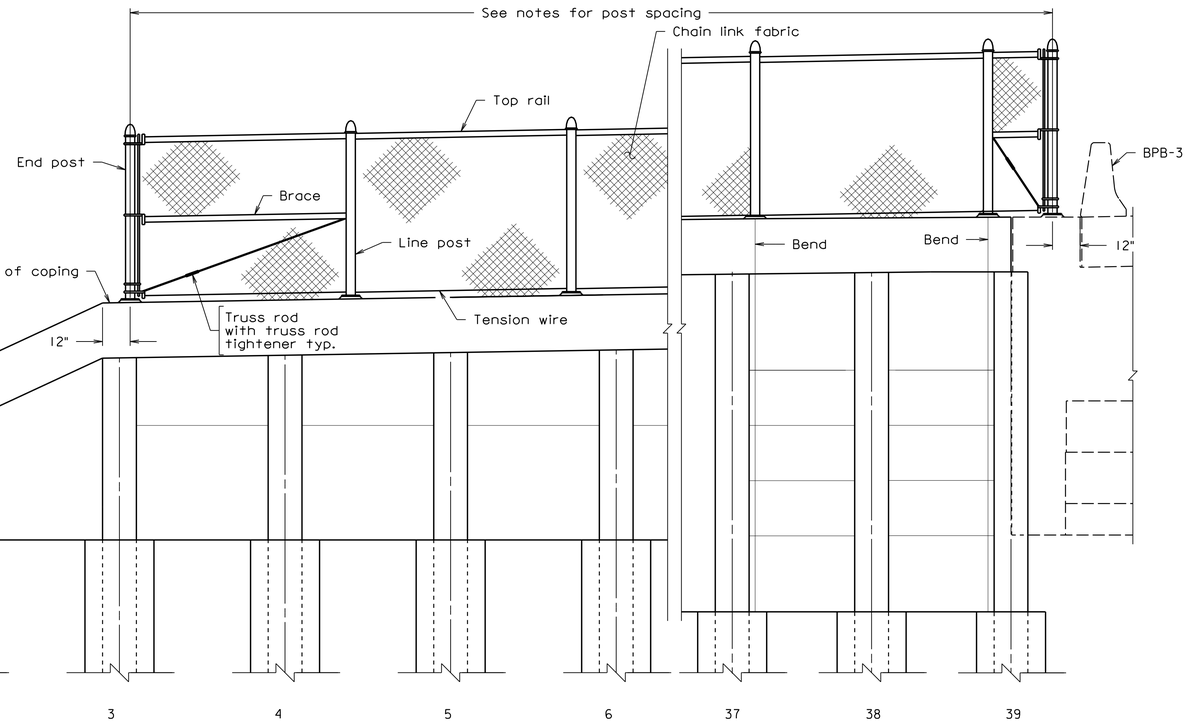

PART ELEVATION

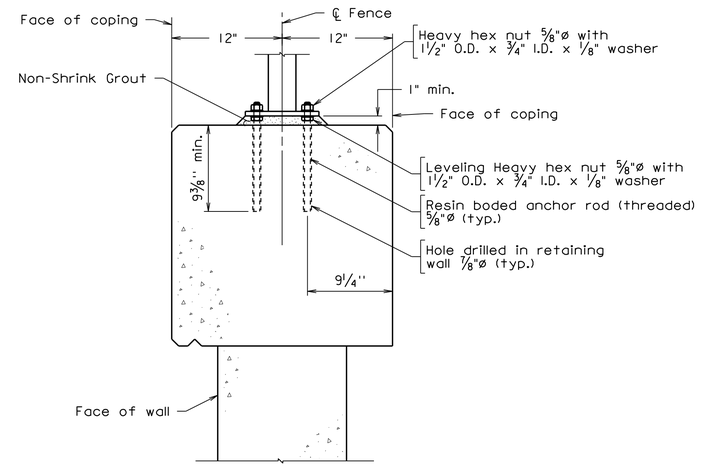

FENCE CONNECTION DETAIL

Scale: 1½" = 1'-0"

257-38A_120a.dgn

COMMONWEALTH OF VIRGINIA
JEREMY SCHLUSSEL
Lic. No. 033974
PROFESSIONAL ENGINEER

Jeremy Schlussel
2022.07.08 19:06:02 -04'00'

WHITMAN REQUARDT & ASSOCIATES
RICHMOND, VA
STRUCTURAL ENGINEER

Scale: 3/8 " = 1'-0" unless otherwise noted.

© 2022. Commonwealth of Virginia

No.	Description	Date
	Revisions	

COMMONWEALTH OF VIRGINIA
DEPARTMENT OF TRANSPORTATION

STRUCTURE AND BRIDGE DIVISION

SOLDIER PILE WALL FENCE DETAILS

Designed: MRD	Date	Plan No.	Sheet No.
Drawn: MRD	July 2022	257-38A	120aof 125
Checked: AK			

STATE	FEDERAL AID		STATE		SHEET NO.
	ROUTE	PROJECT	ROUTE	PROJECT	
VA.	—		95	0095-076-299, B688	121

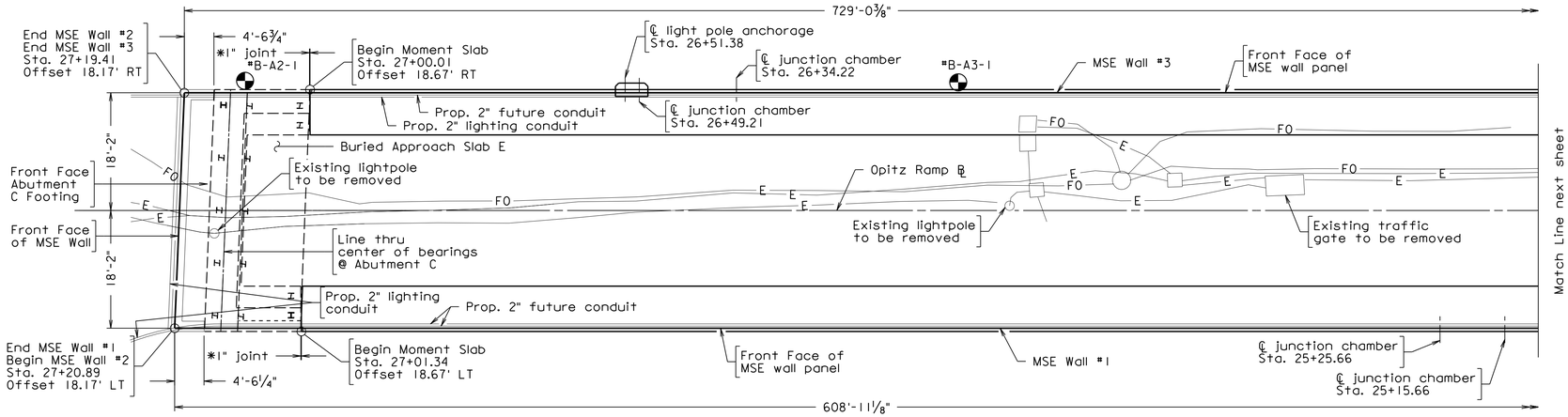

Legend:

Denotes boring location.

Note:

* Moment slab shall maintain a minimum 1" joint between the BPB-3A and the buried approach slab. The moment slab may be angled to match angle of approach slab as necessary.

All existing fiber optic and electric conduit shown to be abandoned.

MSE WALL LAYOUT - ABUTMENT AND APPROACH RAMP

ESTIMATED WALL SETTLEMENT TABLE	
Monitoring Location (station)	Estimated intermediate settlement at the end of wall construction (inches)
27+00	0.3
26+00	0.6
24+50	0.35
23+50	1.85
22+50	0.53

MSE WALL BEARING RESISTANCE DATA TABLE			
Wall No.	Support Location	SERVICE Applied Base Pressure (Settlement ≤ 2 ") (ksf)	STRENGTH Factored Bearing Resistance (ksf)
1,2,3	Sta. 24+50 to Abut. C	4.1	6.5
1,3	Sta. 22+50 to Sta. 24+50	2.6	4.2
1,3	Beg. of Wall to Sta. 22+50	1.5	2.5

The wall design shall be based on the lower of the values (either Service Limit or Strength Limit States) given for each Support Location in the table above. The Nominal Bearing Resistance will be verified by the engineer prior to construction of wall.

Notes:

The minimum design life of MSE wall shall be 100-year.

The anticipated MSE wall total settlement is 2 inches and differential settlement is 1 inch.

For bearing resistance requirements, see the MSE Wall Bearing Resistance Data Table.

For settlement requirements, see the Estimated Wall Settlement Table.

Vertical slip joints shall be placed in MSE Wall #1 and #3 at Stations 23+00 and 24+00.

Prior to wall construction, the foundation shall be compacted with a smooth wheel vibratory roller weighting 10 tons minimum. The drums of the roller should be ballasted, and each pass of the roller should overlap one half the width of the previous pass. The roller shall make at least ten passes over the proposed wall foundation zone. No density test will be required. Any foundation soils found to be unsuitable and/or unstable shall be removed and replaced with select material Type I minimum CBR of 30. Compact the foundation area according to the VDOT Specifications.

Minimum panel design thickness is 5.5 inches.

MSE wall panels shall be cruciform 5'x5' panel.

Concrete in moment slabs and parapet/railing shall be Low Shrinkage Class A4 Modified.

Class II Corrosion Resistant Reinforcing (CRR) steel shall be used in moment slab and parapet/railing.

Class I CRR steel shall be used in copings and MSE wall panels.

An impervious membrane shall be placed below the pavement and just above the first row of reinforcement. The membrane shall be sloped to drain away from the facing to an intercepting longitudinal drain outlet beyond the reinforced zone. Membrane shall be incidental to Retaining Structure MSE Wall.

A Geotextile shall be used as a separator between the Mechanically stabilized earth mass, Retained fill, and the Subbase.

The selected wall supplier shall submit a detailed design and shop drawings for approval.

Retained fill shall be #57 stone.

Wall shall be designed to resist forces from retained fill with the following parameters:
- Soil Friction angle ( ) = 34
- Unit Weight = 105 lb/cf
- Traffic Surcharge = 250 lb/sf
- Traffic Impact = 500 lb/ft
- Ka = 0.283

Provide drainage details such as perforated pipe underdrain and/or drainage blanket based upon field conditions.

All panel types and other related elements shall be detailed on shop drawings.

MSE wall fabricator shall adjust beginning of MSE wall and may consider using an RW wall and/or MB-7 barrier as necessary and shall be incidental to Retaining Structure MSE Wall.

The minimum required soil reinforcement shall be 8 feet or 70 percent of the wall height, whichever is greater, except for MSE Wall #2 which shall be 8 feet or 80 percent of the wall height, whichever is greater.

MSE walls shall be in accordance with VDOT Special Provision for Mechanically Stabilized Earth Walls (Concrete Panel Facing).

257-38A_121.dgn

COMMONWEALTH OF VIRGINIA
JEFFREY S. BASFORD
Lic. No. 043143
PROFESSIONAL ENGINEER

Jeffrey S Basford
2022.07.08 19:31:16 -04'00'

WHITMAN REQUARDT & ASSOCIATES
RICHMOND, VA
GEOTECHNICAL ENGINEER

COMMONWEALTH OF VIRGINIA
JEREMY SCHLUSSEL
Lic. No. 033974
PROFESSIONAL ENGINEER

Jeremy Schlussel
2022.07.08 19:41:14 -04'00'

WHITMAN REQUARDT & ASSOCIATES
RICHMOND, VA
STRUCTURAL ENGINEER

Scale: 3/32 " = 1'-0" unless otherwise noted.

© 2022. Commonwealth of Virginia

No.	Description	Date
	Revisions	

COMMONWEALTH OF VIRGINIA
DEPARTMENT OF TRANSPORTATION

STRUCTURE AND BRIDGE DIVISION

MSE WALL LAYOUT
1 OF 2

Designed: MRD	Date	Plan No.	Sheet No.
Drawn: MRD	July 2022	257-38A	121 of 125
Checked: AS			

STATE	FEDERAL AID		STATE		SHEET NO.
	ROUTE	PROJECT	ROUTE	PROJECT	
VA.	—		95	0095-076-299, B688	122

Notes:

All existing fiber optic and electric conduit shown to be abandoned.

For additional information of drainage structures see roadway plans.

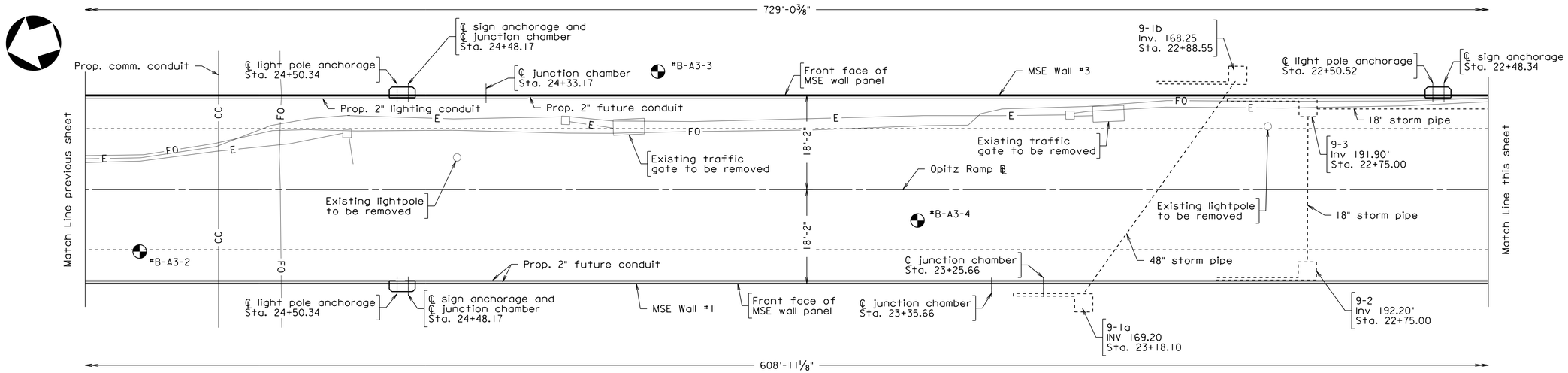

MSE WALL LAYOUT - ABUTMENT AND APPROACH RAMP

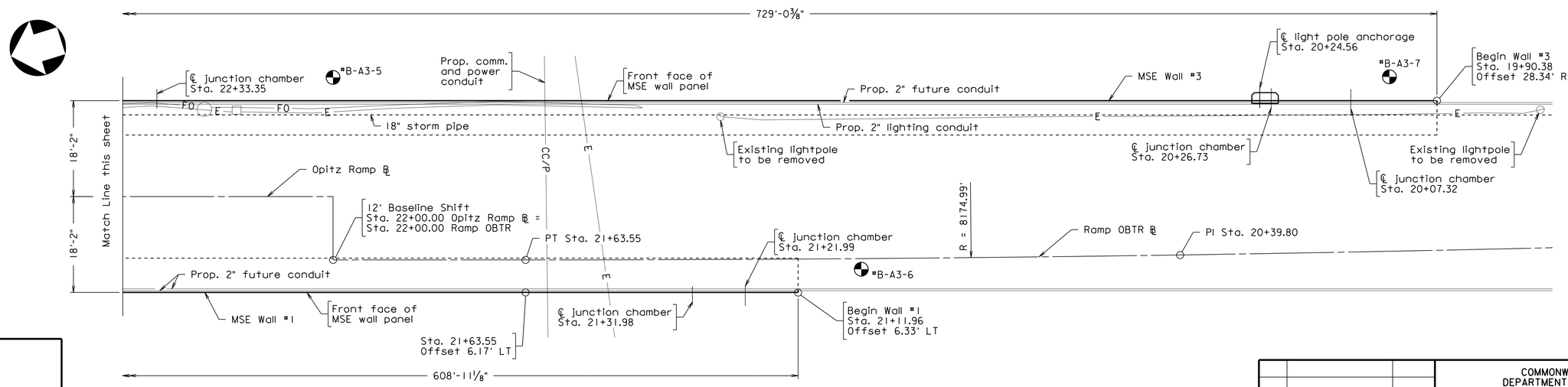

MSE WALL LAYOUT - ABUTMENT AND APPROACH RAMP

257-38A_I22.dgn

WHITMAN REQUARDT & ASSOCIATES
RICHMOND, VA
STRUCTURAL ENGINEER

Scale: 3/32 " = 1'-0" unless otherwise noted.

© 2022, Commonwealth of Virginia

No.	Description	Date
Revisions		

COMMONWEALTH OF VIRGINIA
DEPARTMENT OF TRANSPORTATION

STRUCTURE AND BRIDGE DIVISION

MSE WALL LAYOUT 2 OF 2

Designed: MRD	Date	Plan No.	Sheet No.
Drawn: MRD	July 2022	257-38A	122 of 125
Checked: AR			

STATE	FEDERAL AID		STATE		SHEET
	ROUTE	PROJECT	ROUTE	PROJECT	NO.
VA.	—		95	0095-076-299, B688	123

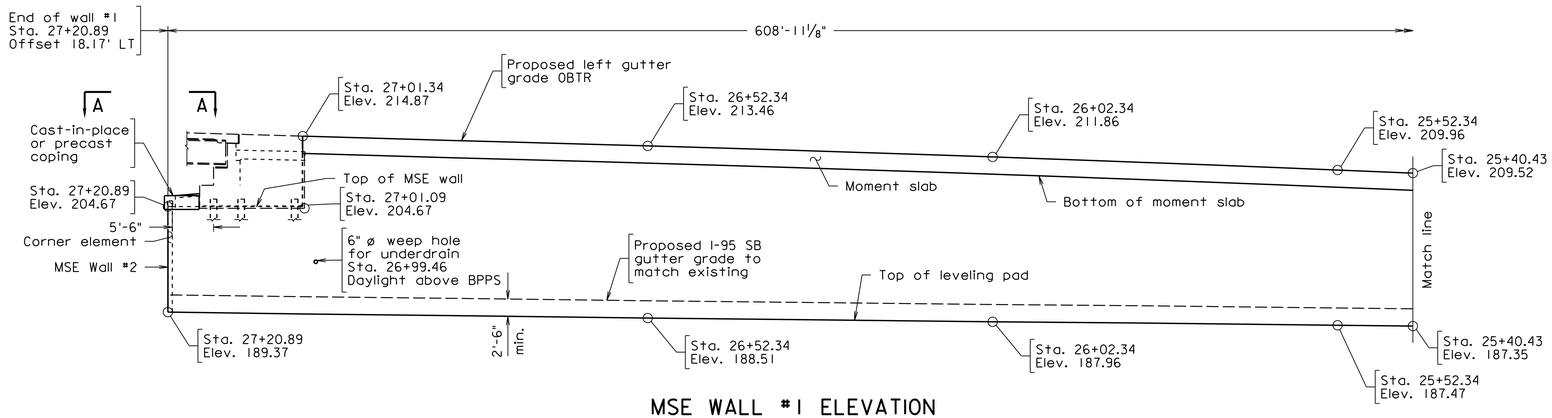

MSE WALL #1 ELEVATION

Barriers not shown for clarity

Notes:

*MSE wall fabricator shall design moment slab with drainage opening. For drainage opening throat and length dimensions see roadway plans.

MSE wall fabricator shall adjust reinforcing steel in BPB-4A to accomadate drainage throat opening.

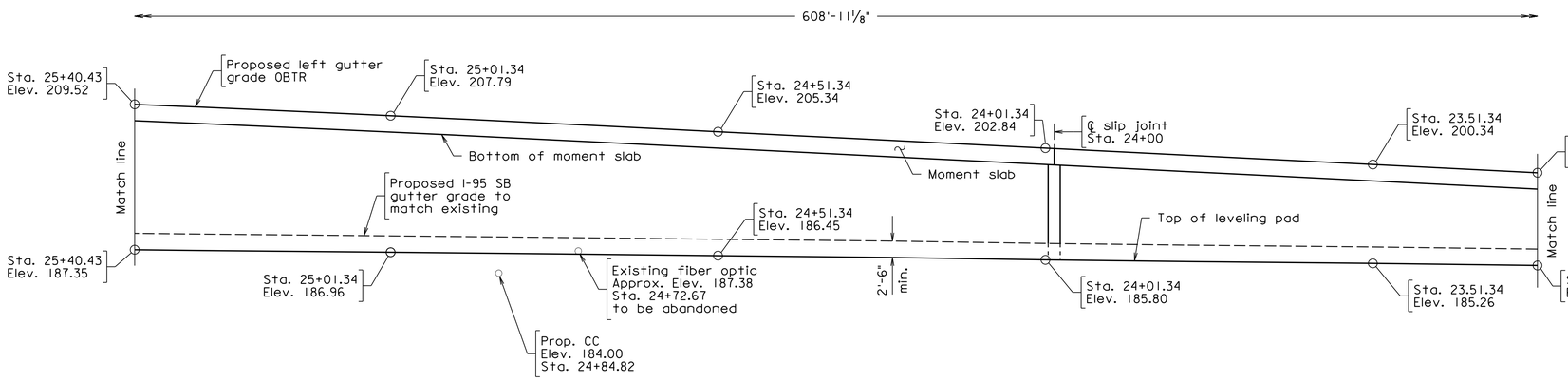

MSE WALL #1 ELEVATION

Barriers not shown for clarity

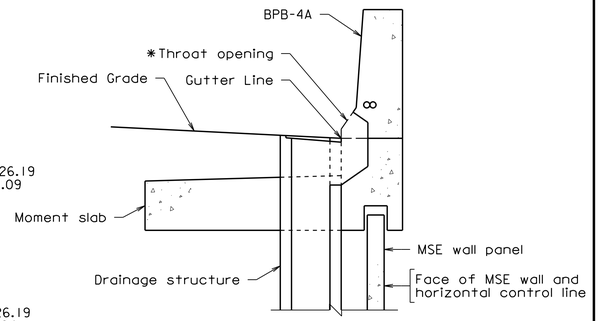

SECTION B-B

Scale: ½" = 1'-0"

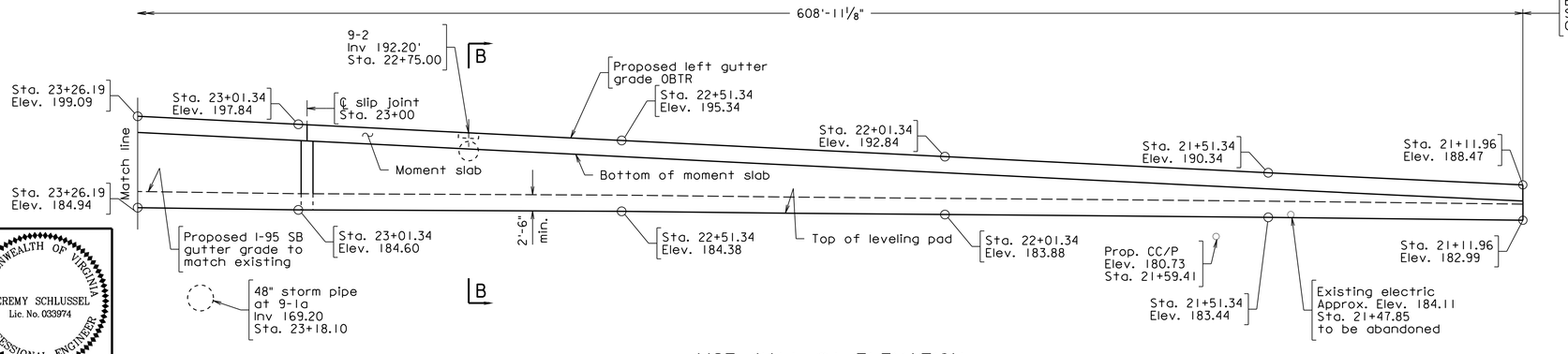

MSE WALL #1 ELEVATION

Barriers not shown for clarity

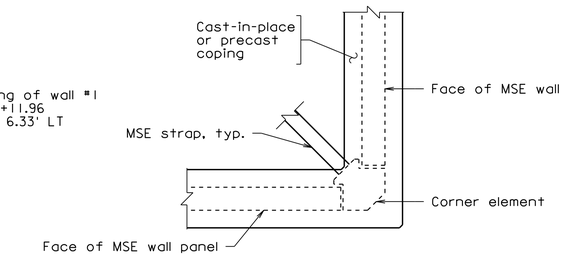

VIEW A-A

Scale: ½" = 1'-0"

COMMONWEALTH OF VIRGINIA
JEREMY SCHLUSSEL
Lic. No. 033974
PROFESSIONAL ENGINEER

Jeremy Schlussel
2022.07.08 19:40:30 -04'00'

WHITMAN REQUARDT & ASSOCIATES
RICHMOND, VA
STRUCTURAL ENGINEER

Scale: 3/32 " = 1'-0" unless otherwise noted.

© 2022, Commonwealth of Virginia

No.	Description	Date
Revisions		

COMMONWEALTH OF VIRGINIA
DEPARTMENT OF TRANSPORTATION

STRUCTURE AND BRIDGE DIVISION

MSE WALL ELEVATIONS WALL 1

Designed: MRD	Date	Plan No.	Sheet No.
Drawn: MRD	July 2022	257-38A	123 of 125
Checked: AS			

257-38A_123.dgn

STATE	FEDERAL AID		STATE		SHEET NO.
	ROUTE	PROJECT	ROUTE	PROJECT	
VA.	—		95	0095-076-299, B688	124

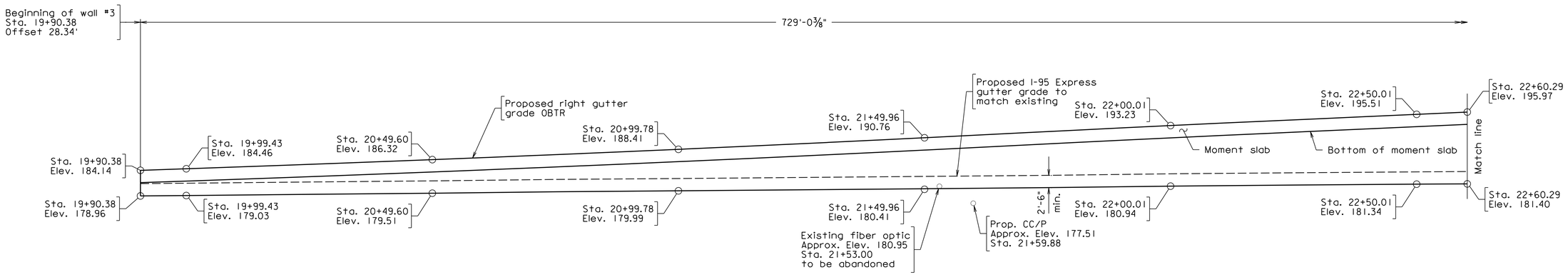

MSE WALL #3 ELEVATION
Barriers not shown for clarity

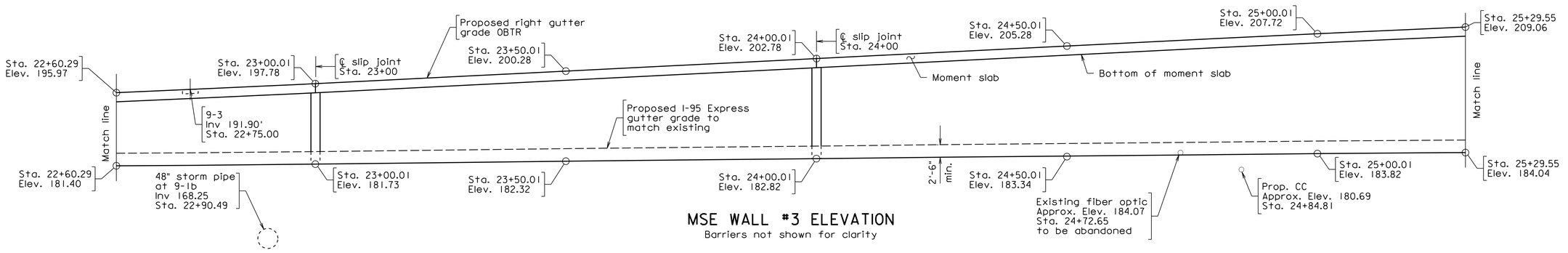

MSE WALL #3 ELEVATION
Barriers not shown for clarity

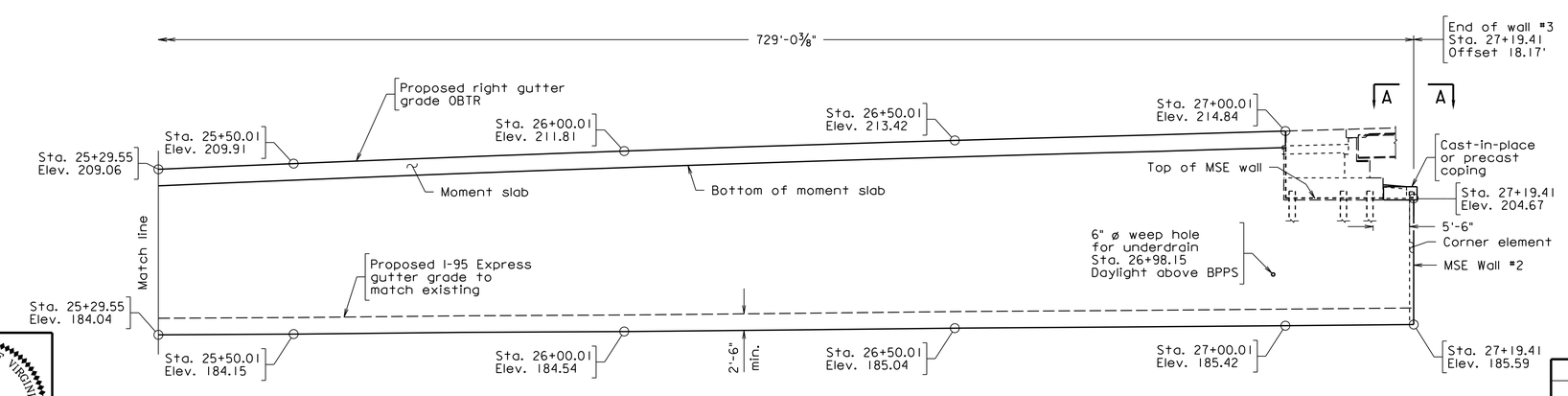

MSE WALL #3 ELEVATION
Barriers not shown for clarity

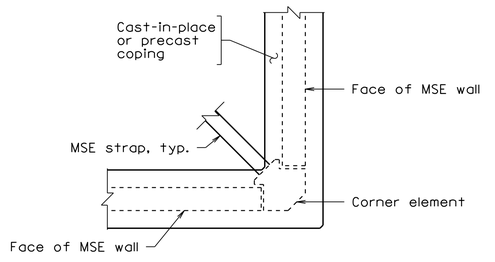

VIEW A-A
Scale: ½" = 1'-0"

257-38A_124.dgn

COMMONWEALTH OF VIRGINIA
JEREMY SCHLUSSEL
Lic. No. 033974
PROFESSIONAL ENGINEER

Jeremy Schlussel
2022.07.08 19:40:53 -04'00'

WHITMAN REQUARDT & ASSOCIATES
RICHMOND, VA
STRUCTURAL ENGINEER

Scale: 3/32 " = 1'-0" unless otherwise noted.

© 2022, Commonwealth of Virginia

No.	Description	Date
	Revisions	

COMMONWEALTH OF VIRGINIA
DEPARTMENT OF TRANSPORTATION

STRUCTURE AND BRIDGE DIVISION

MSE WALL ELEVATIONS
WALL 3

Designed: MRD	Date	Plan No.	Sheet No.
Drawn: MRD	July 2022	257-38A	124 of 125
Checked: AC			

STATE	FEDERAL AID		STATE		SHEET
	ROUTE	PROJECT	ROUTE	PROJECT	NO.
VA.	—		95	0095-076-299, B688	125

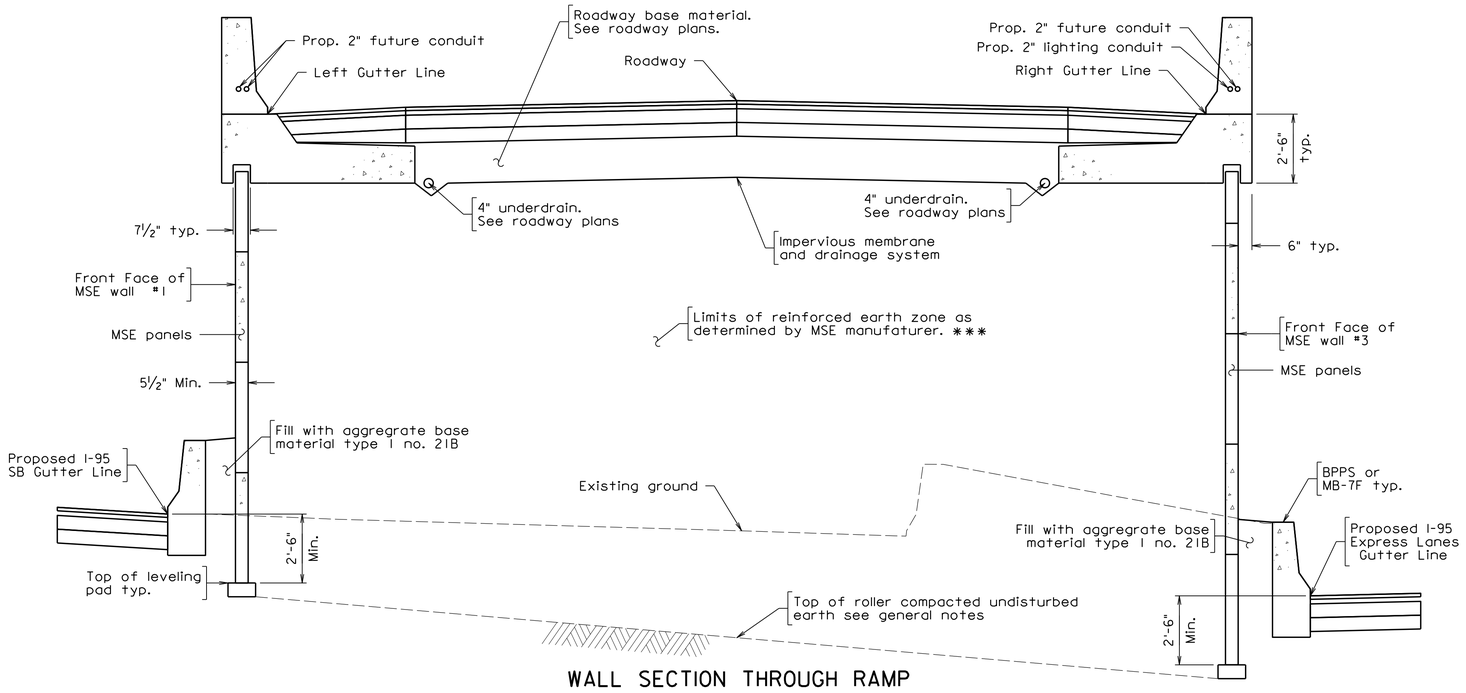

WALL SECTION THROUGH RAMP

Notes:

For BPB-4 details, see sheet 85.

** Lighting and future conduit shall pass through deck with embedded 4" diameter galvanized pipe sleeve. Sleeve shall be located between deck reinforcing steel.

Conduit attached to MSE wall coping shall be galvanized steel duct.

Conduit and junction boxes shall be attached to MSE wall coping with approved embedded galvanized concrete anchors.

*** MSE fill shall be used for full width between MSE walls where straps overlap. Near beginning of wall where the MSE wall height and straps are shorter, MSE fill shall only be in zone of straps and suitable fill may be used in-between.

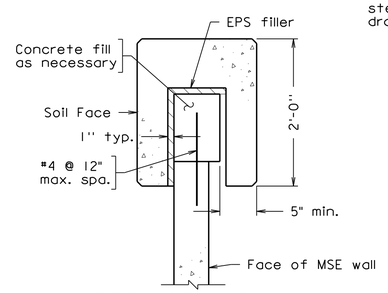

PRECAST COPING
Scale: 1" = 1'-0"

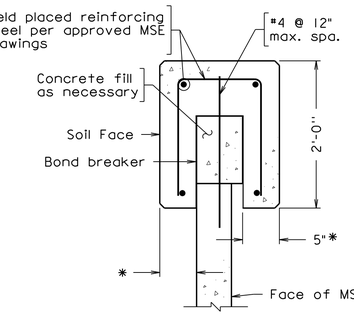

CAST-IN-PLACE COPING
Scale: 1" = 1'-0"
* Width to match adjacent precast coping.

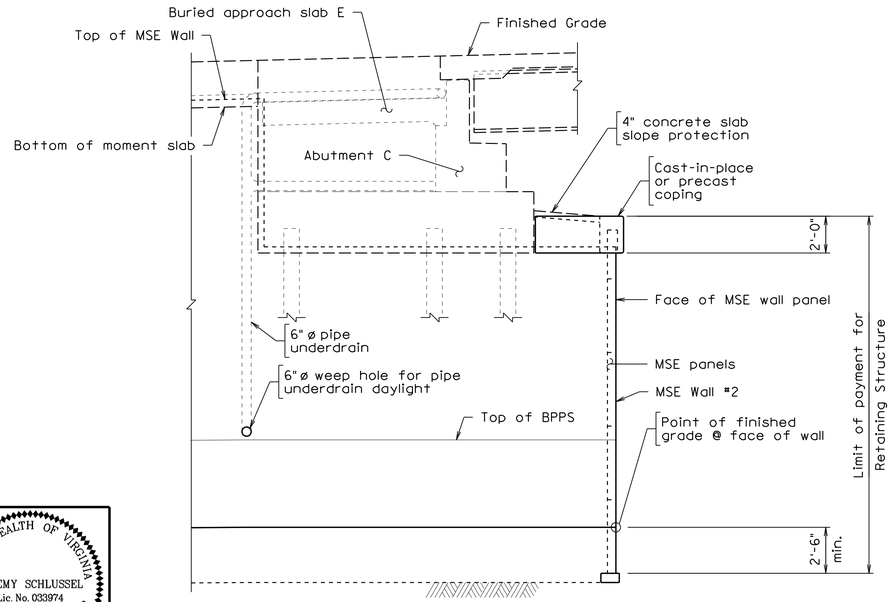

PART MSE WALL ELEVATION AT ABUTMENT C
Scale: ¼" = 1'-0"

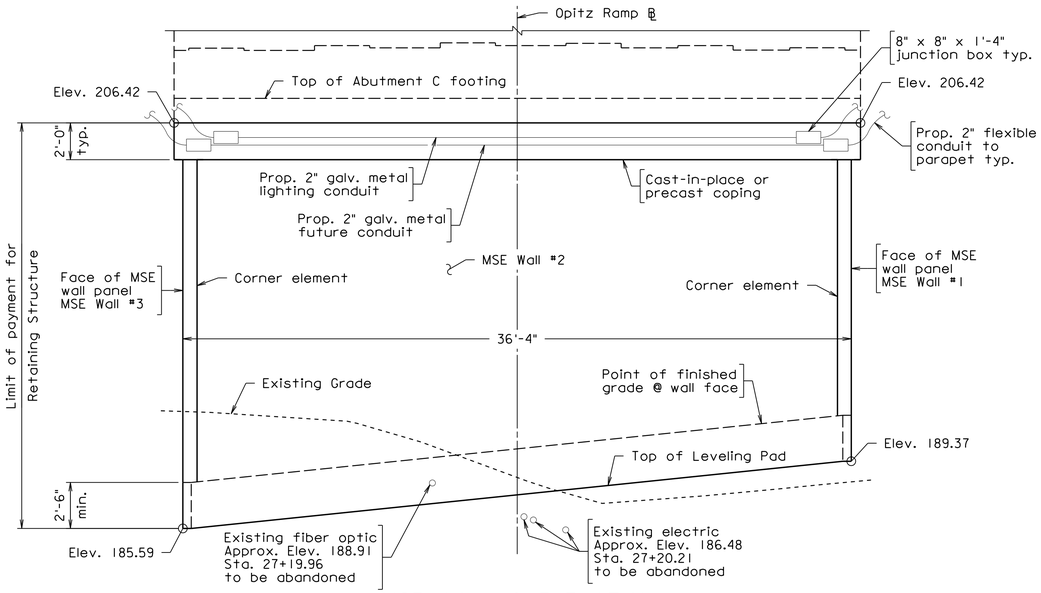

MSE WALL 2 ELEVATION
Scale: ¼" = 1'-0"

257-38A_125.dgn

COMMONWEALTH OF VIRGINIA
JEREMY SCHLUSSEL
Lic. No. 033974
PROFESSIONAL ENGINEER

Jeremy Schlussel
2022.07.08 19:09:52 -04'00'

WHITMAN REQUARDT & ASSOCIATES
RICHMOND, VA
STRUCTURAL ENGINEER

Scale: ⅜ " = 1'-0" unless otherwise noted.

© 2022, Commonwealth of Virginia

No.	Description	Date
	Revisions	

COMMONWEALTH OF VIRGINIA
DEPARTMENT OF TRANSPORTATION

STRUCTURE AND BRIDGE DIVISION

MSE WALL ELEVATIONS WALL 2 AND SECTIONS

Designed: MRD	Date	Plan No.	Sheet No.
Drawn: MRD	July 2022	257-38A	125 of 125
Checked: AC			